Feb. 10, 1942. L. R. LUDWIG ET AL 2,272,717

CIRCUIT INTERRUPTING DEVICE

Filed Sept. 19, 1939 7 Sheets-Sheet 1

Fig. 1.

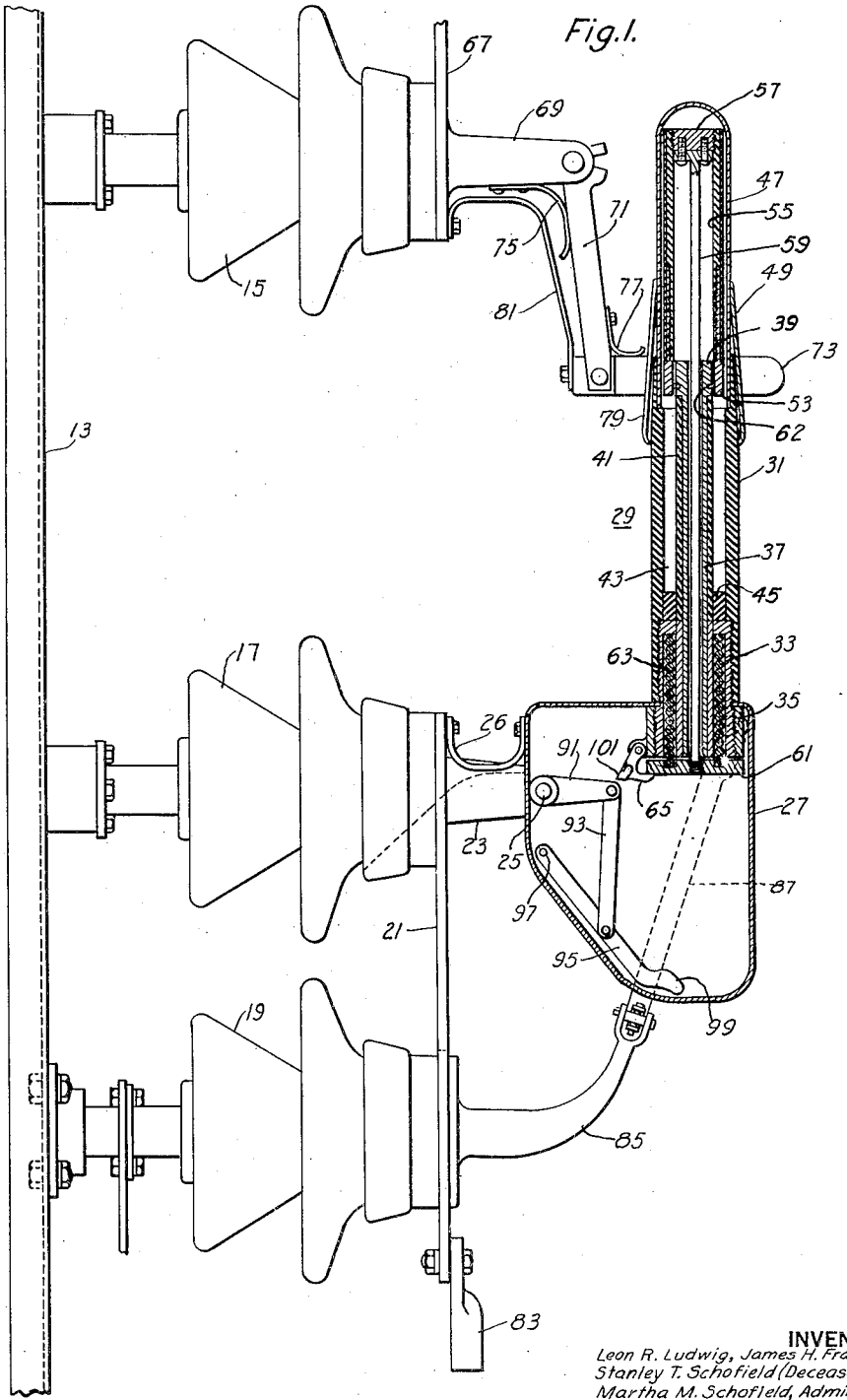

INVENTORS
Leon R. Ludwig, James H. Frakes and
Stanley T. Schofield (Deceased) by
Martha M. Schofield, Administratrix
BY
Ralph W. Swingle
ATTORNEY

Feb. 10, 1942. L. R. LUDWIG ET AL 2,272,717

CIRCUIT INTERRUPTING DEVICE

Filed Sept. 19, 1939 7 Sheets-Sheet 2

Fig. 2.

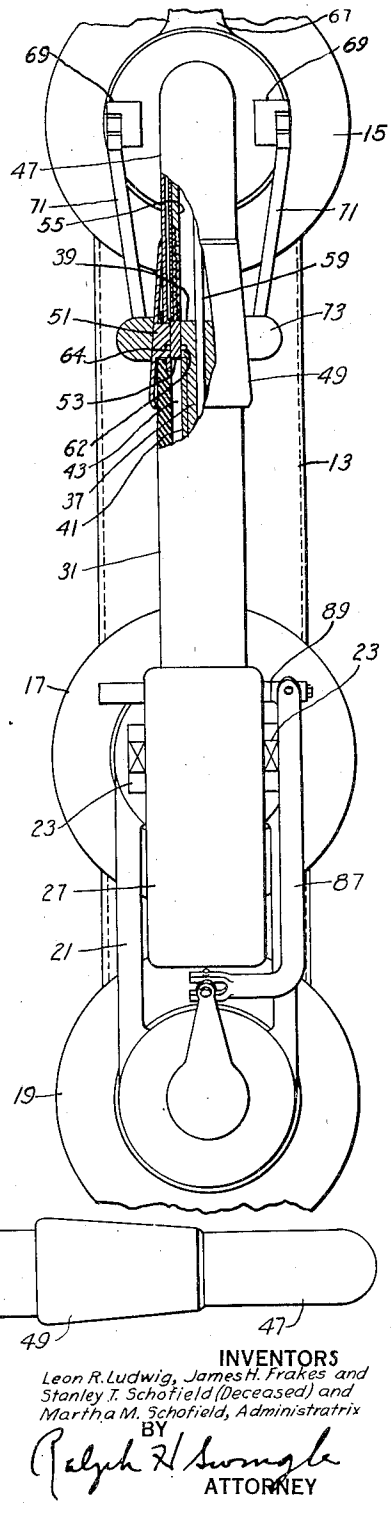

Fig. 3.

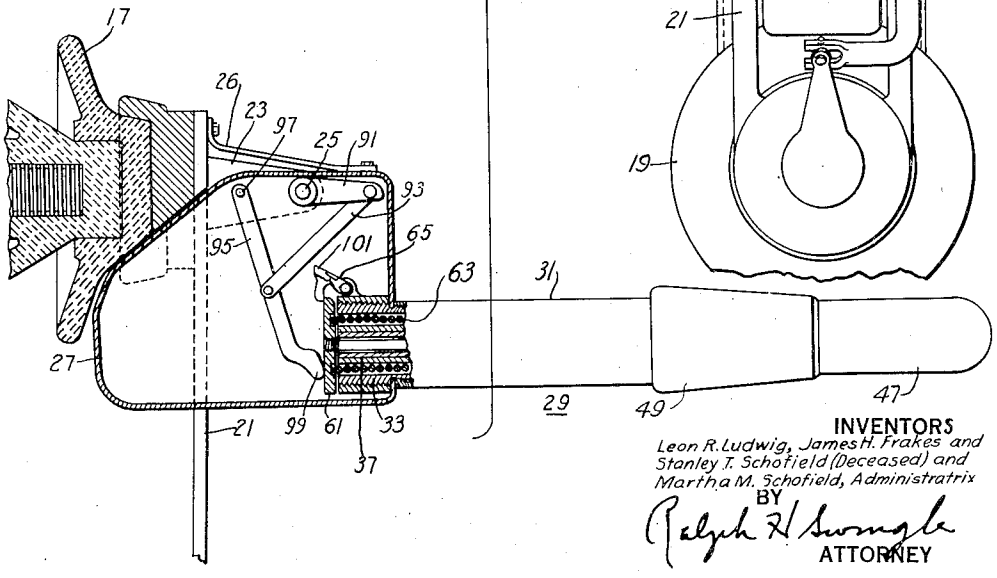

INVENTORS

Leon R. Ludwig, James H. Frakes and Stanley T. Schofield (Deceased) and Martha M. Schofield, Administratrix

BY

Ralph R. Swengle

ATTORNEY

Feb. 10, 1942. L. R. LUDWIG ET AL 2,272,717

CIRCUIT INTERRUPTING DEVICE

Filed Sept. 19, 1939 7 Sheets-Sheet 3

Fig. 4.

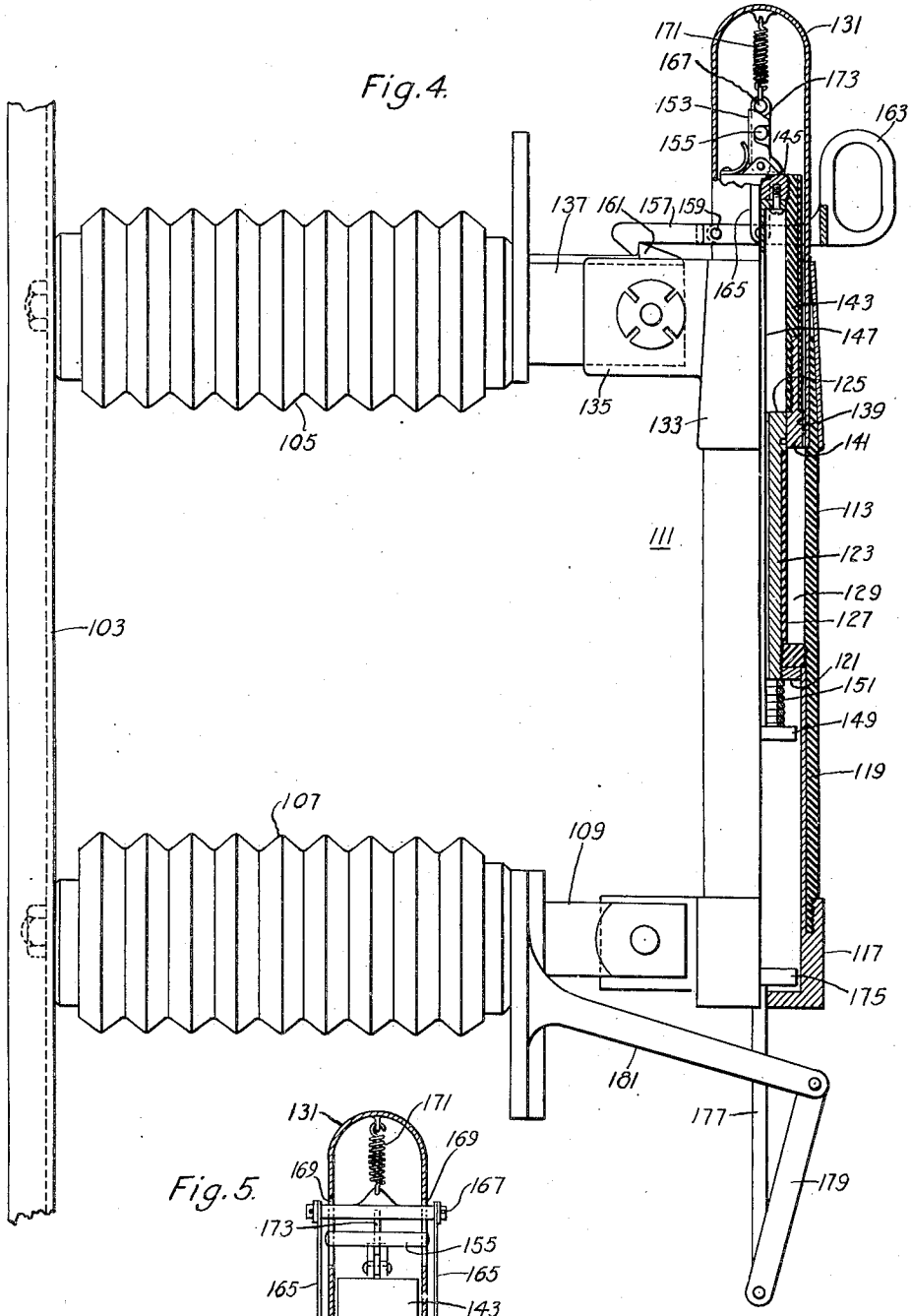

Fig. 5.

WITNESSES:
Fred C. Williams
Walter E. Mueller

INVENTORS
Leon R. Ludwig, James H. Frakes and Stanley T. Schofield (Deceased) by Martha M. Schofield, Administratrix
BY
Ralph H. Swingle
ATTORNEY

Feb. 10, 1942. L. R. LUDWIG ET AL 2,272,717

CIRCUIT INTERRUPTING DEVICE

Filed Sept. 19, 1939 7 Sheets-Sheet 4

Fig. 6.

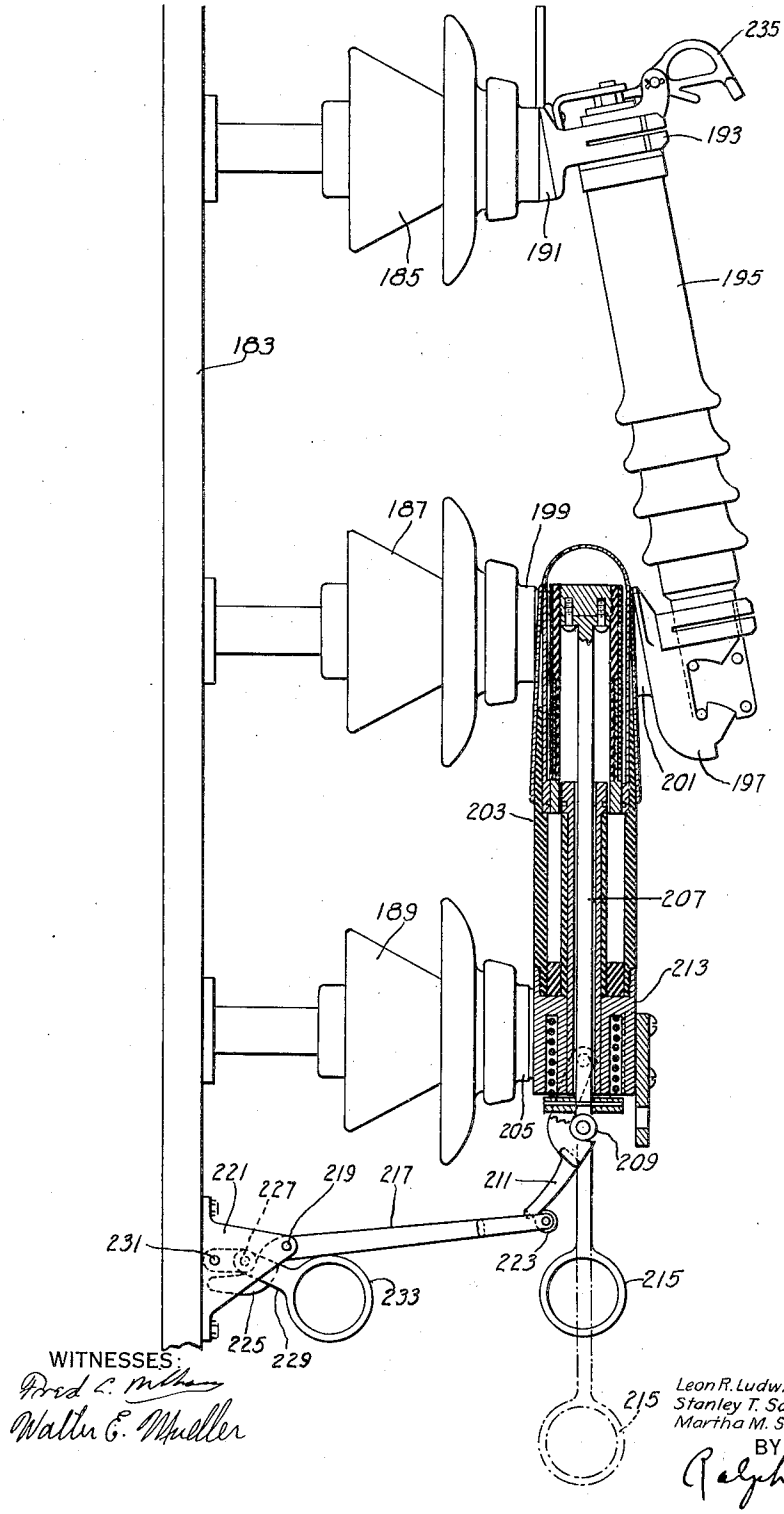

WITNESSES:
Fred C. Milham
Walter E. Mueller

INVENTORS
Leon R. Ludwig, James H. Frakes and
Stanley T. Schofield (Deceased) by
Martha M. Schofield, Administratrix
BY
Ralph H. Swingle
ATTORNEY

Feb. 10, 1942. L. R. LUDWIG ET AL 2,272,717

CIRCUIT INTERRUPTING DEVICE

Filed Sept. 19, 1939 7 Sheets-Sheet 5

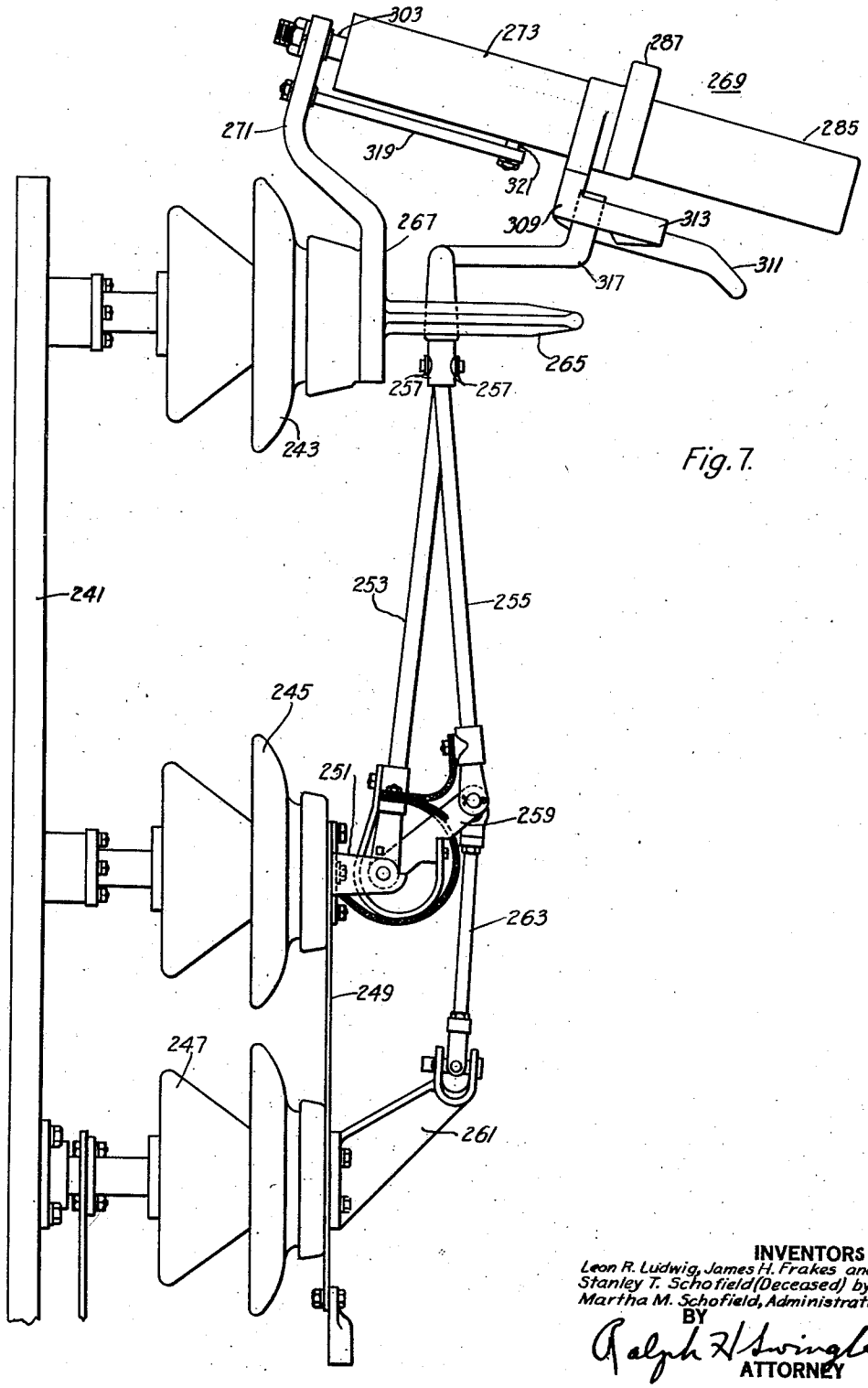

Fig. 7.

INVENTORS
Leon R. Ludwig, James H. Frakes and
Stanley T. Schofield (Deceased) by
Martha M. Schofield, Administratrix
BY
Ralph H. Swingle
ATTORNEY

Feb. 10, 1942. L. R. LUDWIG ET AL 2,272,717

CIRCUIT INTERRUPTING DEVICE

Filed Sept. 19, 1939 7 Sheets-Sheet 6

Fig. 9.

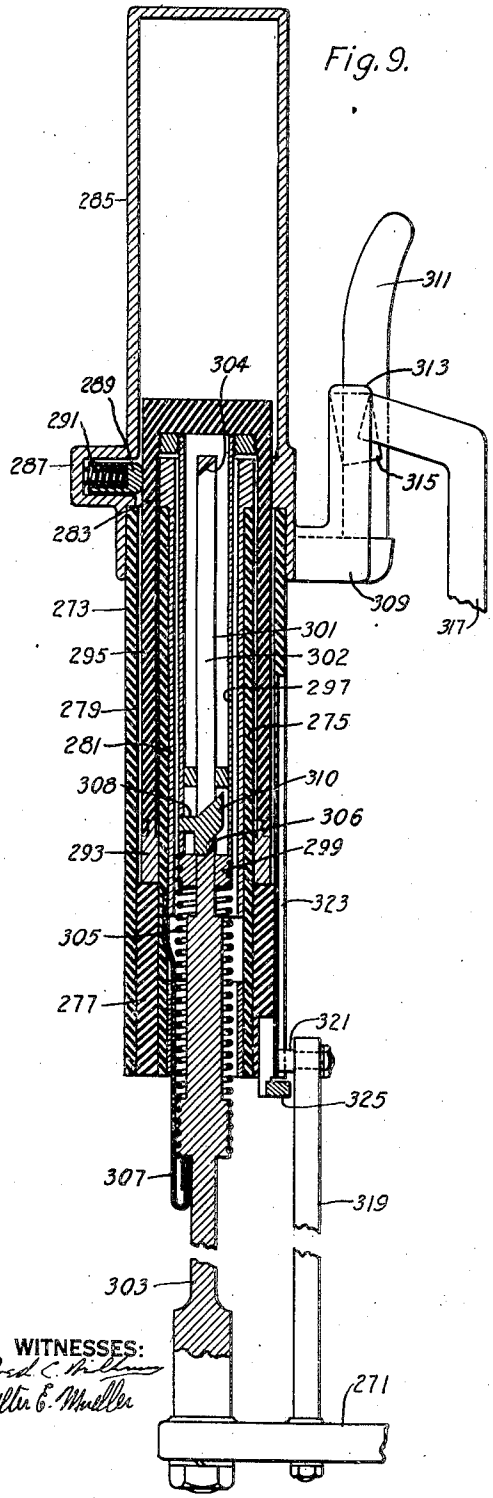

Fig. 8.

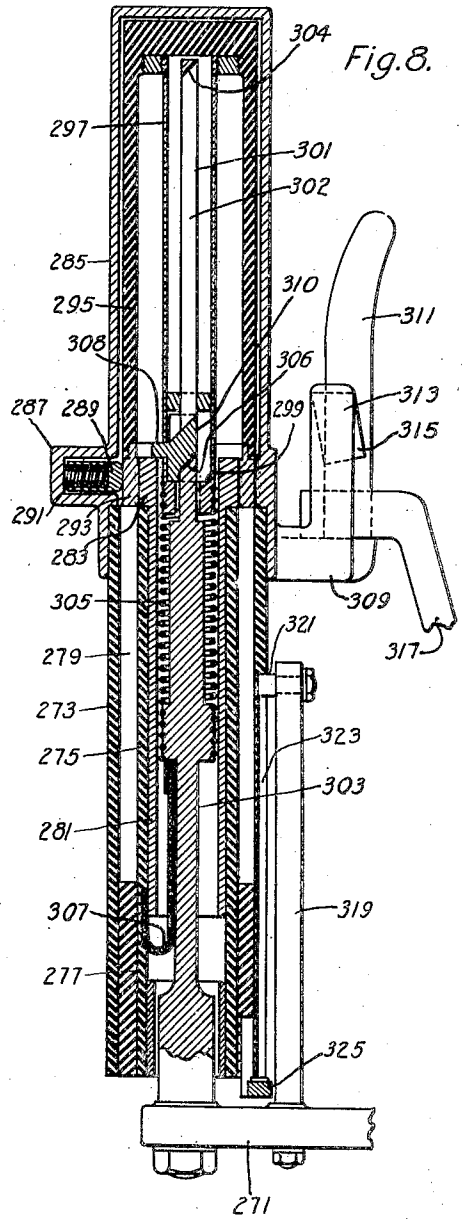

WITNESSES:
Fred C. Williams
Walter E. Mueller

INVENTORS
Leon R. Ludwig, James H. Frakes and Stanley T. Schofield (Deceased) by Martha M. Schofield, Administratrix
BY
Ralph H. Swingle
ATTORNEY

Feb. 10, 1942. L. R. LUDWIG ET AL 2,272,717

CIRCUIT INTERRUPTING DEVICE

Filed Sept. 19, 1939 7 Sheets-Sheet 7

Fig. 11.

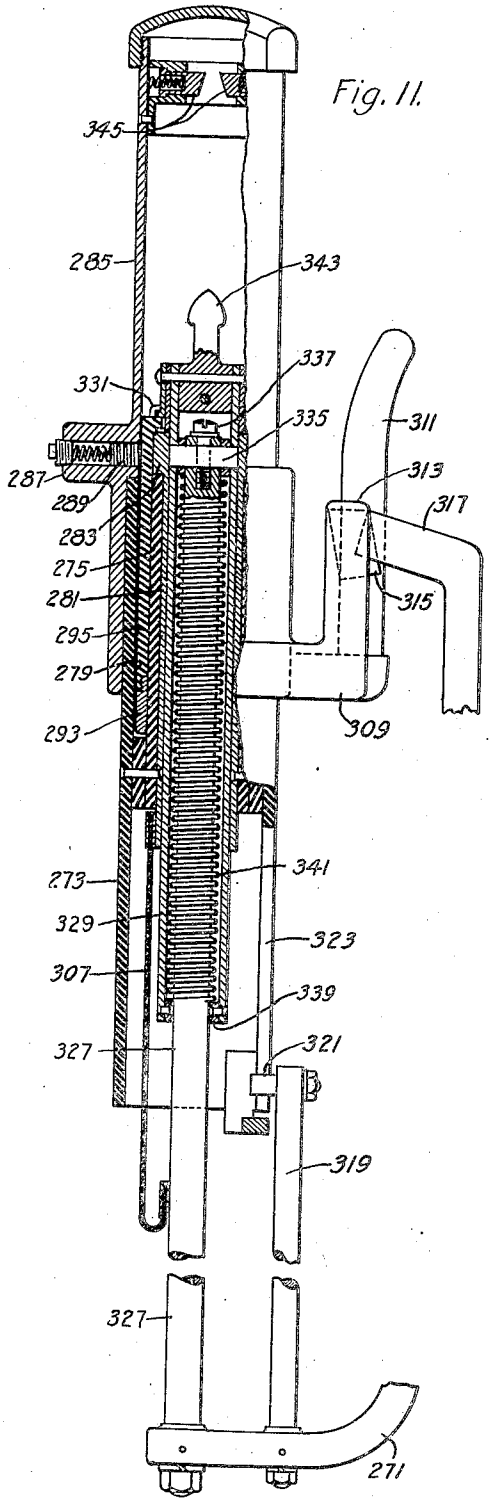

Fig. 10

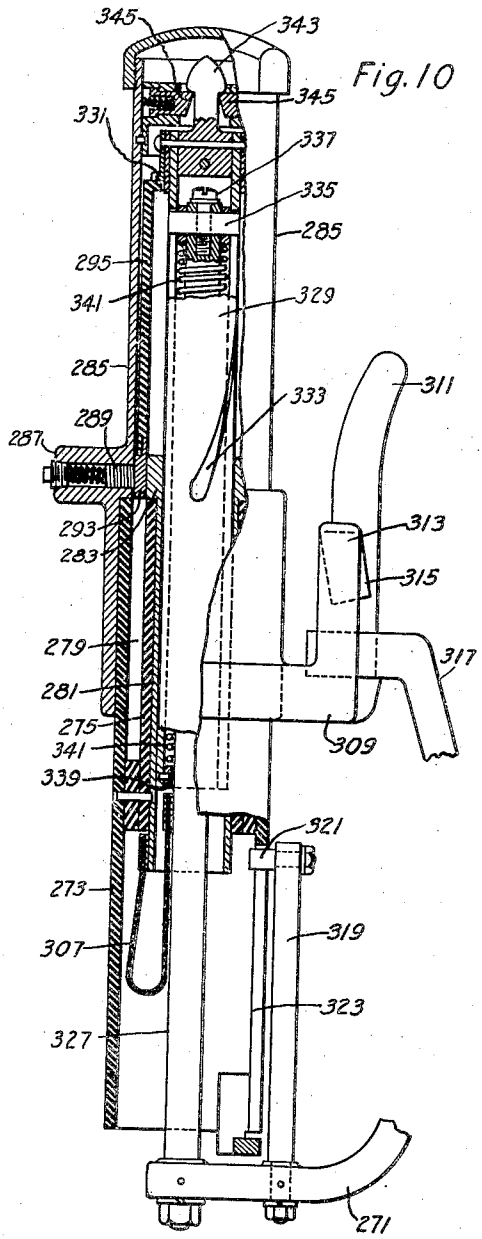

INVENTORS

Leon R. Ludig, James H. Frakes, and Stanley T. Schofield (Deceased) by Martha M. Schofield, Administratrix

BY

Ralph H. Swingle

ATTORNEY

Patented Feb. 10, 1942

2,272,717

UNITED STATES PATENT OFFICE

2,272,717

CIRCUIT INTERRUPTING DEVICE

Leon R. Ludwig, Wilkinsburg, and James H. Frakes, Edgewood, and Stanley T. Schofield, deceased, late of Wilkinsburg, Pa., by Martha M. Schofield, administratrix, Wilkinsburg, Pa., assignors to Westinghouse Electric & Manufacturing Company, East Pittsburgh, Pa., a corporation of Pennsylvania

Application September 19, 1939, Serial No. 295,590

57 Claims. (Cl. 200—48)

This invention relates to circuit interrupting devices and more particularly to disconnecting switches capable of interrupting load currents. In the transmission of electrical power, the disconnecting switch heretofore has been used mainly to isolate sections of a transmission line from each other or for isolating a load circuit from its associated network. The switching operation in most such instances necessarily had to be made under conditions of no-load on the circuit being disconnected. Even under conditions of no connected load, the high voltages now prevalent in transmission practice produce charging currents of appreciable magnitude. Attempts have been made to interrupt line charging currents and light load currents with disconnecting switches equipped with arcing horns. Although certain switches, particularly of the low-voltage type, have successfully interrupted charging and small load currents, their use for this purpose is unsatisfactory since the exposed arc drawn during the circuit opening operation may be blown across the line or to grounded parts thus causing the flow of fault currents.

The main object of our invention is to provide a disconnecting switch capable of interrupting load and charging currents of a transmission line without the external display of an arc or flame.

Another object of our invention is to provide a circuit interrupting device capable of interrupting load currents and having a form suitable for movement as a whole into and out of engagement with at least one line terminal so as to insert an appropriate air gap in the circuit following circuit interruption.

A further object of the invention is to provide a load break disconnecting switch wherein a movable blade means for establishing an air break in the circuit completely encloses separable contacts which are actuated to the open circuit position in response to the initial movement of the blade means to the disconnect position.

A more specific object of the invention is to provide a load break disconnecting switch having separable contacts and an arc extinguishing structure enclosed in a movable blade structure wherein the contacts are actuated to the open circuit position prior to movement of the blade structure out of the connected circuit.

Still another object of the invention is to provide operating means for a load break disconnecting switch of the aforesaid type which sequentially causes the contacts to separate at a speed independently of the speed at which the operating means is moved and then moves the blade structure to the disconnect position.

A further object of the invention is to provide a circuit protective device embodying two serially related circuit interrupting units capable, respectively, of interrupting load and overload currents, and at least one of which is movable out of the circuit for inserting a disconnect gap therein.

It is also an object of our invention to provide a novel circuit interrupting unit of the enclosed type suitable for operation with disconnect switches of conventional form for converting such switches to load break devices.

Other objects and advantages will appear more fully in the following description, when taken in connection with the accompanying drawings, in which:

Figure 1 is a side view of a load break disconnecting switch of our invention showing the movable blade means in longitudinal section;

Fig. 2 is a front view partially in section of the switch shown in Fig. 1;

Fig. 3 is a side view showing the switch of Fig. 1 in the open circuit position;

Fig. 4 is a side view partially in section of a hook stick operated indoor type load break disconnecting switch embodying our invention;

Fig. 5 is a fragmentary view partially in section of the upper end of the blade member of the switch shown in Fig. 4 and is taken at right angles to the position illustrated in that figure;

Fig. 6 is a side view illustrating the circuit interrupter of our invention when used in conjunction with an overload protective device such as a fuse;

Fig. 7 is a side view showing another form of load break disconnecting switch embodying our invention;

Fig. 8 is an enlarged sectional view of the circuit interrupting unit of the switch shown in Fig. 7 showing the contacts of the interrupting unit in the closed circuit position;

Fig. 9 illustrates the relative position of the various parts of the interrupting unit of Fig. 8 when that unit is in the open circuit position;

Fig. 10 is an enlarged sectional view of a modified form of circuit interrupting unit as may be employed in the switch structure shown in Fig. 7; and

Fig. 11 is a sectional view of the interrupting unit of Fig. 10, showing the parts thereof in the open-circuit position.

Referring to Figs. 1, 2 and 3 of the drawings, the reference number 13 designates a base which

carries insulators 15, 17 and 19 disposed in spaced relation with respect to each other, as shown. The free ends of the insulators 17 and 19 are joined by a conducting support member 21. The support member 21 carries a pair of spaced brackets 23 having a cross shaft 25 extending therebetween adjacent their outer ends. Journalled for pivotal movement on the shaft 25 is a casing 27 of conducting material which carries a hollow blade member generally indicated at 29. The blade member 29 comprises a tubular member 31 of insulating material screw threaded onto a metallic sleeve 33. The sleeve 33 extends through a suitable aperture into the casing 27 and has a threaded collar 35 which secures portions of the upper wall of the casing 27 against the tubular member 31.

A tubular conducting member 37 is concentrically disposed within the insulating member 31 and makes contacting engagement at its lower end with the tubular member 33. The upper end of the member 37 has a flanged portion 39 which serves as one of the contacts within the tubular blade member 31. A sleeve of insulating material 41 surrounds the tubular conducting member 37 so as to provide an annular arc passage 43, the outer wall of which is defined by the tubular insulating member 31. The lower end of the arc passage 43 is closed by an annular member 45 of insulating material abutting the conducting sleeve 33. Secured to the upper end of the insulating tube 31 is a tubular cap member 47 of conducting material. Surrounding the cap member 47 is a conically shaped sleeve 49 also of conducting material which projects downwardly so as to overlap the upper end portion of the insulating member 31.

The conical sleeve 49 carries at least two inwardly projecting diametrically-opposed contact segments 51, (Fig. 2) which project through suitable apertures formed in the members 31 and 47. Normally disposed between the contact segments 51 and the contact portion 39 is a movable contact ring 53 carried by the lower end of a movable tubular barrier member 55 of insulating material. The barrier member 55 is closed at its upper end by the member 57 to which is secured an operating rod 59 having sliding movement through the tubular conducting member 37. The lower end of the operating rod 59 has secured thereto a disc 61. A compression spring 63, one end of which bears against the upper end of the metallic sleeve 33 and the other end against the disc 61, biases the operating rod 59 downwardly so as to move the barrier member 55 and its associated contact 53 into the arc passage 43. The contact 39 and the contact segments 51 are provided with grooves 62 and 64 so as to confine arcing to the lower portions thereof thereby preserving the upper portions against the erosive effects of the arc. Movement of the operating rod 59 is normally prevented by means of a latch 65 pivotally carried by the sleeve 35. The method of releasing the latch 65 for the purpose of separating the contacts within the blade member 29 will appear more fully hereinafter.

The insulator 15 carries a terminal member 67 having two outwardly extending supports 69 thereon. Pivoted to the supports 69 and having limited swinging movement therewith are a pair of arms 71. The free ends of the arms 71 support a U-shaped contact yoke 73 which is also mounted for limited pivotal movement with respect to the arms. The contact yoke 73 has an inner contact receiving surface which tapers inwardly in the upward direction and is adapted to receive the conical sleeve portion 49 of the blade member 29. A spring 75 tends to cause arms 71 to rotate in a counter-clockwise direction as viewed in Figs. 1 and 3, about their pivotal supports. The spring 77 in a similar manner biases the contact yoke 73 for clockwise rotation about its pivotal support at the ends of the arms 71. The purpose of this particular construction will appear more fully hereinafter.

When the blade member 29 is in the position shown in Fig. 1, the conical sleeve 49 is tightly wedged into the contact yoke 73 so that the contact segments 51 exert a high pressure against the moving contact 53 which, in turn, makes high pressure contact with the fixed contact portion 39. Flexibility within the conical sleeve 49 is attained by slotting the left hand side thereof, as more clearly shown at 79 in Fig. 1. The contact ring 53 is also preferably slotted to impart flexibility thereto and thereby permit the above-mentioned high pressure contact action. Thus the circuit through the interrupter proceeds from the terminal 67, shunt 81 to the contact yoke 73, contacts 51, 53, 39, conducting member 37, conducting sleeve 33, casing 27, shunt 26, support 21, and finally terminates with a line terminal 83 secured to the support member 21.

In order to operate the blade member 29 to the open and closed position, the insulator 19 is mounted for rotative movement with respect to the base 13 and is journaled at its free end in the conducting support plate 21. Secured to the outer end of the insulator 19 is an operating arm 85 having an operating link 87 pivotally coupled thereto, as by a universal joint or the like. The other end of the operating link 87 is pivotally coupled in a like manner to a boss 89 secured to the side of the casing 27, as more clearly shown in Fig. 2. It will thus be seen that since the casing 27 is pivotally mounted upon the cross shaft 25, rotation of the insulator 19 in the clockwise direction, as viewed in Fig. 2, will cause the link 87 to rotate the casing 27 about the cross shaft 25 and in a clockwise direction to the position shown in Fig. 3. The cross shaft 25 is fixedly secured to the brackets 23 so as to prevent rotation thereof with respect to the brackets. Fixedly secured to the cross shaft 25 and disposed in a horizontal direction, as shown in Figs. 1 and 3, is an actuating arm 91. Coupled to the free end of the arm 91 is an actuating link 93, the other end of which is pivotally connected to the intermediate portion of an operating lever 95. The operating lever 95 is pivoted at 97 to the casing 27 and has its free end provided with an abutment 99.

From the relation of the parts shown in Fig. 1, it will be observed that as the casing 27 and the tube 29 begin to rotate in a clockwise direction, the latch 65 through its pivoted trigger member 101 engages the operating arm 91, thus rotating the latch 65 in a clockwise direction to release the disc 61, thereby permitting the spring 63 to actuate the operating rod 59 downwardly carrying with it the movable contact ring 53 and the insulating barrier 55. An arc will be drawn in the arc passage 43 which is confined to the narrow clearances between the three concentric tubes 31, 55 and 41. Although contact 53 is subjected to relatively high lateral pressure when engaged, spring 63 is strong enough to cause longitudinal sliding of contact 53 when latch 65 is released. The concentric tubular members 31, 41 and 55 are preferably constructed of insulating material

which evolves considerable gas when acted upon by an arc to aid in extinguishing the arc, for example, hard fiber has been found a suitable material for this purpose. As the barrier member 55 moves into the annular arc passage 43, the arc gases are driven through the arc stream and must escape to the space provided within the enclosed cap member 47. This metallic cap member 47 serves as a condenser for the arc gases escaping from the space between the barrier 55 and the tubular member 33. Inasmuch as the operating rod 59 permits some gas to escape therealong through the tubular conductor 37 into the casing 27, the latter also serves as a completely enclosed condensing chamber.

Tripping of the latch 65 causes the contacts to open within the blade member 29 at a high speed which is independent of the speed of movement of the actuating insulator 19. In fact, the contacts within the blade member 29 are moved to the open circuit position and the arc is extinguished prior to separation of the conical sleeve 49 from the contact yoke 73. Contact between blade member 29 and the yoke 73 continues during the initial opening movement of the blade member 29 by virtue of the pivotal linkage 71 supporting the contact yoke 73. Thus the yoke 73 remains in contact with the sleeve 49 until the yoke reaches the position shown in Fig. 3. It will thus be seen that the circuit is completely interrupted within the blade member 29 prior to disengagement of the member from the contact yoke 73.

When the operating rod 59 reaches its full open position, it bears against the abutment 99 of the operating lever 95. As the blade member 29 is rotated to the open circuit position, the connecting link 93 causes the operating lever 95 to move the operating rod 59 inwardly with respect to the blade 29 until the disc 61 is again engaged by the latch 65, thereby relatching the contacts within the blade member in the closed circuit position at such time when the blade member reaches its full-open position, as shown more clearly in Fig. 3. As the blade member 29 is again brought to the closed circuit position by rotation of the insulator 19 in the counter-clockwise direction, as viewed in Fig. 2, the conical sleeve 49 engages the contact yoke 73 while the latter is in the position shown in Fig. 3.

It will be apparent that continued rotation of the blade 29 in a counter-clockwise direction, as viewed in either Fig. 1 or 3, will cause movement of the yoke 73 downwardly with respect to the sleeve 49, thereby securing a high pressure wiping contact which also exerts a high pressure on the inner contacts 51, 53 and 39. As the blade member 29 moves into its final closed circuit position, the latch 65 clears the actuating arm 91 because the trigger member 101 is pivotally mounted upon the latch 65 for rotative movement in the counter-clockwise direction and is biased for rotation in the clockwise direction against a suitable stop, as shown in Fig. 1. The latch 65 is thus in readiness for a subsequent opening operation on the contacts within the blade member 29.

In Figs. 4 and 5 are shown a modified form of load break disconnecting switch which is more particularly adapted for indoor service and is hook stick operated to the open and closed circuit position. As shown in Fig. 4, the base 103 carries spaced insulators 105 and 107. The insulator 107 carries a terminal support 109 to which is pivotally mounted for swinging movement a blade member generally indicated at 111. The blade member 111 comprises a tubular member 113 of insulating material secured at its lower end to a metallic ferrule 117. The ferrule 117 has a metallic sleeve 119 extending upwardly into the insulating tube 113 and is joined with a metallic collar 121 which, in turn, supports a tubular conducting member 123, the upper end of which has a contact portion 125. The tubular conducting member 123 is surrounded by a tubular sleeve 127 of insulating material so as to form an annular arc passage 129 similar to the arc passage 43 previously described in connection with Figs. 1 to 3.

A metallic closure cap 131 closes the end of the tube 113. Surrounding the lower end of the cap 131 and also overlapping the end of the insulating tube 113 is a metallic sleeve member 133 having a pair of blade members 135, only one of which is shown, adapted to engage the opposite sides of a single blade terminal 137 carried by the insulator 105. The cap 131 has an annular contact portion 139 disposed at the lower end thereof opposite the contact portion 125 of the tubular conductor 123. An annular movable contact 141 is normally positioned in bridging relation with respect to the contacts 125 and 139 and is carried by the lower end of a movable barrier member 143 of insulating material. The upper end of the barrier 143 is closed by a threaded plug 145 to which is secured the upper end of an operating rod 147.

The operating rod 147 extends downwardly through the tubular conductor 123 and is provided at its lower end with a disc 149. Disposed between the disc 149 and the tubular conductor 123 is a spring 151 for moving the contact 141 and the barrier 143 into the arc chamber 129. The contact 141 and the barrier 143 are normally held against movement by the spring 151 by a movable latch member 153 engaging a latch pin 155 extending transversely of the cap member 131.

When the switch is in the position shown in Fig. 4, the circuit thereto proceeds through the terminal member 137, the blade 135, sleeve 133, cap member 131, contacts 139, 141, 125, tubular conductor 123, collar 121, sleeve 119, ferrule 117 to the lower terminal member 109. The blade member 111 is held in the closed circuit position against accidental opening by heavy currents flowing therethrough by means of a latch lever 157, pivoted to the closure cap 131 at 159. The left hand end of the latch lever 157 engages a catch 161 forming an upward extension of the terminal 137. The latch lever 157 has two branches extending one on each side of the closure cap 131 which unite on the right hand side thereof and terminate in a loop 163 which serves as a means for engaging the customary hook stick for operating the blade member 111 to open and closed circuit positions. The latching lever 157 is also pivotally connected by a pair of upstanding links 165 to a transversely extending release bar 167. The release bar is adapted to slidably operate in slots 169 provided on diametrically opposite sides of the cap 131 and is biased in the upward direction by a spring 171.

The operation of the device is as follows: With the parts in the position as shown in Fig. 4 during normal load carrying conditions, the circuit is interrupted by first inserting the hook stick in the loop 163 and pulling downwardly on the stick so as to rock the latch lever 157

about its pivotal axis 159. The rotation of the latch lever 157 about the pivot 159 in the clockwise direction releases the lever from the catch 161 and also actuates the links 165 downwardly causing the release bar 167 to engage the upper cam surface 173 of the latch 153, forcing the latch 153 to the left, out of engagement with the bar 155, thereby releasing the operating rod 147, whereupon the spring 151 actuates the movable contact 141 and the barrier 143 downwardly into the arc chamber 129. The arc thus drawn in the confined annular spaces on either side of the barrier member 143 is quickly extinguished in the manner previously described in connection with the structures shown in Figs. 1 to 3.

Upon the release of the moving contact member 141 by the downward movement of the loop 163 and also the simultaneous release of the latch lever 157 from the catch 161, it is apparent that an outward movement of the loop 163 will cause the blade member 111 to be rocked about its lower pivotal support to the open circuit position. In the open circuit position the disc 149 secured to the lower end of the operating rod 147 rests against a similar disc 175 secured to the upper end of a rod 177 extending through the lower end of the ferrule 117. The lower end of the rod 177 is connected by a link 179 to a fixed bracket arm 181 mounted upon the contact terminal 109 carried by the insulator 107. The bracket 181, the linkage 179 and the rod 177 are so arranged with respect to the blade member 111 that upon movement of the latter to the full open circuit position, the rod 177 is moved inwardly with respect to the blade member 111 to cause the operating rod 147 to be moved to the closed circuit position so that the pivotal latch 153 again is forced to engage the bar 155, thus reseating the contacts within the blade member 111 for a subsequent circuit opening operation.

In Fig. 6 we have shown a circuit interrupting structure embodying the principles heretofore described in conjunction with an overload protective device which also serves to function as a circuit disconnect. In Fig. 6, a base 183 carries three insulators 185, 187 and 189. Mounted upon the insulator 185 is a line terminal member 191 having a contact clip 193 which engages the upper end of a fuse 195 which may be of the type shown in H. L. Rawlins Patent No. 1,976,634, issued October 9, 1934. The fuse 195 is pivotally mounted at its lower end to a bracket extension 197 carried by a terminal 199 supported upon the insulator 187. The terminal 199 also has a yoke-like member 201 embracing the upper end of a circuit interrupting unit 203. The lower end of the interrupting unit 203 is secured to, and supported by, a conducting terminal 205 carried by the insulator 189. It will be noted that the interrupting unit 203 in this instance is similar in construction to the blade member 111 shown in Fig. 4, except that the operating rod 207, which corresponds to the rod 147 in Fig. 4, is provided with a roller type catch 209 which is adapted to engage a latching lever 211, which is pivoted at its upper end to the side of the ferrule 213 of the interrupting unit 203. The operating rod 207 also has a lower extension which terminates in a loop 215 for the insertion of a hook stick to render the rod manually operable.

The circuit through the protective device, as shown in Fig. 6, proceeds from the terminal 191 through the fuse tube 195, the bracket 197, terminal 199, interrupting unit 203, to the terminal 205. To interrupt the circuit while carrying normal load currents, it is necessary to actuate the latch lever 211 to release the operating rod 207. This is accomplished by a lever 217 pivoted at 219 to a bracket 221 secured to the base 183. The right-hand end of lever 217 has a roller 223 normally engaging the lower side of the latch lever 211. The left hand end of the lever 217 has an offset portion 225 adapted to be engaged by a roller 227 journalled in an actuating lever 229 which is also pivotally mounted at 231 to the bracket 221. The actuating lever 229 is provided with an operating ring or loop 233 into which a hook stick may be inserted for moving the lever 229 downwardly, thus rocking the lever 217 in the counterclockwise direction, causing the roller 223 to engage the latch lever 211, raising the same to release the roller 209 and thus permit the operating rod 207 to be moved to the open circuit position. Closing of the contacts within the circuit interrupter 203 is accomplished by inserting a hook stick in the loop 215 and forcing the rod upwardly until the latch 211 again engages the roller 209.

When the circuit through the interrupter 203 has been opened in the manner described, the fuse tube 195 may be swung about its lower pivotal support by the insertion of a hook stick in its operating ring 235 in the usual manner. In the event that an overload occurs in the circuit, the fuse 195 blows and interrupts the circuit, thereby also providing overload protection. It is thus seen that by this simple arrangement of mounting the fuse structure 195 and the circuit interrupting device 203 upon three insulators, one of which serves as a common support for the two interrupting units, economy in mounting structure is obtained and a protective device is provided which serves to interrupt the circuit on both load and overload currents. In addition, means are provided for placing an appreciable air gap in the circuit for isolating the load circuit from the transmission line without providing for movably mounting the load break device.

In Fig. 7 a circuit interrupting unit embodying the features of our invention is shown applied to a more or less conventional disconnect switch. The disconnect switch shown in Fig. 7 is fully shown and described in H. J. Crabbs' Patent No. 2,067,659, issued January 12, 1937, and assigned to the assignee of the instant application. As set forth in the above-named patent, the disconnect switch proper comprises a base 241 upon which are mounted three spaced insulators 243, 245 and 247. The insulators 245 and 247 are joined by a conducting support plate 249, to which one terminal of the switch is connected. The insulator 245 also carries a pair of upstanding brackets 251, only one of which is shown and to which is pivotally mounted for swinging movement a blade member 253. A second blade member 255, joined near its outer end to the blade member 253 by a pair of links 257, is connected at its other end to a link 259, which, in turn, joins the pivotal axis of the blade 253. The insulator 247 is mounted for rotative movement and has an actuating arm 261 secured thereto which is universally connected by means of an operating link 263 to the pivotal connection of blade 255 and arm 259. The free ends of the blades 253 and 255 are adapted to be engaged by a U-shaped con-

tact yoke 265 carried by a terminal 267 mounted upon the insulator 249. It will be apparent that rotation of the insulator 247 will first cause the link 263 to actuate the blade 255 longitudinally with respect to the blade 253, so as to release the high pressure engagement between the ends of the blades 253 and 255 with the contact yoke 265. Further rotation of the insulator 247 following the cessation of relative longitudinal movement of the blades will cause the blades to rotate about the pivotal axis of the blade 253 to the open circuit position. Rotation of the insulator in the opposite direction causes the blades 253 and 255 to move as a unit into engagement with the U-shaped contact 265, whereupon the final rotative motion of the insulator 247 produces relative longitudinal motion of the blades 253 and 255, which motion cooperating with the links 267 causes the ends of the blades to expand and move into high pressure engagement with the contact 265.

In order that the disconnect switch, as described, may be able to interrupt load currents, we have provided a circuit interrupting unit generally indicated at 269; in this instance mounted upon a bracket 271 which is an extension of the terminal 267 carried by the insulator 249. The interrupting unit 269 is more clearly shown in Fig. 8, which, for the purpose of conserving space, has been illustrated with its longitudinal axis coinciding with the vertical axis of the drawing.

The circuit interrupting unit 269 comprises an outer tube 273 of insulating material and an inner tube 275 also of insulating material held in concentric spaced relation by an insulating sleeve 277 disposed between the tubes 273 and 275 adjacent one end thereof. The tubes 273 and 275 and the sleeve 277 form an annular arc passage 279 open at the upper end and closed at the lower end and having walls of gas forming material. Inside the tube 275 and secured thereto is a tube 281 of conducting material, the upper end of which carries a contact ring 283. Secured to the upper end of the outer tube 273 is a cylindrical cap-like closure 285 of conducting material. The closure member 285 has a hollow flange 287 extending partially thereabout in which are positioned a plurality of contact segments 289, spring biased by the springs 291 in a radial direction towards the contact 283. Disposed between the contact 283 and the segments 289 is a movable contact 293 of annular form secured to the lower end of a tubular barrier member 295 of insulating material such as fiber. The barrier member 295 is secured at its upper end to a tubular operating member 297. The lower end of the operating member 297 has a portion 299 having an inside diameter materially less than the remainder of the member for the purpose of guiding the member in sliding relation over a guide rod 301. The guide rod 301 is an extension of the support rod 303 secured at its lower end to the conducting bracket 271, as shown. The operating member 297 is operatively coupled to the support rod 303 by a coil spring 305. The support rod 303 is also joined electrically to the tubular conductor 281 by a flexible shunt 307.

From the foregoing, it will be apparent that the circuit interrupting unit 269 is movable axially of the support rod 303. The guide rod 301 is provided with a longitudinally extending slot 302, the respective ends of which terminate in sloping cam surfaces 304 and 306, respectively. A radially extending latch 308 is mounted within the operating member 297 and extends outwardly therefrom to engage the upper end of the ring contact 283. Latch 308 also has a cam portion 310 which is slidably operative in the slot 302, the purpose of which will appear more fully hereinafter.

In the position as shown in Fig. 8, the latch 308 maintains the operating member 297 in a predetermined position with respect to the contacts 283 and 289, thereby maintaining the movable contact 293 in alignment with the contacts 289 and 283 against the biasing action of the spring 305.

The metallic cap member 285 is provided with an offset forked bracket 309 having two upstanding blade elements 311 and 313. The element 313 has the end portion 315 looped back and in a direction towards the element 311, the purpose of which will be fully explained hereinafter. The forked bracket 309, which is of conducting material, is adapted to cooperate with an angular actuating member 317 forming an extension of the blade 253.

When the switch is in the position as shown in Fig. 7, a conducting circuit exists from the terminal 267 through the contact 265, blades 253 and 255 to the conducting plate member 249. A conducting circuit also exists from the terminal 267 through the conducting bracket 271, the support rod 303, flexible shunt 307, tubular conducting member 281, contact 283, contact 293, contact 289, the cap member 285, forked bracket 309, operating arm 317 to the blade 253 and the conducting plate 249. If it is desired to open the switch under conditions of load, the insulator 247 is rotated in the usual manner and the actuating arm 317 is moved into engagement with the looped end of the blade element 313. As the blades 253 and 255 move out of engagement with the contact 265, the current proceeds through the interrupter 269 traversing the several parts previously enumerated. Further movement to the open circuit position of the blade 253 causes the interrupting unit 269 to be moved with respect to the support rod 303 against the biasing action of the spring 305. Movement of the interrupting unit 269 in this manner continues until the cam member 310 of the latch 308 engages the upper cam surface 304 on the rod 301. When this engagement takes place the latch member 308 is moved to the right until it clears the upper surface of the contact 283, thus releasing the operating member 297 and permitting the spring 305 to move this member downwardly, carrying with it the barrier member 295 and the movable contact 293. An arc is thus established between the contacts 283 and 289 and drawn into the annular arc passage 279 where it is quickly extinguished. As the blade 253 with its attached actuating arm 317 continues to move toward the open circuit position, the end of the arm 317 slides out of engagement with the end of the blade element 313 and forms a large disconnecting gap in air between the element and the actuating arm.

Movement of the interrupting unit 269 beyond a predetermined limit is prevented by a guide rod 319 supported by the bracket 271, having a stop pin 321 slidably operative in a slot 323 in the side wall of the outer tube 273. Movement of the tube 273 beyond the stop pin 321 is prevented by a stop member 325 disposed at the lower end of the slot 323. During the closing operation of

the switch, the actuating arm 317 passes along the blade element 311 between the elements 311 and 315, thereby forcing the interrupting unit 269 again towards its support bracket 271. As the closed circuit position is approached, the cam portion 310 of the latch 308 engages the cam surface 306 at the lower end of the slot 302 so as to force the latch 308 to the left after the movable contact 293 has been brought in registration with the contacts 283 and 289. The contact structure, therefore, is again in the closed circuit position in readiness for a subsequent opening operation.

Fig. 10 illustrates another form of circuit interrupting unit which is similar to the unit shown in Fig. 8, except that the support rod 303 has been replaced by a support rod 327 of uniform cross section. Surrounding the support rod 327 is a tubular operating member 329, the upper end of which makes a swivel connection at 331 with the upper end of the movable barrier member 295. The operating member 329 is also provided with a pair of diametrically opposed helical slots 333 into which the opposite ends of a guide pin 335 extend. The guide pin 335 is held fixed with respect to the support rod 327 and is mounted at the upper end thereof by a screw 337. The lower end of the operating member 329 has an inwardly extending flange 339 for engaging one end of a compression spring 341 surrounding the rod 327. The other end of the spring 341 presses against the support for the guide pin 335. It will thus be seen that the spring 341 tends to urge the operating member 329 downwardly carrying with it the barrier member 295 and the moving contact 293.

Movement of the operating member 329 is prevented by a bayonet latch 343 secured to the upper end of the operating member 329 which engages two inwardly extending spring pressed catch members 345. Thus when the interrupting unit is moved as a whole during the switch opening operation as previously described with respect to the support rod 327, and against the compression of spring 341, the operating member 329 will be rotated about its longitudinal axis with respect to the catch members 345. The pitch of the helical slots 333 is so chosen that the operating member 329 and the bayonet latch 343 will have rotated substantially 90° when compression of the spring 341 is complete. When the bayonet latch 343 has rotated 90° from the position shown in Fig. 10, it will be released from the catch members 345, thus permitting the barrier member 295 to move the movable contact 293 out of engagement with the contacts 283 and 289 to the position shown in Fig. 11. The arc thus drawn in the arc chamber 279 is quickly extinguished in the manner previously described.

Resetting of the contacts to the closed position during the closing stroke of the switch is similar to that described in connection with Figs. 8 and 9 except that the movement of the interrupting unit in this instance towards the support bracket 271 causes the bayonet latch member 343 to be forced between the catch members 345, which are spring pressed and spread to permit the enlarged portion of the latch member to pass therethrough. The catch members thereafter spring back in place to relatch the contacts in the closed circuit position.

It will be noted that the circuit interrupting units described in Figs. 8 through 11 embody a contact structure for interrupting the circuit prior to the introduction of an air gap in the circuit, which contacts are completely enclosed and protected from exposure to climatic conditions. The metallic cap or closure member 285 also serves as a condenser for condensing the generated gas during the circuit opening operation, and prevents the existence of external arc or flame.

Although we have shown and described several specific embodiments of our invention, it is to be understood that the same were for the purpose of illustration and that changes and modifications may be made by those skilled in the art without departing from the spirit and scope of the appended claims.

We claim as our invention:

1. In a circuit interrupter, a pair of concentric tubes of insulating material defining an annular arc passage, separable contact means for drawing an arc adjacent one end of said arc passage, and a third tube of insulating material relatively movable between said pair of concentric tubes for causing said arc to be restricted in cross section and lengthened along a path substantially twice the length of the relative movement between said last-named tube and said pair of concentric tubes.

2. In a circuit interrupter, a pair of concentric tubes of insulating material defining an annular arc passage, separable contact means for drawing an arc adjacent one end of said arc passage, and a third tube of insulating material normally disposed outside said arc passage and biased for movement into said arc passage upon formation of an arc between said separable contacts, said third tube of insulating material being dimensioned to substantially fill said arc passage when moved therein for confining the arc to the restricted clearances between said tubes.

3. In a circuit interrupter, a pair of concentric tubes of insulating material defining an annular arc passage, a pair of stationary contacts disposed adjacent one end of said pair of concentric tubes, a bridging contact normally coacting with said pair of stationary contacts to complete the electric circuit therebetween, means for moving said bridging contact into said arc passage to establish an arc therein, and a tubular follower of insulating material movable into said arc passage for causing the arc to play in two series related branches one in each of the annular spaces between said follower and said concentric tubes.

4. In a circuit interrupter, a pair of concentric tubes of insulating material defining an annular arc passage, a pair of stationary contacts disposed adjacent one end of said pair of concentric tubes, a third tube of insulating material movable between said stationary contacts into said arc passage, a movable contact carried by said third tube normally bridging said stationary contacts when said third tube is outside said arc passage, and means for moving said third tube into said arc passage to cause said movable contact to draw an arc with each of said stationary contacts.

5. In a circuit interrupter, means of insulating material defining an annular arc passage open at one end and closed at the other end, separable contact means adjacent the open end of said arc passage, a tubular member of insulating material open at one end and closed at the other end, said tubular member being normally disposed with its open end adjacent to the open end of said arc passage and in alignment with said pas-

sage, means for actuating said separable contact means to establish an arc across the open end of said arc passage, and means for moving said tubular member into the arc passage to confine the arc between the walls of said tubular member and the walls of said arc passage.

6. In a circuit interrupter, means of insulating material defining an annular arc passage, a pair of spaced contacts disposed adjacent one end of said arc passage, a tubular member of insulating material movable between said spaced contacts into said arc passage, a movable contact member carried by said tubular member and normally adapted to bridge said pair of spaced contacts, and disconnecting separable contact means engaging and biasing one of said spaced contacts into engagement with said movable contact member and the other of said spaced contacts to provide a low resistance connection between said contacts and said contact member.

7. In a circuit interrupter, means of insulating material defining an annular arc passage, a pair of generally annular and concentrically disposed spaced contacts adjacent one end of said arc passage, a tubular member of insulating material movable between said spaced contacts into said arc passage, and a tubular contact carried by one end of said tubular member and normally adapted to interconnect said spaced contacts, each of said spaced contacts having an annular groove intermediate its ends for confining arcing between said spaced contacts and said tubular contact to a portion of the contact surface on one side of said groove.

8. In a circuit interrupting device, a pair of spaced terminals, bridging means normally electrically connecting said terminals and movable into and out of engagement with at least one of said terminals, said bridging means including means of insulating material defining an annular arc passage, separable contact means adjacent one end of said arc passage movable to open and closed circuit positions for interrupting and establishing a circuit between said terminals while said bridging means is in engagement with said terminals, a tubular member of insulating material movable into said arc passage upon separation of said contact means, and operating means operable in one continuous movement for first separating said contacts to establish an arc and to cause said tubular member to be moved into said arc passage to extinguish the arc and for thereafter moving said bridging means out of engagement with at least one of said terminals.

9. In a circuit interrupting device, a pair of spaced terminals, bridging means normally electrically connecting said terminals and movable into and out of engagement with at least one of said terminals, said bridging means including means of insulating material defining an annular arc passage, having a stationary contact adjacent one end thereof, a coacting contact movable into said arc passage for establishing an arc therein while said bridging means is in engagement with said terminals, a tubular follower of insulating material movable into said arc passage to assist arc extinction, and operating means operable in one continuous movement for first causing said movable contact and said follower to be moved into said arc passage and thereafter for moving said bridging means out of engagement with at least one of said terminals.

10. In a circuit interrupting device, a pair of spaced terminals, bridging means normally electrically connecting said terminals and movable into and out of engagement with at least one of said terminals, said bridging means including means of insulating material defining an annular arc passage, separable contact means adjacent one end of said arc passage movable to open and closed circuit positions for interrupting and establishing a circuit between said terminals while said bridging means is in engagement with said terminals, spring means, a tubular member of insulating material movable into said arc passage by said spring means to cause separation of said contact means, latch means normally holding said tubular member against the bias of said spring means, and operating means operable in one continuous movement for first releasing said latch means to cause said spring means to move said tubular member and contact means to the open circuit position and for thereafter moving said bridging means out of engagement with at least one of said terminals.

11. In a circuit interrupting device, a pair of spaced terminals, bridging means normally electrically connecting said terminals and movable into and out of engagement with at least one of said terminals, said bridging means including means of insulating material defining an annular arc passage, separable contact means adjacent one end of said arc passage movable to open and closed circuit positions for interrupting and establishing a circuit between said terminals while said bridging means is in engagement with said terminals, spring means biasing said contact means to the open circuit position, latch means normally holding said contact means in the closed position against the bias of said spring means, a tubular member of insulating material movable into said arc passage by said spring means upon separation of said contact means, and operating means operable in one continuous movement for first releasing said latch means to cause said spring means to move said contact means and said follower to the open circuit position and for thereafter moving said bridging means out of engagement with at least one of said terminals, and means operable in response to movement of said bridging means for moving said separable contact means and said follower to the closed circuit position.

12. In a circuit interrupting device, a pair of spaced terminals, bridging means normally electrically connecting said terminals and movable into and out of engagement with at least one of said terminals, said bridging means including separable contact means, spring means for actuating said contact means to the open circuit position, latch means restraining the action of said spring means, and operating means operable in one continuous movement for first releasing said latch means to cause said spring means to move said contact means to the open circuit position and for thereafter moving said bridging means out of engagement with at least one of said terminals.

13. In a circuit interrupting device, a pair of spaced terminals, bridging means normally electrically connecting said terminals and movable into and out of engagement with at least one of said terminals, said bridging means including separable contact means, spring means for actuating said contact means to the open circuit position, latch means restraining the action of said spring means, and operating means operable in one continuous movement for first releasing said latch means to cause said spring means to

move said contact means to the open circuit position and for thereafter moving said bridging means out of engagement with at least one of said terminals, and means operable in response to movement of said bridging means for moving said separable contact means to the closed circuit position.

14. In a circuit interrupting device, a pair of spaced terminals, bridging means normally electrically connecting said terminals and movable into and out of engagement with at least one of said terminals, said one terminal having limited movement with said bridging means during the initial movement of said bridging means towards the open circuit position, said bridging means including separable contact means, spring means biasing said contact means to the open circuit position, latch means holding said contact means in the closed position against the bias of said spring means, operating means for operating said bridging means out of engagement with at least said one terminal, and means actuated by said operating means during the limited movement of said one terminal with said bridging means for releasing said latch means to cause said spring means to move said contact means to the open circuit position.

15. In a circuit interrupting device, a pair of spaced terminals, bridging means normally electrically connecting said terminals and movable into and out of engagement with at least one of said terminals, said one terminal having limited movement with said bridging means during the initial movement of said bridging means towards the open circuit position, said bridging means including separable contact means, spring means biasing said contact means to the open circuit position, latch means holding said contact means in the closed position against the bias of said spring means, operating means for operating said bridging means out of engagement with at least said one terminal, and means actuated by said operating means during the limited movement of said one terminal with said bridging means for releasing said latch means to cause said spring means to move said contact means to the open circuit position, and means operable in response to movement of said bridging means following disengagement of the latter from said one terminal for relatching said contact means in the closed circuit position.

16. In a circuit interrupter, a pair of spaced terminals, a hollow bridging member at least partially of insulating material and having a conducting member on each end thereof adapted to engage said spaced terminals, said bridging member being movable into and out of engagement with at least one of said terminals, conducting means within said bridging member electrically connecting said conducting members, said conducting means including separable contact means, means biasing said contact means to the open circuit position, latch means for normally holding said contact means in the closed circuit position against the action of said biasing means, and operating means operable in one continuous movement for first tripping said latch means to cause separation of said contact means to draw an arc within said hollow bridging member and for thereafter moving said bridging member out of engagement with at least one of said terminals.

17. In a circuit interrupter, a pair of spaced terminals, a hollow bridging member at least partially of insulating material and having a conducting member on each end thereof adapted to engage said spaced terminals, said bridging member being movable into and out of engagement with at least one of said terminals, conducting means within said bridging member electrically connecting said conducting members, said conducting means including separable contact means, means biasing said contact means to the open circuit position, latch means for normally holding said contact means in the closed circuit position against the action of said biasing means, and operating means operable in one continuous movement for first tripping said latch means to cause separation of said contact means to draw an arc within said hollow bridging member and for thereafter moving said bridging member out of engagement with at least one of said terminals, and means operable in response to movement of said bridging member out of engagement with said one terminal for relatching said separable contact means in the closed circuit position.

18. In a circuit interrupter, a pair of spaced terminals, bridging means including a casing movably mounted on one of said terminals, a hollow blade member at least partially of insulating material extending from said casing, a conducting member carried by the free end of said blade member adapted to be moved into and out of engagement with the other terminal in accordance with movement of said casing, conducting means including separable contact means within said bridging means connecting said conducting member and said casing, a spring biased actuating member extending into said casing for moving said contact means to the open circuit position, latch means for said actuating member to hold said separable contact means in the closed circuit position, operating means for said casing operable to move said blade member out of engagement with said other terminal, and actuating means within said casing operable during the initial movement of said casing to trip said latch means to cause said actuating member to move said contact means to the open circuit position.

19. In a circuit interrupter, a pair of spaced terminals, bridging means including a casing movably mounted on one of said terminals, a hollow blade member at least partially of insulating material extending from said casing, a conducting member carried by the free end of said blade member adapted to be moved into and out of engagement with the other terminal in accordance with movement of said casing, conducting means including separable contact means within said bridging means connecting said conducting member and said casing, a spring biased actuating member extending into said casing for moving said contact means to the open circuit position, latch means for said actuating member to hold said separable contact means in the closed circuit position, operating means for said casing operable to move said blade member out of engagement with said other terminal, and actuating means within said casing operable during the initial movement of said casing to trip said latch means to cause said actuating member to move said contact means to the open circuit position, and means within said casing operative upon further movement of said casing for moving said actuating member to its latched position.

20. In a circuit interrupter, a terminal, a hollow blade member at least partially of insulat-

ing material mounted for swinging movement, a contact, an off-set support for pivotally mounting said contact on said terminal, a contact member on the free end of said blade member adapted to be moved into and out of engagement with said pivotally supported contact, said support being arranged to provide a limited amount of movement of said pivotally mounted contact with said blade member during the initial movement of said blade member to the open circuit position, separable contacts within said hollow blade member biased to the open circuit position but normally latched in the closed circuit position to complete the electric circuit to said terminal when said blade member is in the closed circuit position, operating means for swinging said blade member to the open circuit position, and means operative in response to the initial movement of said blade member to the open circuit position for separating said separable contacts to interrupt the circuit.

21. In a circuit interrupter, a pair of spaced terminals, a hollow blade member mounted for swinging movement to open and closed positions on one of said terminals, said blade member having a yielding contact portion adjacent to the free end thereof, a contact member movably mounted on the other terminal for receiving said yielding contact portion when said blade member is in the closed position, a movable contact within said hollow blade member adapted to coact with said yielding contact portion to establish a circuit between said terminals when said blade member is in the closed position, and support means for said contact member having limited relative movement with respect to said other terminal and said blade member operative to cause a high pressure engagement between said contact member, said yielding contact portion and said movable contact when said blade member is moved to the closed circuit position.

22. In a circuit interrupter, a pair of spaced terminals, a hollow blade member mounted for swinging movement to open and closed positions on one of said terminals, said blade member having a yielding wedge shaped contact portion adjacent the free end thereof, a contact yoke adapted to coact with said contact portion on said blade member, a support for movably mounting said contact yoke on the other terminal, a movable contact within said hollow blade member adapted to coact with said yielding contact portion to complete the circuit between said terminals when said blade member is in the closed circuit position, and operating means for swinging said blade member to open and closed positions, said support providing limited swinging movement of said contact yoke with said blade member and limited relative movement longitudinally of said blade member during the final closing movement of said blade member to cause said wedge shaped contact portion to engage said contact yoke with a wiping action and to establish a high pressure contact between said contact yoke, said wedge shaped contact portion and said movable contact within said blade member.

23. In a circuit interrupter, a pair of spaced terminals, an elongated completely closed casing member normally bridging said spaced terminals, said casing member being pivotally mounted on one of said terminals for swinging movement into and out of engagement with the other of said terminals, separable contacts within and carried by said casing, actuating means within said casing to actuate said contacts to the open circuit position to establish an arc, means wholly within said casing for extinguishing said arc, and operating means operable in one continuous movement for first releasing said actuating means to separate said contacts, and for thereafter moving said casing out of engagement with respect to said other of said terminals.

24. In a circuit interrupting device, a pair of spaced terminals, bridging means normally electrically connecting said terminals and movable into and out of engagement with at least one of said terminals, means latching said bridging means to said one terminal to normally hold said bridging means in the closed circuit position, separable contacts carried by said bridging means biased to open circuit position, means for latching said separable contacts in the closed circuit position, and operating means operable for first unlatching said separable contact latching means and then unlatching said bridging means from said one terminal to permit the bridging means to be moved out of engagement with said one terminal.

25. In a circuit interrupter, a pair of spaced terminals, a hollow bridging member pivotally mounted on one of said terminals for swinging movement into and out of engagement with the other of said terminals, an engageable latching lever pivotally mounted adjacent the free end of said bridging member for normally holding said bridging member in the closed circuit position, separable contacts within said bridging member biased to the open circuit position, means for latching said separable contacts in the closed circuit position, and means actuated by movement of said latching lever to release said separable contact latching means to cause said contacts to interrupt the circuit prior to movement of said bridging means out of engagement with said other terminal.

26. In a circuit interrupting device, a pair of spaced terminals, bridging means normally electrically connecting said terminals and movable into and out of engagement with at least one of said terminals, means latching said bridging means to said one terminal to normally hold said bridging means in the closed circuit position, separable contacts carried by said bridging means biased to open circuit position, means for latching said separable contacts in the closed circuit position, and operating means operable for first unlatching said separable contact latching means and then unlatching said bridging means from said one terminal to permit the bridging means to be moved out of engagement with said one terminal, and means operable in response to movement of said bridging means to the open position for latching said separable contacts in the closed circuit position.

27. In a circuit interrupter, a pair of spaced terminals, a hollow bridging member pivotally mounted on one of said terminals for swinging movement into and out of engagement with the other of said terminals, an engageable latching lever pivotally mounted adjacent the free end of said bridging member for normally holding said bridging member in the closed circuit position, separable contacts within said bridging member biased to the open circuit position, means for latching said separable contacts in the closed circuit position, and means actuated by movement of said latching lever to release said separable contact latching means to cause said contacts to interrupt the circuit prior to movement of said

bridging means out of engagement with said other terminal, and means activated by movement of said bridging member to the open circuit position relatching said separable contacts in the closed circuit position.

28. A switching device comprising a pair of spaced insulators, a terminal supported on each of said insulators, bridging means including fusible means pivotally mounted on one of said terminals for swinging movement into and out of engagement with said other terminal for making and breaking the electrical circuit between said terminals, a third terminal insulatingly supported in spaced relation with said pair of terminals, and circuit interrupting means including a pair of separable contacts disposed between said third terminal and one of said pair of terminals, means for separating said contacts while said circuit interrupting means is in engagement with its respective terminals, said one of said pair of terminals serving as a common support for said fusible means and said circuit interrupting means.

29. Circuit interrupting means comprising three spaced conducting terminals, a circuit interrupting device movably supported between two of said terminals, said circuit interrupting device being adapted to interrupt overload currents while in engagement with said two terminals and being movable out of engagement with at least one of said terminals to insert an air gap of appreciable length in the circuit, and a second circuit interrupting device connected in series with said first circuit interrupting device and supported between two of said terminals one of which is common to both interrupting devices, said second interrupting device having separable contacts adapted to interrupt load currents of lesser magnitude than the overload current interrupted by said first circuit interrupting device, and means for separating said contacts while said second circuit interrupting means is in engagement with its respective terminals.

30. The combination with a switch having a terminal member and blade means operable into and out of engagement with said terminal member of an arc extinguishing device having a casing supported for limited relative movement with respect to said terminal member, said casing having an external contact terminal engageable by said blade means at least during the initial opening movement thereof, separable contacts within said casing connected for establishing a circuit through said casing from said terminal member to said blade means, means for actuating said blade means to open circuit position, said separable contacts being movable with said casing for maintaining the circuit therethrough until said blade means has ben moved out of engagement with said terminal member, and means responsive to further movement of said casing by said blade means to cause said separable contacts to open and interrupt the circuit.

31. The combination with a switch having a terminal member and blade means operable into and out of engagement with said terminal member of an arc extinguishing device having a casing supported for limited relative movement with respect to said terminal member, an electrical circuit through said casing including separable contacts at least one of which is connected to said terminal member, means for releasably connecting said blade means with another of said separable contacts to establish a circuit in parallel with the gap formed between said terminal member and said blade means, said connecting means including means for moving said casing relative to said terminal member, and means responsive to predetermined movement of said casing following disengagement of said blade means from said terminal member to cause said contacts to separate and interrupt the circuit.

32. The combination with a switch having a terminal member and blade means operable into and out of engagement with said terminal member of an arc extinguishing device having a casing supported for limited relative movement with respect to said terminal member, an electrical circuit through said casing including separable contacts at least one of which is connected to said terminal member, means for releasably connecting said blade means with another of said separable contacts to establish a circuit in parallel with the gap formed between said terminal member and said blade means, said connecting means including means for moving said casing relative to said terminal member, means biasing said separable contacts to the open circuit position, latch means for normally holding said separable contacts in the closed position, and means responsive to a predetermined movement of said casing for tripping said latch means to cause said contacts to separate with a quick action.

33. The combination with a switch having a terminal member and blade means operable into and out of engagement with said terminal member of an arc extinguishing device having a casing, a circuit through said casing including separable contacts at least one of which is connected to said terminal member, means for releasably connecting said blade means with another of said separable contacts to establish a circuit in parallel with the gap formed between said terminal member and said blade means, means biasing said separable contacts to the open circuit position, means normally holding said contacts in the closed position, an operating member disposed for relative movement with respect to said casing for controlling said holding means, said connecting means including means operative to produce relative movement between said operating member and said casing at least following disengagement of said blade means from said terminal member to cause said holding means to release said separable contacts only following disengagement of said blade means from said terminal members.

34. In a circuit interrupter, arc extinguishing means including separable contacts normally held in the closed circuit position, means of insulating material movable to a position between said contacts, biasing means for actuating said contacts to the open circuit position and said insulating means to said position between said contacts, operating means for moving said separable contacts and insulating means with respect to said biasing means to increase the operating force of said biasing means, and means responsive to a predetermined movement of said separable contacts for releasing said separable contacts and insulating means for movement of said contacts to the open circuit position and of said insulating means to a position therebetween.

35. In a circuit interrupter, a support, a casing mounted thereon and having limited relative movement therewith, separable contacts in said casing, resilient means in said casing and connecting said casing and at least one of said contacts whereby relative movement of said casing

in one direction will stress said resilient means in a direction to move said contacts to the open circuit position, latch means in said casing for normally holding said separable contacts in the closed position, and means responsive to a predetermined relative movement of said casing for tripping said latch means to cause said biasing means to quickly open said contacts.

36. In a circuit interrupter, a support, a casing mounted thereon and having limited relative movement therewith, separable contacts within said casing arranged for movement therewith at least during a portion of the movement of said casing, latch means for holding said contacts in the closed circuit position, operating means for moving said casing with respect to said support, biasing means operative to cause separation of said contacts and disposed to oppose movement of said casing, and means responsive to predetermined movement of said casing for tripping said latch means to cause said contacts to open under the action of said biasing means.

37. In a circuit interrupter, a support, a casing mounted thereon and having limited relative movement therewith, separable contacts within said casing arranged for movement therewith at least during a portion of the movement of said casing, latch means for holding said contacts in the closed circuit position, operating means for moving said casing with respect to said support, at least one of said contacts having relative movement with respect to said casing and another of said contacts following release of said latch means, means responsive to predetermined movement of said casing for releasing said latch means, and biasing means operative to move said one contact with respect to another of said contacts following release of said latch means.

38. In a circuit interrupter, a pair of separable disconnecting contacts, arc extinguishing means having separable arc establishing contact means, biasing means for actuating said arc establishing contacts means to open circuit position, latch means for restraining the action of said biasing means, and a movable operating member operative upon continuous movement in one direction for initially releasing said latch means to cause the circuit to be opened at said arc establishing contact means and for subsequently causing said pair of disconnecting contacts to separate to insert an isolating break in the circuit.

39. In a circuit interrupter, a pair of separable disconnecting contacts, arc extinguishing means having separable arc establishing contact means, biasing means for actuating said arc establishing contact means to open circuit position, latch means for restraining the action of said biasing means, a movable operating member operative upon continuous movement thereof in one direction for initially releasing said latch means to cause the circuit to be opened at said arc establishing contact means and for subsequently causing said pair of disconnecting contacts to separate to insert an isolating break in the circuit, said operating member upon movement in the opposite direction causing said biasing means for actuating said arc establishing contact means to be relatched in the closed circuit position and movement of said pair of disconnecting contacts to the closed circuit position.

40. In a circuit interrupting device, a pair of spaced terminals, bridging means normally electrically connecting said terminals and movable into and out of engagement with at least one of said terminals, said bridging means including separable contact means, spring means biasing said contact means to the open circuit position, latch means holding said contact means in the closed position against the bias of said spring means, and operating means operable in one continuous movement for first releasing said latch means to cause said spring means to move said contact means to the open circuit position and for thereafter moving said bridging means out of engagement with at least one of said terminals.

41. In a circuit interrupting device, a pair of spaced terminals, bridging means normally electrically connecting said terminals and movable into and out of engagement with at least one of said terminals, said bridging means including separable contact means, spring means biasing said contact means to the open circuit position, latch means holding said contact means in the closed position against the bias of said spring means, and operating means operable in one continuous movement for first releasing said latch means to cause said spring means to move said contact means to the open circuit position and for thereafter moving said bridging means out of engagement with at least one of said terminals, and means operable in response to movement of said bridging means for moving said separable contact means to the closed circuit position.

42. In a circuit interrupting device, a pair of spaced terminals, bridging means normally electrically connecting said terminals and movable into and out of engagement with at least one of said terminals, said one terminal having limited relative movement with respect to said bridging means without breaking contact during the initial opening movement of said bridging means, said bridging means including separable contact means, spring means operating said contact means to open circuit position, latch means for restraining the action of said spring means, operating means for moving said bridging means out of engagement with at least said one terminal, and means actuated by said operating means during the limited relative movement between said one terminal and said bridging means for releasing said latch means to cause said spring means to move said contact means to the open circuit position.

43. In a circuit interrupter, a pair of concentric tubes of insulating material defining an annular arc passage, separable contact means for drawing an arc adjacent one end of said arc passage, and a third tube of insulating material relatively movable between said pair of concentric tubes for causing said arc to be restricted in cross-section and lengthened along a path substantially twice the length of the relative movement between said last-named tube and said pair of concentric tubes, and operating means extending through at least one of said pair of concentric tubes.

44. In a circuit interrupting device, a pair of spaced terminals, bridging means normally electrically connecting said terminals and movable into and out of engagement with at least one of said terminals, said one terminal having limited movement with said bridging means during the initial movement of said bridging means towards the open circuit position, said bridging means including separable contact means, operating means for operating said bridging means out of engagement with at least said one terminal, and

means actuated by said operating means during the limited movement of said one terminal with said bridging means for moving said contact means to their open circuit position.

45. In a circuit interrupting device, a pair of spaced terminals, bridging means normally electrically connecting said terminals and movable into and out of engagement with at least one of said terminals, said one terminal having limited movement with said bridging means during the initial movement of said bridging means towards the open circuit position, said bridging means including separable contact means, operating means for operating said bridging means out of engagement with at least said one terminal, means actuated by said operating means during the limited movement of said one terminal with said bridging means for moving said contact means to their open circuit position, and means operable in response to movement of said bridging means following disengagement of the latter from said one terminal for reclosing said contact means.

46. Circuit interrupting means including three spaced terminals, insulating means supporting said terminals, a pair of circuit interrupting devices supported on said terminals, each of said devices connecting a pair of said terminals with one terminal common to both devices, one of said devices being movably mounted on one of its associated terminals for movement into and out of engagement with the other of its terminals, and the other of said devices being connected to said common terminal between its insulating support and the other of said devices.

47. Circuit interrupting means including three insulated spaced terminals, a pair of circuit interrupting devices supported on said terminals, each of said devices connecting a pair of said terminals with one terminal common to both devices, one of said devices comprising an expulsion type interrupting device and having the end thereof which is open upon the occurrence of an interrupting operation mounted on said common terminal outwardly of the other of said devices so as to be directed angularly away from said other device, to direct the products of expulsion angularly away from said other device.

48. In a circuit interrupter, a pair of concentric tubes of insulating material defining an annular arc passage, separable contact means for drawing an arc adjacent one end of said arc passage, and a third tube of insulating material relatively movable between said pair of concentric tubes for causing said arc to be restricted in cross-section and lengthened along a path substantially twice the length of the relative movement between said last-named tube and said pair of concentric tubes, and means extending through the inner one of said concentric tubes and connected to said contact means.

49. In a circuit interrupter, a blade member mounted for movement into and out of engagement with respect to a cooperating contact member, said contact member being mounted for limited movement with said blade member but angularly thereto adjacent the closed position of said members, one of said members adapted to receive the other, and at least one of said members having a tapered engaging portion adapted to be moved into and out of high pressure engagement with the other of said members during said movement of said members together.

50. In a circuit interrupter, a blade member mounted for movement into and out of engagement with respect to a cooperating contact member, said contact member being mounted for limited movement with said blade member but angularly thereto adjacent the closed position of said members, said blade member having a wedge-shaped contact portion for engaging a yoke portion on said contact member so that said portions are movable into and out of high pressure engagement with the other of said members during said movement of said members together.

51. In a circuit interrupter, arc-extinguishing means including separable contacts normally held in a closed circuit position, means of insulating material movable to a position between said contacts, biasing means for actuating said contacts to the open circuit position and said insulating means to said position between said contacts, operating means for stressing said biasing means, and means responsive to a predetermined movement of said operating means for releasing said separable contacts and insulating means for movement of said contacts to the open circuit position and of said insulating means to a position therebetween.

52. The combination with a switch having a terminal member and blade means operable into and out of engagement with said terminal member of an arc extinguishing device having a casing, a circuit through said casing including separable contacts at least one of which is connected to said terminal member, means for releasably connecting said blade means with another of said separable contacts to establish a circuit in parallel with the gap formed between said terminal member and said blade means, means for biasing said separable contacts to the open circuit position, and means responsive to movement of said blade means for controlling said biasing means to separate said separable contacts to quickly open the circuit after said blade means has moved out of engagement with said terminal member, and prior to release of said blade means from the contact with which it is associated.

53. The combination with a switch having a terminal member and blade means operable into and out of engagement with said terminal member of an arc extinguishing device having a casing, a circuit through said casing including separable contacts at least one of which is connected to said terminal member, means for releasably connecting said blade means with another of said separable contacts to establish a circuit in parallel with the gap formed between said terminal member and said blade means, means for biasing said separable contacts to the open circuit position, and means responsive to movement of said blade means for controlling said biasing means to separate said separable contacts to quickly open the circuit after said blade means has moved out of engagement with said terminal member, and prior to release of said blade means from the contact with which it is associated, and said blade means upon movement thereof in a reverse direction toward said terminal member adapted to first releasably engage said other contact of said arc extinguishing device, and said controlling means being responsive to said reverse movement of said blade means to thereafter cause engagement of said contacts.

54. In a circuit interrupter, a pair of spaced terminals, a bridging member pivotally mounted on one of said terminals for swinging movement into and out of engagement with the other of said terminals, an engageable latching lever piv-

otally mounted adjacent the free end of said bridging member for normally holding said bridging member in the closed circuit position, said lever being pivotally movable to latch and unlatch said bridging member in the closed circuit position, stop means limiting pivotal movement of said lever whereby a continuous pull exerted on said lever in one direction will first release said bridging member and thereafter cause pivotal movement thereof to an open circuit position, separable contacts within said bridging member biased to the open circuit position, means for latching said separable contacts in the closed circuit position, and means actuated by pivotal movement of said latching lever to release said separable contact latching means to cause said contacts to interrupt the circuit prior to movement of said bridging means out of engagement with said other terminal.

55. The combination with a switch having a terminal member and blade means operable into and out of engagement with said terminal member of an arc extinguishing device having a casing mounted on said terminal member, a circuit through said casing including separable contacts at least one of which is connected to said terminal member, means for releasably connecting said blade means with another of said separable contacts to establish a circuit in parallel with the gap formed between said terminal member and said blade means, means for biasing said separable contacts to the open circuit position, and means responsive to movement of said blade means for controlling said biasing means to separate said separable contacts to quickly open the circuit after said blade means has moved out of engagement with said terminal member, and prior to release of said blade means from the contact with which it is associated.

56. The combination with a switch having a terminal member and blade means operable into and out of engagement with said terminal member of an arc extinguishing device having a casing, a circuit through said casing including separable contacts at least one of which is connected to said terminal member, means for releasably connecting said blade means with another of said separable contacts to establish a circuit in parallel with the gap formed between said terminal member and said blade means, means for biasing said separable contacts to the open circuit position, means responsive to movement of said blade means for controlling said biasing means to separate said separable contacts to quickly open the circuit after said blade means has moved out of engagement with said terminal member prior to release of said blade means from the contact with which it is associated, and means operable continuously in one direction for moving said blade means to an open circuit position at which it is spaced from said terminal member and said other of said separable contacts, whereby in a circuit interrupting operation said blade means is first separated from said terminal member but remains in engagement with said other of said separable contacts, thereafter said contacts are quickly separated to interrupt the circuit, and then said connection of said blade means and contact is released, and finally said blade means moves to the aforesaid open circuit position.

57. The combination with a switch having a terminal member and blade means operable into and out of engagement with said terminal member of an arc extinguishing device having a casing, a circuit through said casing including separable contacts at least one of which is connected to said terminal member, means for releasably connecting said blade means with another of said separable contacts to establish a circuit in parallel with the gap formed between said terminal member and said blade means, means for biasing said separable contacts to the open circuit position, means responsive to movement of said blade means for controlling said biasing means to separate said separable contacts to quickly open the circuit after said blade means has moved out of engagement with said terminal member prior to release of said blade means from the contact with which it is associated, means operable continuously in one direction for moving said blade means to an open circuit position at which it is spaced from said terminal member and said other of said separable contacts, whereby in a circuit interrupting operation said blade means is first separated from said terminal member but remains in engagement with said other of said separable contacts, thereafter said contacts are quickly separated to interrupt the circuit, and then said connection of said blade means and contact is released, and finally said blade means moves to the aforesaid open circuit position, and said operating means upon reverse movement thereof adapted to move said blade means into engagement with said terminal member, whereby in a circuit closing operation said blade means is first moved into engagement with said other of said separable contacts, and thereafter said controlling means being responsive to further movement of said blade means toward said terminal member to close said separable contacts.

LEON R. LUDWIG.
JAMES H. FRAKES.
MARTHA M. SCHOFIELD,
Administratrix of the Estate of Stanley T. Schofield, Deceased.

DISCLAIMER

2,272,717.—*Leon R. Ludwig*, Wilkinsburg, *James H. Frakes*, Edgewood, and *Stanley T. Schofield*, deceased, late of Wilkinsburg, Pa., by *Martha M. Schofield*, administratrix. Wilkinsburg, Pa. CIRCUIT INTERRUPTING DEVICE. Patent dated February 10, 1942. Disclaimer filed February 12, 1945, by the assignee, *Westinghouse Electric & Manufacturing Company*.

Hereby enters this disclaimer to claims 17, 24, and 26 of said specification.

[*Official Gazette March 13, 1945.*]

DISCLAIMER

2,272,717.—*Leon R. Ludwig*, Wilkinsburg, *James H. Frakes*, Edgewood, and *Stanley T. Schofield*, deceased, late of Wilkinsburg, Pa., by *Martha M. Schofield*, administratrix. Wilkinsburg, Pa. CIRCUIT INTERRUPTING DEVICE. Patent dated February 10, 1942. Disclaimer filed February 12, 1945, by the assignee, *Westinghouse Electric & Manufacturing Company*.

Hereby enters this disclaimer to claims 17, 24, and 26 of said specification.

[*Official Gazette March 13, 1945.*]