May 28, 1929. H. SCHLAICH 1,714,988

BOURDON TUBE

Filed July 15, 1924

Fig. 1.



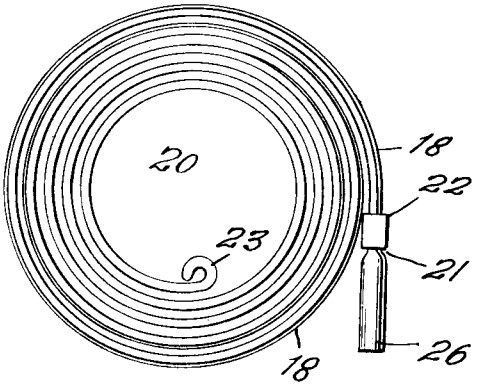

Fig. 2.

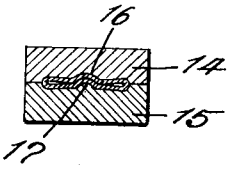

Fig. 5.

Fig. 3.

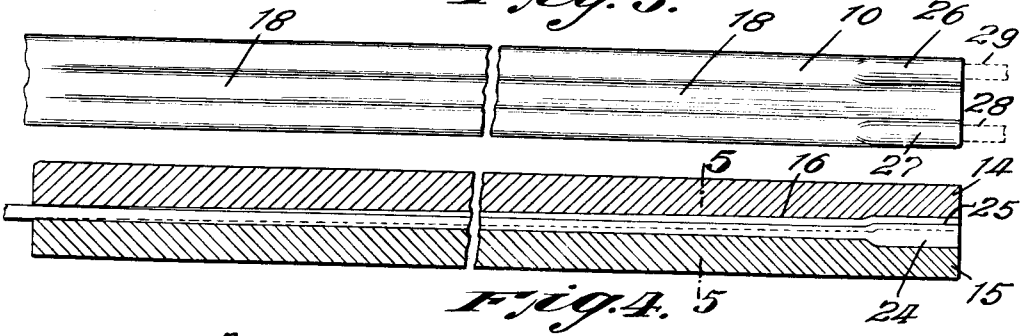

Fig. 4.

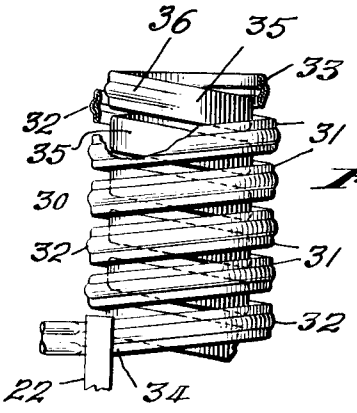

Fig. 6.

INVENTOR
Herman Schlaich
BY Munn & Holt
ATTORNEYS

Patented May 28, 1929. 1,714,988

UNITED STATES PATENT OFFICE.

HERMAN SCHLAICH, OF LONG ISLAND CITY, NEW YORK.

BOURDON TUBE.

Application filed July 15, 1924. Serial No. 726,231.

This present invention relates to pressure responsive instruments, and more particularly to a Bourdon tube.

Certain instruments, such, for example, as distance type thermometers utilize a Bourdon tube to actuate an indicator in response to the variations of pressure produced by the expansion and contraction of an expansive liquid in a remotely located bulb.

In order to obtain a wide, open, uniform scale and accurate and dependable readings, it has been found necessary to eliminate as many parts which might contribute errors—as by lost motion—as possible. This has resulted in the use of a longer pressure responsive element which has been wound into such forms as a double helix having inner and outer coils or a spiral coil. These forms of pressure responsive element have parts at different diameters. Inasmuch as the flexibility of the Bourdon tube is a function of the radius of curvature, it is not uniform throughout the length of the coil. I have found that this lack of uniformity is quite appreciable and that it results in compelling the outer coils to assume more than their share of the distortion due to pressure changes. The inner coils, on account of the stiffness inherent in the smaller diameter of coil, operate at a much reduced efficiency.

The present invention contemplates the provision of a pressure responsive element wherein the coil is provided with stiffening means in the parts of larger radius so that the inner parts may be rendered more efficient for the intended purpose. The invention also contemplates to provide the stiffening member in any desired part of the coil.

Other objects of the invention include the provision of a method for making tubes having the characteristics above outlined.

In the accompanying drawings two forms of the invention are illustrated in detail together with the method of forming up the element, it being understood that the drawings are for purposes of illustrating the invention, which is not necessarily limited thereto. In these drawings:

Fig. 1 is a cross section of a flat piece of tubing suitable for making into a Bourdon tube;

Fig. 2 shows a spiral coil made up in accordance with the present invention;

Fig. 3 shows the end of the tubing shaped to form the outer part of the coil;

Fig. 4 is a longitudinal section through suitable dies showing the formation of the part shown in Fig. 3;

Fig. 5 is a cross section on the line 5—5 of Fig. 4; and

Fig. 6 illustrates a double helical coil to which the present invention has been applied.

In making up pressure responsive elements in accordance with the present invention one may utilize a flattened tube of the proper material and size for the particular instrument in which the Bourdon tube is to be used. A cross-section of such a flattened tube is illustrated at 10 in Fig. 1, where it will be noted that the flattened tube is opened slightly at 11 and 12.

It has heretofore been the practice to wind such flattened tubing directly into the coil, but the present invention contemplates an intermediate step which is illustrated in Figs. 4 and 5. One end of the flattened tubing is placed between a pair of cooperative dies 14 and 15 one of which is provided with a longitudinal depression 16 which is opposite a longitudinal rib 17 on the other die. When pressure is applied to the dies, a longitudinal rib is produced in the end portion of the strip of flattened tubing. Such a ridge is shown at 18. Where the strip of tubing is to be used in making a spiral coil (such as shown in Fig. 2) I prefer to gradually taper the depression 16 and rib 17 in the dies, as more clearly shown in Fig. 4, so as to produce a tapering longitudinal rib or ridge along the tubing.

The proper length of tubing is then wound into a coil 20 of the predetermined diameter. Such a coil is illustrated in Fig. 2. Here the outer end 21 of the coil is mounted in a fixed support 22 while the inner end 23 is adapted for connection with an indicating hand, not shown. The tapering ridge or rib 18 extends from the support around the outer convolutions of the coil, thereby rendering these convolutions somewhat more rigid than the inner ones. When the ribs is made tapering the rigidity of the convolutions varies inversely with the distance from the outer or supported end of the complete coil.

I have found that coils made up as above described provide a very open and uniform scale, and that all parts of the coil may be made to function in the intended manner by varying the stiffness by means of the rib or ridge which is formed into the tubing before it is wound into the coil.

If desired, one may provide the dies 14 and 15 with opposed depressions 24 and 25 and, in conjunction with other dies (not shown), form enlarged openings 26 and 27 which are adapted to receive the pressure tubing 28 and the sealing tube 29.

Fig. 6 shows a double helical coil form of pressure responsive element 30. In making up such a coil according to the present invention, one provides the length of strip which is to go into the outer convolutions 31 with a long ridge or rib 32 which extends from the end convolution 33 down to the other end 34 of the coil where it is suitably supported in the instrument. The end convolution is spirally wound and has a decreasing diameter to reach to the inner convolutions 35. This convolution is preferably provided with a rib 36 of varying height so that there will be a gradual variation in the rigidity of this convolution as its radius of curvature changes. In this form of coil one may, however, omit the tapering feature in the end coil 33 and rely upon the difference in rigidity in the inner and outer coils which would be produced by uniform ridge or rib 32.

It is obvious that the invention may be practiced with reference to many forms and constructions, and I wish it to be understood that the particular forms shown are but a few of the many forms. Various modifications and changes being possible, I do not limit myself in any way with respect thereto.

What I claim is:

1. A Bourdon tube having a plurality of coils of different diameter and means for rendering the outer coils stiffer than the inner coils.

2. A coiled Bourdon tube having a plurality of convolutions, the outer convolutions having a stiffening rib arranged to render the outer convolutions stiffer than the inner convolutions.

3. A coiled Bourdon tube having a plurality of convolutions, the outer convolutions having a stiffening rib, the height of the rib varying inversely as the distance from the outer end of the coil.

4. A Bourdon coil having a reinforcement of gradually diminishing rigidity toward the center of the coil.

5. In a pressure responsive element, a fixed support, a Bourdon tube whose outer end is mounted in the support and whose inner end is free, said tube having a plurality of coils of different diameter and means for rendering the outer coils stiffer than the inner coils.

6. In a pressure responsive element, a fixed support, a Bourdon tube whose outer end is mounted in the support and whose inner end is free, said tube having a plurality of coils of different diameter and a rib of decreasing height to render the outer coils progressively stiffer than the inner coils.

7. A Bourdon tube having the outer coils thereof progressively stiffened by a stiffening rib of non-uniform cross section.

8. A coiled Bourdon tube of small cross section throughout its length, having coils of varying diameter, the stiffness of the coils varying substantially as their diameter.

9. A sensitive element for instruments, comprising an elongated elastic member, of small substantially uniform cross section area throughout its length wound into coil shape and shaped to have a gradually diminishing degree of rigidity from the outer end toward the inner end.

10. A Bourdon coil of substantially uniform cross section for use in pressure sensitive instruments, designed to flex in response to pressure, said coil having different degrees of rigidity at different portions of its length, the rigidity of the various portions being proportioned to the flexing forces set up simultaneously at such portions by a change of pressure.

In testimony whereof I have affixed my signature to this specification.

H. SCHLAICH.