(12) INTERNATIONAL APPLICATION PUBLISHED UNDER THE PATENT COOPERATION TREATY (PCT)

(19) World Intellectual Property Organization
International Bureau

(43) International Publication Date
10 August 2017 (10.08.2017)

WIPO | PCT

(10) International Publication Number
WO 2017/134635 A1

(51) International Patent Classification:
G01N 24/08 (2006.01) *G01R 33/383* (2006.01)
G01R 33/30 (2006.01) *G01R 33/48* (2006.01)

(21) International Application Number:
PCT/IB2017/050626

(22) International Filing Date:
5 February 2017 (05.02.2017)

(25) Filing Language: English

(26) Publication Language: English

(30) Priority Data:
62/291,058 4 February 2016 (04.02.2016) US
62/330,942 3 May 2016 (03.05.2016) US

(71) Applicant: **CLEAR-CUT MEDICAL LTD.** [IL/IL]; 10 Plaut Street, 7670609 Rehovot (IL).

(72) Inventor: **SHAPIRO, Moshe**; 7 Zamenhof Street, 4659207 Herzliya (IL).

(74) Agent: **KLEIN, David**; 18 Menuha VeNahala Street, 7620921 Rehovot (IL).

(81) Designated States *(unless otherwise indicated, for every kind of national protection available)*: AE, AG, AL, AM, AO, AT, AU, AZ, BA, BB, BG, BH, BN, BR, BW, BY, BZ, CA, CH, CL, CN, CO, CR, CU, CZ, DE, DJ, DK, DM, DO, DZ, EC, EE, EG, ES, FI, GB, GD, GE, GH, GM, GT, HN, HR, HU, ID, IL, IN, IR, IS, JP, KE, KG, KH, KN, KP, KR, KW, KZ, LA, LC, LK, LR, LS, LU, LY, MA, MD, ME, MG, MK, MN, MW, MX, MY, MZ, NA, NG, NI, NO, NZ, OM, PA, PE, PG, PH, PL, PT, QA, RO, RS, RU, RW, SA, SC, SD, SE, SG, SK, SL, SM, ST, SV, SY, TH, TJ, TM, TN, TR, TT, TZ, UA, UG, US, UZ, VC, VN, ZA, ZM, ZW.

(84) Designated States *(unless otherwise indicated, for every kind of regional protection available)*: ARIPO (BW, GH, GM, KE, LR, LS, MW, MZ, NA, RW, SD, SL, ST, SZ, TZ, UG, ZM, ZW), Eurasian (AM, AZ, BY, KG, KZ, RU, TJ, TM), European (AL, AT, BE, BG, CH, CY, CZ, DE, DK, EE, ES, FI, FR, GB, GR, HR, HU, IE, IS, IT, LT, LU, LV, MC, MK, MT, NL, NO, PL, PT, RO, RS, SE, SI, SK, SM, TR), OAPI (BF, BJ, CF, CG, CI, CM, GA, GN, GQ, GW, KM, ML, MR, NE, SN, TD, TG).

Published:

— *with international search report (Art. 21(3))*

— *before the expiration of the time limit for amending the claims and to be republished in the event of receipt of amendments (Rule 48.2(h))*

(54) Title: MRI IMAGING SYSTEM USING PERMANENT MAGNET ARRAY

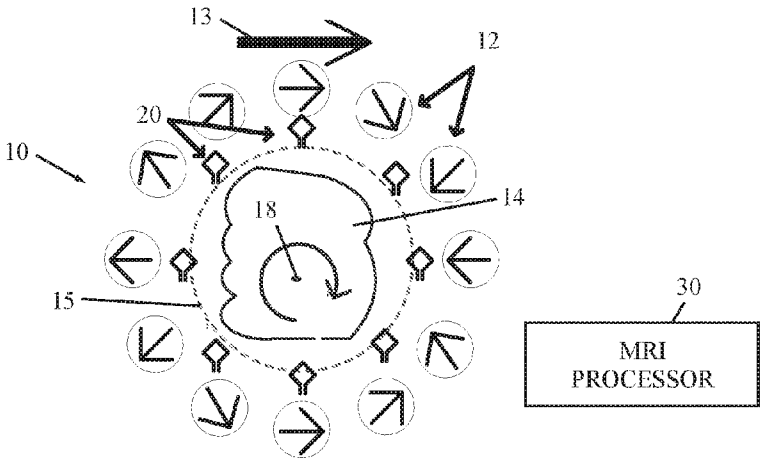

FIG. 1

(57) Abstract: A tissue imaging system (10) includes a stationary array of magnets (12) arranged to generate an inhomogeneous main magnetic field (B0), a tissue holder (16) adjacent the array of magnets (12) and operative to move tissue (14) placed therein about and/or along a coordinate axis, one or more RF receive coils (20) adjacent the tissue holder (16) and the magnets (12), and an MRI processor in communication with the magnets (12), the RF receive coils (20) and the tissue holder (16). An image of the tissue (14) is created by using spatial encoding of magnetic resonance signals generated by the magnets (12) and RF receive coils (20) for different spatial orientations of the tissue (14) moved by the tissue holder (16) with respect to the magnets. Spatial inhomogeneities in the main magnetic field spatially modulate a phase of each of the magnetic resonance signals.

WO 2017/134635 A1

MRI IMAGING SYSTEM USING PERMANENT MAGNET ARRAY

FIELD OF THE INVENTION

The present invention relates generally to devices and methods for imaging tissues, such as an excised tumor or other tissue, and particularly to a magnetic resonance imaging (MRI) system that uses permanent magnets for the main magnetic field to image tissue.

BACKGROUND OF THE INVENTION

Breast cancer is usually treated with surgery and then possibly with chemotherapy or radiation, or both. There are two surgical options: mastectomy (removal of entire breast) and lumpectomy (removal of lump only). Lumpectomy is currently the most common treatment, suitable for at least 60% of women with breast cancer.

During lumpectomy, it is important to take out all cancerous tissue, in order to minimize the risk of cancer recurrence. However, surgeons avoid excision of unnecessarily large-tissue volumes, which negatively impacts cosmetic results. In order to verify that all cancerous tissue has been removed, the lump is pathologically examined in order to check if the lump's outer edges contain cancerous tissue or not (positive or negative margins). If positive margins are retrospectively detected on the lump during pathology, in many cases a repeated operation is necessary in order to take out additional tissue.

There is a significant unmet clinical need to provide breast cancer surgeons with a system that can indicate the margin status of excised breast lumps (including any additional "augmentation" pieces of breast tissue) during the surgical procedure, so that if needed, additional tissue can be excised, until all margins are indicated as negative.

PCT Patent Application PCT/US2011/023101 describes systems and methods for confirming the existence of a clean margin of healthy tissue around an excised tumor. The system includes an imaging scanner controlled by an imaging control unit and an ex-vivo sample holder for holding a sample of an excised tissue. The sample holder is sized so that excised lump edges of the excised tissue are forced against a surface of the sample holder such that the edges change shape to have a predetermined geometry. The imaging scanner is positioned relative to the sample holder such that the imaging scanner acquires images (or measurements) not of all the tissue but rather of the edges that have the predetermined geometry and which are in a sensitive region extending into a peripheral margin of the tissue.

US Patent Application 20140111202 describes a portable magnetic resonance imaging (MRI) system that spatially encodes images using spatial inhomogeneities in the static polarizing magnetic field rather than using gradient fields. The inhomogeneous static field is used to polarize, readout, and encode an image of the object. To provide spatial

encoding, the magnet is rotated around the object to generate a number of differently encoded measurements.

SUMMARY OF THE INVENTION

The present invention also seeks to provide an MRI system that uses permanent magnets for volumetric mapping and imaging of a tissue, as described in more detail further below. The invention is described as a 2D imaging system but may be used as part of a 3D volume imaging system.

The invention is not restricted to imaging clean tissue margins at the tissue periphery; rather the invention can also provide volumetric mapping of the tissue sample with a fast speed of image acquisition. This is in contrast with the system of PCT/US2011/023101 which is slower and which can provide images only of the tissue periphery.

There is thus provided in accordance with an embodiment of the present invention a tissue imaging system including a stationary array of magnets arranged to generate an inhomogeneous main magnetic field (B_0), a tissue holder adjacent the array of magnets and operative to move tissue placed therein about and/or along a coordinate axis, one or more RF receive coils adjacent the tissue holder and the magnets, and an MRI processor in communication with the RF receive coils and the tissue holder, and operative to construct an image of the tissue by using spatial encoding of magnetic resonance signals generated by the magnets and RF receive coils for different spatial orientations of the tissue moved by the tissue holder with respect to the magnets, wherein spatial inhomogeneities in the main magnetic field spatially modulate a phase of each of the magnetic resonance signals.

The magnets may be arranged in a Halbach array or may be iron cored. The RF receive coils may be stationary or movable within the main magnetic field.

In accordance with an embodiment of the present invention the magnets may include magnetic yokes.

In accordance with another embodiment of the present invention the magnets include magnetic yokes connected to permanent magnets of a Halbach array.

In accordance with another embodiment of the present invention the magnets include permanent magnets and one or more shims.

In accordance with an embodiment of the present invention a method for magnetic resonance imaging including: a) arranging an object within a stationary array of magnets; b) generating a radio frequency (RF) field to the object to excite spins therein; c) receiving magnetic resonance signals responsive to the generated RF field from the object; d) moving the object to a different orientation with respect to said magnets; e) repeating steps b)-d) a

plurality of times to receive magnetic resonance signals from the object at a plurality of different orientations; and f) reconstructing an image of the object from the received magnetic resonance signals.

BRIEF DESCRIPTION OF DRAWINGS

The present invention will be understood and appreciated more fully from the following detailed description, taken in conjunction with the drawings in which:

Fig. 1 is a simplified schematic illustration of a tissue imaging system, constructed and operative in accordance with a non-limiting embodiment of the present invention;

Fig. 2 is a simplified pictorial illustration of the global coordinate system for imaging, in accordance with an embodiment of the present invention;

Fig. 3 is a simplified schematic illustration of a tissue imaging system, constructed and operative in accordance with another non-limiting embodiment of the present invention, in which a pair of magnetic yokes and permanent magnets are employed (e.g., “iron cored” topology);

Fig. 4 is a simplified schematic illustration of a tissue imaging system, constructed and operative in accordance with another non-limiting embodiment of the present invention, in which magnetic yokes are connected to permanent magnets of a Halbach array;

Fig. 5 is a simplified schematic illustration of a tissue imaging system, constructed and operative in accordance with another non-limiting embodiment of the present invention, with the addition of one or more shimming magnets (e.g., permanent magnet) or other magnetic materials (e.g., iron sheet); and

Fig. 6 is a simplified illustration of a method for imaging using PATLOC and resolving ambiguous spatial encoding magnetic fields by relative rotation or displacement, in accordance with an embodiment of the invention, Fig. 6 being a graphical illustration of PATLOC acquisition, showing CPMG spin-echo sequences and images constructed therefrom.

DETAILED DESCRIPTION OF EMBODIMENTS

Reference is now made to Fig. 1, which illustrates a tissue imaging system 10, constructed and operative in accordance with a non-limiting embodiment of the present invention.

System 10 includes a stationary array of magnets 12 arranged to create a main magnetic field, which is the static magnetic field (B_0). The direction of the main magnetic field is indicated by arrow 13. Although the invention can be carried out with any kind of magnet, such as electromagnetic elements or a combination of permanent and

superconducting magnets, in a preferred embodiment, magnets 12 are permanent magnets, such as but not limited to, iron or rare earth (e.g., neodymium-iron-boron or samarium-cobalt), or a combination thereof, with or without cores of magnetic material. In one embodiment, magnets 12 are permanent magnets, whose magnetic field may be shaped with materials such as Mu metals (nickel–iron soft magnetic alloys) cored with other magnetic material (e.g., a soft magnetic material such as iron), which results in an inhomogeneous polarizing field (main magnetic field).

In the embodiment illustrated in Fig. 1, the magnets 12 are permanent magnets arranged in a Halbach array (e.g., cylindrical array). Fig. 3 illustrates another embodiment, in which a pair of magnetic yokes 12A, which may be made of high permeability materials such as Mu metals (nickel–iron soft magnetic alloys) cored with other magnetic material (e.g., a soft magnetic material such as iron), are placed on either side of the tissue 14 and permanent magnets 12B are placed between the yokes 12A. Fig. 4 illustrates yet another embodiment, in which magnetic yokes 12A are connected to permanent magnets 12 of the Halbach array. The term “yoke” as used herein encompasses any arrangement of magnets with air gaps (such as H-shapes, C-shapes and other shapes, with or without the addition of magnetic material cores.

Reference is now made to Fig. 2, which illustrates the global coordinate system for imaging. The 2D imaging plane is the x-y plane, and each tissue slice is taken along the z axis. A tissue sample 14 is disposed in a tissue holder 16, which is rotatable about a rotation axis 18, such as the symmetry axis of holder 16, and/or translatable along any coordinate axis.

Referring again to Fig. 1, one or more RF receive coils 20 may be mounted adjacent to the tissue 14 and the magnets 12. In the illustrated embodiment, there are more magnets 12 than RF receive coils 20, but in other embodiments there may be the same number of RF receive coils as magnets, or alternatively, there may be more RF receive coils than magnets. In one embodiment, each RF receive coil 20 may be mounted between the tissue 14 and one of the magnets 12. In another embodiment, one or more of the RF receive coils 20 may be mounted between magnets 12.

The RF receive coils 20 collect a time-varying RF (B_1) magnetic field perpendicular to the B_0 field, for example, pointing towards the center of tissue sample 14. The RF receive coils 20 may be large enough relative to the sample height so that the intensity of the B_1 field is relatively constant throughout the height of the sample. The RF receive coils 20 sense nuclear spins (which may be excited by transmit coils, not shown) in the tissue sample for magnetic resonance as is well known to the skilled artisan. The system images a

field of view (FOV), as indicated by arrow 15 in Fig. 1. A magnetic resonance imaging processor 30 is in communication with RF receive coils 20 and tissue holder 16.

In contrast to the system of PCT/US2011/023101, the present invention does not need to employ gradient coils to create the MR images. Rather, in this embodiment, the spatial encoding is based on the main magnetic field's inhomogeneity, which is used to polarize, readout, and encode an image of the tissue 14. If the main magnetic field is non-linear, then in order to resolve the non-linear spatial encoding, the imaged tissue 14 is rotated and/or translated within the static main magnetic field and signals are collected from the RF receive coils 20. The RF receive coils 20 may either be stationary or may be rotated or displaced within the static magnetic field. This is in contrast to the system of US Patent Application 20140111202, in which the magnets are rotated and the imaged object is stationary and cannot be rotated.

The inhomogeneous magnetic field of magnets 12 serves to polarize the tissue 14 to be imaged and to readout magnetic resonance signals. Tissue 14 is moved (rotated and/or translated) after each image acquisition, such that tissue 14 has a different spatial orientation for each image acquisition. For example, the first acquisition might have the B_0 field oriented transversely from left-to-right through the tissue 14. The tissue 14 is then subsequently moved to different spatial orientations, each with a unique magnetic field orientation. The spatial inhomogeneities in the magnetic field generated by magnets 12 spatially modulate the magnetic resonance signal phase, such that in conjunction with the rotation and/or translation provides spatial encoding of the signals that can be used to construct an image of the tissue 14. The Halbach array configuration of the magnets naturally forms a nonlinear magnetic field whose variation in Larmor frequency (which may vary about 50-100 KHz over the FOV) can be used for spatial encoding, as is known in the art.

The spatial localization of magnetic resonance signals is improved by using the RF receive coils 20. Information from the RF receive coils 20 may be used to reconstruct an image in a process analogous to parallel imaging in conventional MRI. During image construction, the spatially varying coil sensitivities are incorporated directly into the encoding matrix. Further image encoding can also be achieved by limiting the bandwidth of the RF excitation pulse used. In this case, the excitation is limited to a constrained "onion-shell" of spatial regions, which may be useful for imaging clean tissue margins.

Reference is now made to Fig. 5, which illustrates the embodiment of Fig. 1, but with the addition of one or more shims 22, which may be an iron or Mu metal sheet or a permanent magnet. In this MRI system, the main magnetic field is generated by the set of

permanent magnets 12 shimmed by shim(s) 22 so that a linear field is attained in a way that uses the static magnetic field's permanent, uniform gradient for encoding the spatial location of nuclear spins. This uniform gradient can enable using uniform, gradient-dependent MRI contrast parameters, such as ADC (Apparent Diffusion Coefficient), to be imaged. The spatial encoding may be based on the main magnetic field's permanent gradient as a readout gradient while the relative rotation between the permanent gradient and the imaged tissue is carried out for a polar phase encoding gradient. To resolve the polar spatial encoding, MR signals are collected from the one or more RF receive coils 20 at different rotation angles of the tissue 14 in a "projection reconstruction" scheme.

The magnetic field may be homogenous in the z direction so that there are only permanent gradients in the 2D imaging plane alone. This is obtained by using the permanent magnets 12 and shim(s) 22 which are generally constant in the z direction.

The magnetic field in the x-y plane may have a single vector component in the FOV (or at least with other negligible components) so that imaging may be possible without resorting to complicated processing techniques.

The goal of shimming is to provide a field which is as linear as possible, i.e., the local gradient is almost constant in magnitude and direction. Realistically it is understood that a certain amount of residual inhomogeneity is present.

The gradient value takes into consideration the T2*-ADC relation so that the resulting value enables a reasonable T2* fit for each pixel (a zero gradient disables diffusion expression). An accurate local "effective gradient" may be measured so that the T2* map attained for each pixel may be transformed to a uniform ADC value which depends only on the tissue microstructure.

Slice selection may be based upon on the transmit coil's z axis sensitivity. Alternatively, slice selection may be based upon a z direction gradient or other slice encoding schemes.

Reference is now made to Fig. 6, which illustrates a method for imaging using PATLOC and resolving ambiguous spatial encoding magnetic fields by relative rotation or displacement, in accordance with an embodiment of the invention.

PATLOC (Parallel Imaging Technique Using Localized Gradients) is a method for attaining MR images in a heterogeneous encoding field, in which there is no single, uniform gradient in the entire imaging domain but rather a "local" gradient for each spatial point. The heterogeneous encoding field may be created either by heterogeneous polarizing fields or by nonlinear gradient coil responses. The heterogeneous encoding field may have a non-unique spatial encoding, so this ambiguous encoding must be resolved. In PATLOC, the

spatial encoding magnetic fields (SEMs) are inherently ambiguous because they produce a non-bijective correlation between k-space and the image domain.

In order to resolve the ambiguity, in the prior art, a multiple receiver RF coil array is typically used for data acquisition. In general, the number of receiver elements in the RF coil array is equal to or greater than the degree of ambiguity present in the SEM.

In one embodiment of the present invention, a method of resolving the ambiguous spatial encoding includes recording the received signals with a plurality of receiver RF coils and rotating or displacing the imaged object with respect to the encoding field. Again, in contrast to the system of US Patent Application 20140111202, in the present invention, the encoding field and the object are rotated or displaced relative to each other (the object is also moved), and the MR image contrast mechanism is gradient affected (e.g., diffusion weighted MRI).

In this embodiment, the encoding magnetic field employs a plurality of magnets (either permanent or other), possibly in conjunction with gradient coils to create an inhomogeneous magnetic field (encoding magnetic field) with a specific relationship between the field and its gradient. (This may be done as described above in Figs. 1-5, in which the inhomogeneous magnetic field of magnets 12 serves to polarize the tissue 14 to be imaged and to readout magnetic resonance signals.) The relationship between the field and its gradient is characterized in a way that all spatial locations with a certain field magnitude share a similar gradient level (optimally they should be equal but a certain gradient variation is natural and the greater the variation the greater the error in correction).

Spatial encoding may be based on the main magnetic field's inhomogeneity or by using heterogeneous gradient fields (together comprising the SEM). Thus, an inhomogeneous field is used to polarize, readout, and encode an image of the object.

To resolve the non-linear spatial encoding, the imaged object may be either rotated or displaced within the encoding magnetic field and signals collected from a plurality of RF receiver coils (again as described above for Figs. 1-5). The received signals from each rotation\displacement step may be corrected as described below (Local Gradient Correction Method). The receive coils may either be stationary or may be rotated or displaced within the encoding magnetic field.

Local Gradient Correction Method - For a certain specimen voxel, experiencing a different local gradient at each rotation step, the gradient's effect on the MR experiment may be normalized by applying a different correction to each frequency component (corresponding to each encoding field's magnitude) according to a predefined gradient calculation (by pure calculation, measurement, calibration, etc.) corresponding to the field's

magnitude. This is possible considering the special relationship between the field and its gradient as described above. For each frequency component the correction may be performed according to the way the gradient's value affects the image contrast (see the Apparent Diffusion Coefficient Example below) and can be applied in any case the gradient's value can be characterized in the image contrast (such as by contrast weighting by an analytical formula, iterative correction, etc.). Data collected from different rotations/displacements of the specimen may be normalized and combined with a gradient-based contrast to reconstruct an image from different acquisitions which took place while the same specimen voxel experienced different local gradients.

Apparent Diffusion Coefficient (ADC) Example

Recalling the time decay formula of the diffusion term in the Bloch equation (in MRI, a Bloch equation is a member of a set of macroscopic equations that are used to calculate the nuclear magnetization $M=(M_x, M_y, M_z)$ as a function of time when relaxation times T1 and T2 are present), the analytical relation between the magnetization dephasing time constant (T2*), the apparent diffusion coefficient and the gradient is given by:

$$T^*_2 = \left[\frac{1}{T_2} + \frac{1}{3}\cdot\gamma^2 G^2 \tau^2 D\right]^{-1}$$

where G is the local gradient (which in the general case may be frequency dependent since it may correspond to a certain encoding field magnitude), T2 is the spin-spin relaxation time constant, γ the gyromagnetic ratio, τ the echo time and D is the ADC. In order to attain an ADC weighted T2* contrast the echo time is chosen so that T2 is negligible in the formulation of T2*. In this example T2* is attained by fitting the echoes from a CPMG (Carr-Purcell-Meiboom-Gill) sequence doing this by evaluating each pixel's time decay individually (T2* and ADC is calculated for each pixel individually). For an acquisition performed in a heterogeneous encoding field, a CPMG sequence MR experiment is performed at each step of the rotation. Each echo's spectrum is normalized (by a predefined frequency dependent correction function such as an inverse of the above equation considering the relation between the gradient and frequency). The PATLOC scheme is then utilized to reconstruct an independent image for each echo.

Fig. 6 is a graphical illustration of PATLOC acquisition, showing CPMG spin-echo sequences and images constructed therefrom,

Afterwards a 'T2* like' calculation (of the gradient normalized T2*) may be performed for each pixel (taken from multiple images) finally forming a normalized T2* (or ADC weighted) map.

CLAIMS

What is claimed is:

1. A tissue imaging system (10) comprising:

a stationary array of magnets (12) arranged to generate an inhomogeneous main magnetic field (B_0);

a tissue holder (16) adjacent said array of magnets (12) and operative to move tissue (14) placed therein about and/or along a coordinate axis;

one or more RF receive coils (20) adjacent said tissue holder (16) and said magnets (12); and

an MRI processor (30) in communication with said RF receive coils (20) and said tissue holder (16), and operative to construct an image of the tissue (14) by using spatial encoding of magnetic resonance signals generated by said magnets (12) and RF receive coils (20) for different spatial orientations of said tissue (14) moved by said tissue holder (16) with respect to said magnets (12), wherein spatial inhomogeneities in the main magnetic field spatially modulate a phase of each of the magnetic resonance signals.

2. The tissue imaging system (10) according to claim 1, wherein said magnets (12) are arranged in a Halbach array.

3. The tissue imaging system (10) according to claim 1, wherein said RF receive coils (20) are stationary.

4. The tissue imaging system (10) according to claim 1, wherein said RF receive coils (20) are movable within said main magnetic field.

5. The tissue imaging system (10) according to claim 1, wherein said magnets comprise magnetic yokes (12A).

6. The tissue imaging system (10) according to claim 1, wherein said magnets comprise magnetic yokes (12A) connected to permanent magnets (12B) of a Halbach array.

7. The tissue imaging system (10) according to claim 1, wherein said magnets comprise permanent magnets (12) and one or more shims (22).

8. A method for magnetic resonance imaging comprising:

a) arranging an object within a stationary array of magnets (12);

b) generating a radio frequency (RF) field to the object to excite spins therein;

c) receiving magnetic resonance signals responsive to the generated RF field from the object;

d) moving the object to a different orientation with respect to said magnets;

e) repeating steps b)-d) a plurality of times to receive magnetic resonance signals from the object at a plurality of different orientations; and

f) reconstructing an image of the object from the received magnetic resonance signals.

9. A method for magnetic resonance imaging comprising:

a) arranging an object within an inhomogeneous magnetic field (SEM);

b) generating a radio frequency (RF) field to the object to excite spins therein;

c) receiving magnetic resonance signals responsive to the generated RF field from the object;

d) causing relative movement between said object and the SEMs;

e) repeating steps b)-d) a plurality of times to receive magnetic resonance signals from the object at a plurality of different orientations; and

f) reconstructing an image of the object from the received magnetic resonance signals while performing a local gradient correction method comprising, wherein for each voxel, experiencing a different local gradient at each movement of the object, normalizing an effect of the gradient on the magnetic resonance image contrast by applying a different correction to each frequency component, corresponding to a magnitude of each SEM, according to a predefined gradient calculation corresponding to the SEM's magnitude.

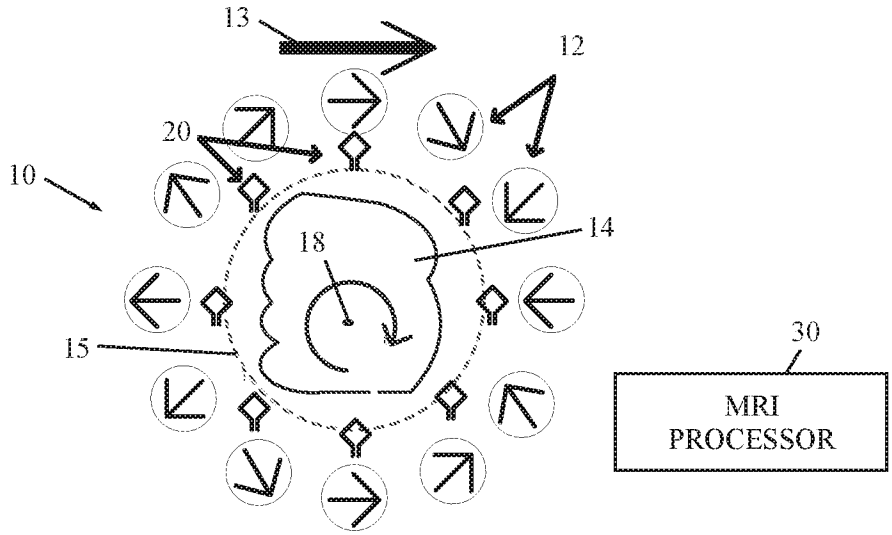
13
12
20
10
14
18
15
30
MRI
PROCESSOR

FIG. 1

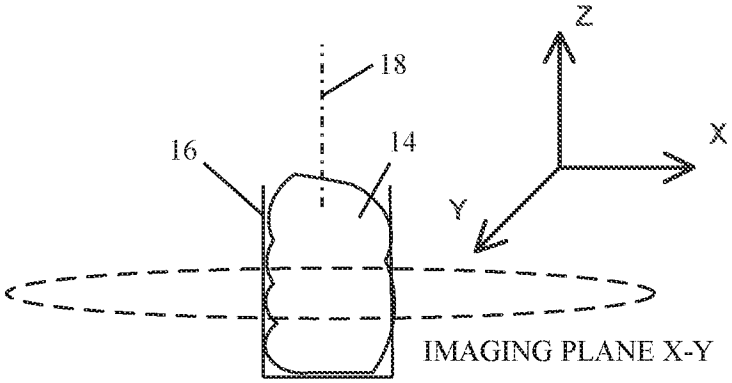
Z
18
X
16
14
Y
IMAGING PLANE X-Y

FIG. 2

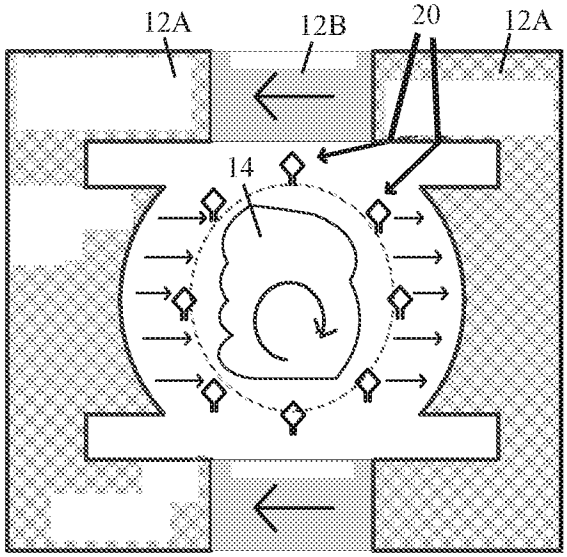

FIG. 3

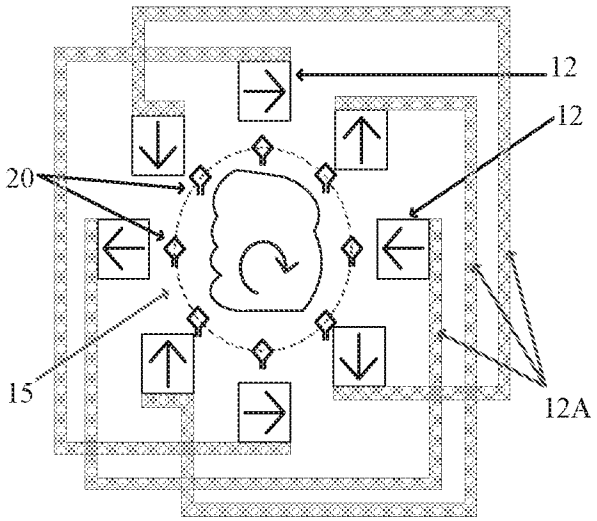

FIG. 4

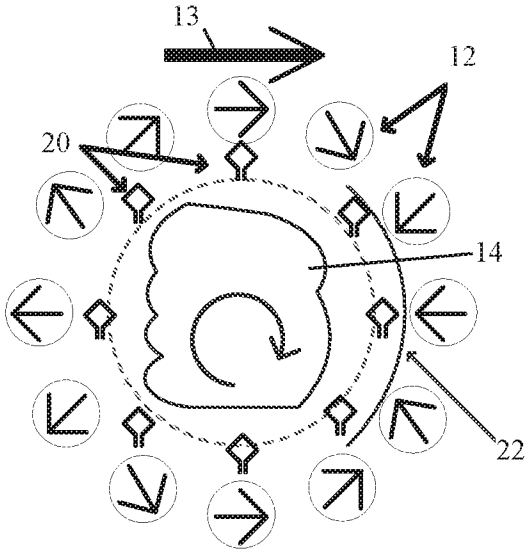

FIG. 5

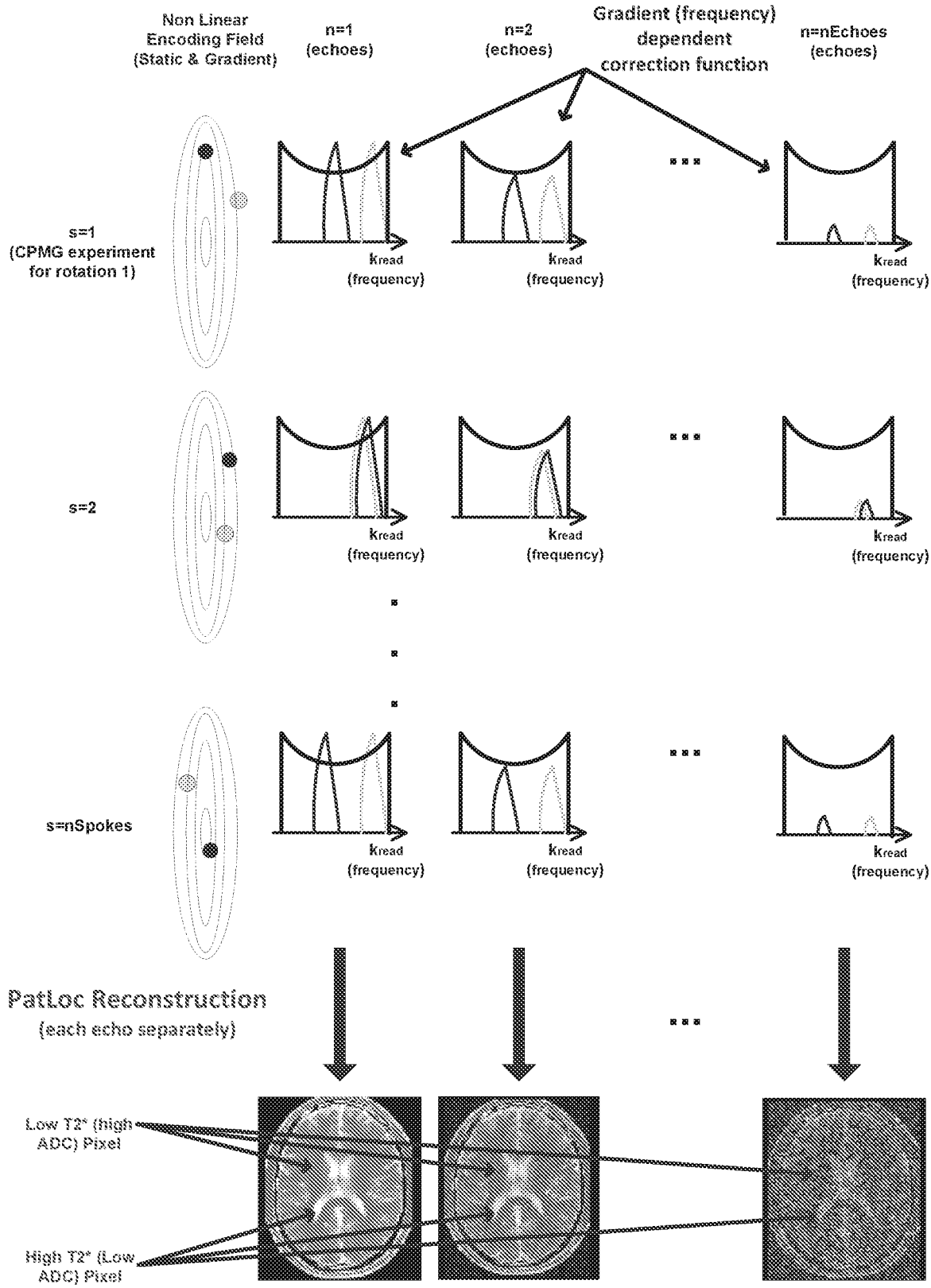
Non Linear
Encoding Field
(Static & Gradient)
n=1
(echoes)
n=2
(echoes)
Gradient (frequency)
dependent
correction function
n=nEchoes
(echoes)
s=1
(CPMG experiment
for rotation 1)
kread
(frequency)
s=2
s=nSpokes
PatLoc Reconstruction
(each echo separately)
Low T2* (high
ADC) Pixel
High T2* (Low
ADC) Pixel

FIG. 6

INTERNATIONAL SEARCH REPORT

International application No
PCT/IB2017/050626

A. CLASSIFICATION OF SUBJECT MATTER

INV. G01N24/08 G01R33/30
ADD. G01R33/383 G01R33/48

According to International Patent Classification (IPC) or to both national classification and IPC

B. FIELDS SEARCHED

Minimum documentation searched (classification system followed by classification symbols)

G01N G01R

Documentation searched other than minimum documentation to the extent that such documents are included in the fields searched

Electronic data base consulted during the international search (name of data base and, where practicable, search terms used)

EPO-Internal, INSPEC, BIOSIS, COMPENDEX, EMBASE, WPI Data

C. DOCUMENTS CONSIDERED TO BE RELEVANT

Category*	Citation of document, with indication, where appropriate, of the relevant passages	Relevant to claim No.
X	WANG P S ET AL: "Binder distribution in Si3N4 ceramic green bodies studied by stray-field NMR imaging", JOURNAL OF MATERIALS SCIENCE UK, vol. 28, no. 18, 15 September 1993 (1993-09-15), pages 4940-4943, XP055378163, ISSN: 0022-2461	1,3-5,7
A	chapter 3	2,6,8

-/--

[X] Further documents are listed in the continuation of Box C.

[X] See patent family annex.

* Special categories of cited documents :

"A" document defining the general state of the art which is not considered to be of particular relevance

"E" earlier application or patent but published on or after the international filing date

"L" document which may throw doubts on priority claim(s) or which is cited to establish the publication date of another citation or other special reason (as specified)

"O" document referring to an oral disclosure, use, exhibition or other means

"P" document published prior to the international filing date but later than the priority date claimed

"T" later document published after the international filing date or priority date and not in conflict with the application but cited to understand the principle or theory underlying the invention

"X" document of particular relevance; the claimed invention cannot be considered novel or cannot be considered to involve an inventive step when the document is taken alone

"Y" document of particular relevance; the claimed invention cannot be considered to involve an inventive step when the document is combined with one or more other such documents, such combination being obvious to a person skilled in the art

"&" document member of the same patent family

Date of the actual completion of the international search	Date of mailing of the international search report
7 June 2017	14/06/2017

Name and mailing address of the ISA/	Authorized officer
European Patent Office, P.B. 5818 Patentlaan 2 NL - 2280 HV Rijswijk Tel. (+31-70) 340-2040, Fax: (+31-70) 340-3016	Skalla, Jörg

4

C(Continuation). DOCUMENTS CONSIDERED TO BE RELEVANT

Category*	Citation of document, with indication, where appropriate, of the relevant passages	Relevant to claim No.
X	CLARISSA ZIMMERMAN COOLEY ET AL: "Two-dimensional imaging in a lightweight portable MRI scanner without gradient coils", MAGNETIC RESONANCE IN MEDICINE., vol. 73, no. 2, 25 March 2014 (2014-03-25) , pages 872-883, XP055251174, US ISSN: 0740-3194, DOI: 10.1002/mrm.25147 the whole document	9

X	HORNAK J.P. ET AL.: "Surface MRI Using a Rastered Backprojection", PROCEEDINGS OF THE INTERNATIONAL SOCIETY FOR MAGNETIC RESONANCE IN MEDICINE, 14TH SCIENTIFIC MEETING, 14 June 2006 (2006-06-14), page 1354, XP040596871, Seattle, USA the whole document	1,7

X	WO 2013/142459 A2 (CLEAR CUT MEDICAL LTD [IL]; KLEIN DAVID [IL]) 26 September 2013 (2013-09-26)	8
A	figure 6	1,2,6

X	WO 2008/065389 A1 (PLANT BIOSCIENCE LTD [GB]; HILLS BRIAN PHILIP [GB]; WRIGHT KEVIN MICHA) 5 June 2008 (2008-06-05) page 8, line 6 - page 9, line 16; claims 1-3,6,7	1,3,7-9

4

INTERNATIONAL SEARCH REPORT

Information on patent family members

International application No
PCT/IB2017/050626

Patent document cited in search report	Publication date	Patent family member(s)	Publication date
WO 2013142459 A2	26-09-2013	CN 104303067 A	21-01-2015
		EP 2828677 A2	28-01-2015
		US 2015091564 A1	02-04-2015
		WO 2013142459 A2	26-09-2013
WO 2008065389 A1	05-06-2008	GB 2445759 A	23-07-2008
		WO 2008065389 A1	05-06-2008