(12) INTERNATIONAL APPLICATION PUBLISHED UNDER THE PATENT COOPERATION TREATY (PCT)

(19) World Intellectual Property Organization
International Bureau

(43) International Publication Date
16 August 2007 (16.08.2007)

PCT

(10) International Publication Number
WO 2007/091124 A2

(51) International Patent Classification: Not classified

(21) International Application Number:
PCT/IB2006/004148

(22) International Filing Date:
21 December 2006 (21.12.2006)

(25) Filing Language: English

(26) Publication Language: English

(30) Priority Data:
0526501.2 28 December 2005 (28.12.2005) GB

(71) Applicant *(for all designated States except US)*: **BAUSCH & LOMB INCORPORATED** [US/US]; One Bausch & Lomb Place, Rochester, NY 14604-2701 (US).

(72) Inventors; and

(75) Inventors/Applicants *(for US only)*: **TOBIN, Patrick, J.** [IE/IE]; 7 Sylvan Drive, Grantstown Park, Waterford (IE). **WALSH, Brian, W.** [IE/IE]; 10 Stoneybridge, Piltown, Co. Kilkenny (IE).

(74) Agent: **BOWMAN, Paul, Alan**; Lloyd Wise, Commonwealth House, 1-19 New Oxford Street, London WC1A 1LW (GB).

(81) Designated States *(unless otherwise indicated, for every kind of national protection available)*: AE, AG, AL, AM, AT, AU, AZ, BA, BB, BG, BR, BW, BY, BZ, CA, CH, CN, CO, CR, CU, CZ, DE, DK, DM, DZ, EC, EE, EG, ES, FI, GB, GD, GE, GH, GM, GT, HN, HR, HU, ID, IL, IN, IS, JP, KE, KG, KM, KN, KP, KR, KZ, LA, LC, LK, LR, LS, LT, LU, LV, LY, MA, MD, MG, MK, MN, MW, MX, MY, MZ, NA, NG, NI, NO, NZ, OM, PG, PH, PL, PT, RO, RS, RU, SC, SD, SE, SG, SK, SL, SM, SV, SY, TJ, TM, TN, TR, TT, TZ, UA, UG, US, UZ, VC, VN, ZA, ZM, ZW.

(84) Designated States *(unless otherwise indicated, for every kind of regional protection available)*: ARIPO (BW, GH, GM, KE, LS, MW, MZ, NA, SD, SL, SZ, TZ, UG, ZM, ZW), Eurasian (AM, AZ, BY, KG, KZ, MD, RU, TJ, TM), European (AT, BE, BG, CH, CY, CZ, DE, DK, EE, ES, FI, FR, GB, GR, HU, IE, IS, IT, LT, LU, LV, MC, NL, PL, PT, RO, SE, SI, SK, TR), OAPI (BF, BJ, CF, CG, CI, CM, GA, GN, GQ, GW, ML, MR, NE, SN, TD, TG).

**Published:**
— *without international search report and to be republished upon receipt of that report*

*For two-letter codes and other abbreviations, refer to the "Guidance Notes on Codes and Abbreviations" appearing at the beginning of each regular issue of the PCT Gazette.*

(54) **Title:** METHOD AND APPARATUS FOR DETECTING ORIENTATION OF A CONTACT LENS IN A BLISTER

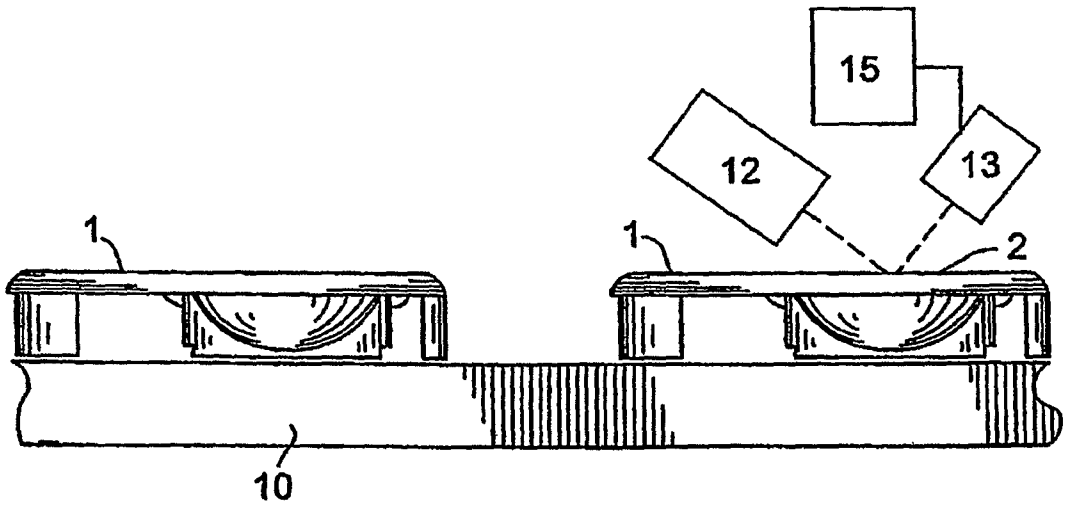


(57) **Abstract:** A method for detecting the orientation of a contact lens in a blister package comprising the steps of placing a contact lens having a convex side and a concave side into an open blister, aligning the blister with a light source and a digital camera, detecting a reflected and/or refracted image from the blister and contact lens with the digital camera and determining whether a correctly oriented lens is present from a characteristic of the reflected and/or refracted image with an analysis means.

WO 2007/091124 A2

# METHOD AND APPARATUS FOR DETECTING ORIENTATION OF A CONTACT LENS IN A BLISTER

This invention relates to a method and apparatus for confirming the orientation of a contact lens, particularly for a hydrogel lens, such as a soft hydrogel lens, especially for confirming the orientation of a lens in its package prior to completing the packaging operation.

A conventional manner of packaging contact lenses is in so-called "blister packages". Such packages include a recess designed to hold an individual lens, usually in a saline solution in the case of hydrogel lenses. The packages are then enclosed and sealed with a lidstock, the lidstock conventionally being a metallic laminate such as a laminate including an aluminum layer that can withstand post-packaging heat sterilization conditions. Frequently, multiple blister packages of contact lenses are then enclosed in a secondary carton which conventionally has the form of a paperboard box. The order of the process is typically that first a dry lens is placed into the dry blister, then a measured amount of saline solution or other hydrating solution is added to the blister, followed by sealing the lidstock in place over the blister.

There are two possible orientations for the lens in the blister, concave side up or concave side down. It has been found that where the lens is oriented in the blister with the concave side down, subsequent addition of the hydrating solution may lead to the lens floating due to an air bubble trapped under the lens, and this can result in inadequate hydration of the lens in the required time scale.

Each package with the lens in an incorrect orientation can lead to wasted capacity, material or labour or lost customer goodwill.

The present invention provides a method that can confirm whether a contact lens has been placed in its package in the orientation intended.

The invention provides a method for detecting the orientation of a contact lens in a blister package comprising the steps of placing a contact lens into an open blister, aligning the blister with a light source and a digital camera, detecting a reflected and/or refracted image from the blister and contact lens with the digital camera and determining whether a correctly oriented lens is present from a characteristic of the reflected and/or refracted image with an analysis means.

The invention is based on the observation that the image of a lens presented with the concave surface uppermost shows the shape of the reflected light 180° oriented with respect to the image received of the lens presented with the convex surface uppermost. For example with the concave surface uppermost the light reflection may be perceived as "u" shaped whereas with the convex surface uppermost the light reflection may be perceived as "n" shaped. This characteristic difference may be used as the basis for the detection of the orientation of the lens.

Generally, for ensuring adequate hydration, the desired correct orientation of a lens having a convex and a concave side, is when the lens has its convex side towards the blister.

By a blister package, is meant a package which comprises a recess or well. The recess or well may be of any suitable shape for holding a contact lens with its

concave or its convex side facing towards the base of the recess or well. The recess or well must also be suitable for holding the hydrating solution. It is preferably a regular shape such as a dish shape. Alternatively, the recess may be a well with a substantially flat base.

Typically, the package will be oriented such that the plane of the perimeter of the lens lens in the blister is substantially horizontal.

The act of placing the contact lens into the blister also includes the act of attempting to place the contact lens into the blister, where this is unsuccessful. In addition to detecting the orientation of the lens, the method may further be used to detect the absence of a lens. The methods used for placing or attempting to place the contact lens into the blister may be such that the orientation or exact placement may not be completely reliable. Typically the placement involves the use of a vacuum operated pick-and-place mechanism.

Suitably the detection of orientation is carried out after placing the lens into the blister, and before adding hydrating solution to the blister. However, the method may also be used after the hydrating solution has been added to the blister. Where the lidstock is transparent, the method may also be used after the lidstock has been sealed in place to detect the orientation of the lens through the lidstock. Where the lidstock is not transparent, as is often the case, the method may still be used on the sealed package provided the blister is adequately transparent, by providing the light source and detection means on the same side as the blister and detecting the orientation of the lens through the blister.

Typically, the method may include the further steps of adding a hydrating solution to the blister and sealing the blister with a lidstock. The method may provide that these steps are only carried out if a correctly oriented contact lens is detected in the package. Alternatively, the further steps may be carried out, but the package, or a register linked to the package, marked for rejection at a later stage.

The contact lens is a lens adapted to be fitted to the surface of the eye, and so is concave on the surface adapted to fit the eye and convex on the other surface. The orientation of the lens is suitably detected by the different reflective behaviour of the convex and concave surfaces of the lens.

The light source may be symmetrical or asymmetrical in appearance. In other words, when reflected in a plane mirror, the shape of the reflection of the light source may or may not be superimposable on the shape of the light source itself. If the light source is symmetrical, such as a spherical or point light source, then suitably the light source, the blister and the detection means are arranged such they are not in the same plane normal to the plane of the lens circumference, so that the reflected and/or refracted images for concave and convex orientations of the contact lens will differ in appearance such that the orientation of the lens can be determined from the image detected by the detection means and analyzed by the analysis means.

The light source may be any suitable light source whose light can be detected by the detection means. Typically, visible light will be used such as from an incandescent bulb, but infra-red or ultra violet light, or a particular wavelength of light may be employed in order to avoid interference from ambient lighting. The light source may be interrupted periodically at a certain frequency (such as by controlling the power supply or by intermittent masking with a rotating mask) and the analysis means

adapted to have enhanced sensitivity to light at that certain frequency such that steady ambient lighting is inhibited from interfering with the method. Such a method is known in the art as frequency or phase sensitive detection.

The detection means should be capable of detecting the image of the blister and lens (if present) at a sufficient resolution to permit the analysis means to detect the presence of a correctly oriented lens, with the concave side upwards. The detection means is a digital camera and preferably provided with an objective lens to focus the image of the blister onto the photosensitive detector array of the camera.

The analysis means is suitably a computer provided with image analysis software, programmed to discriminate from an image of the blister whether a correctly oriented lens is present in the blister, and also preferably programmed to carry out further instructions should it not detect a correctly oriented lens in the blister.

The light source and the digital camera may be on the same upper side of the package, or the same lower side (when the blister is adequately transparent as explained above), or maybe on opposite sides (upper and lower) of the package where detection is by transmission and refraction rather than by reflection of light.

When the method does not detect the presence of correctly oriented lens in a package, i.e. where the lens is in the wrong orientation, or where the lens is absent, then a corrective action is triggered such as sounding an alarm, marking the package, or a register of data liked to the package to indicate the error or discarding the package such that no further processing of the package is carried out.

The combination of light source, digital camera and analysis means may also be referred to as an image analysis means. A second aspect of the invention provides the use of an image analysis means for determining whether a correctly oriented hydrogel lens is present in a blister package

A third aspect of the invention is a production line assembly for the packaging of contact lenses in blister packs, wherein the production line assembly comprises an image analysis means, said means suitably comprising a light source, a digital camera and an analysis means, for determining whether a correctly oriented contact lens is present in a blister package. Preferably, the production line assembly is for hydrogel contact lenses and the lenses are sealed in the blister pack along with a hydrating solution.

Suitable image analysis means for the second and third aspects of the invention are as detailed for the first aspect of the invention.

Other modifications and variations of the present invention will be evident to the skilled practitioner. As one example, several light sources and corresponding detectors may be aligned in series, so that several packages, each package aligned with a light source and a detection means, can be examined simultaneously.

The invention will be further described by way of example only with reference to the drawings in which:

FIG.1 is a perspective view of a contact lens blister package;

FIG. 2 is a side perspective view of the blister package and an apparatus according

to an embodiment of the invention, and

FIG. 3 is an image of an array of blister packages containing contact lenses.

FIG. 1 illustrates a blister package for contact lenses. As seen in FIG. 1, blister package 1 includes recess 2 for holding an individual contact lens 3. Recess of blister 2 terminates at surface 4, and typically a metallic lidstock is sealed to surface 4 so as to sealingly encase blister 2 and enclose package 1. It is conventional for such packages to contain saline solution hermetically sealed in blister 2 along with the lens.

FIG. 2 illustrates schematically an apparatus for detecting the orientation of a contact lens in package 1. The apparatus includes stepped conveyor 10 for transporting packages 1. Positioned along the conveyor are at least one light source 12 and a corresponding detector 13. Digital camera 13 is connected to and analyzer 15 programmed in a manner that if the detector does not render a predetermined reading (i.e., does not detect the presence of a correctly oriented contact lens in the package), corrective action can be taken. For example, an alarm can be sounded to alert an operator, or the package which does not contain a correctly oriented lens can be removed automatically from the queue.

FIG. 3 is an image of an array of blister packages taken by a digital camera employed as detector 13 as described above. The image shows an array of four blister packages (A, B, C and D) viewed from above each comprising an ovoid well containing a contact lens. The contact lenses in blister packages A and C are in a different orientation to the contact lenses in blisters B and D. It will be observed that the images of the contact lenses in blister packages A and C are quite different from

those of the contact lenses in blister packages B and D. While all the images are in the form of a substantially closed "C" shape the opening in the "C" shape of the images of the 8 contact lenses in packages A and B is in the 7 o'clock position whereas the opening in the "C" shape of the images of the contact lenses in the blister packages B and C is in the 2 o'clock position i.e. 180° difference between the images. This difference between the images provides the basis for determining whether a contact lens is correctly oriented.

CLAIMS

1. A method for detecting the orientation of a contact lens in a blister package comprising the steps of placing a contact lens having a convex side and a concave side into an open blister, aligning the blister with a light source and a digital camera, detecting a reflected and/or refracted image from the blister and contact lens with the digital camera and determining whether a correctly oriented lens is present from a characteristic of the reflected and/or refracted image with an analysis means.

2. A method according to claim 1 wherein a correctly oriented lens, having a convex and a concave side, has its convex side towards the blister.

3. A method according to any preceding claim wherein the contact lens is a hydrogel contact lens.

4. A method according to any preceding claim wherein the method includes the further steps of adding a hydrating solution to the blister and sealing the blister with a lidstock.

5. The use of an image analysis means for determining whether a correctly oriented hydrogel contact lens is present in a blister package.

6. A production line assembly for the packaging of contact lenses in blister packs wherein the production line assembly comprises a light source for irradiating each lens, a digital camera for detecting a reflected or refracted image from a lens and an image analysis means for determining from said image whether a correctly oriented lens is present in a blister package.

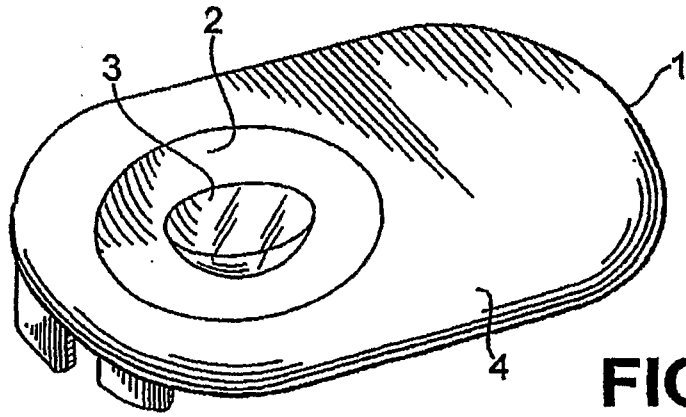


FIG. 1

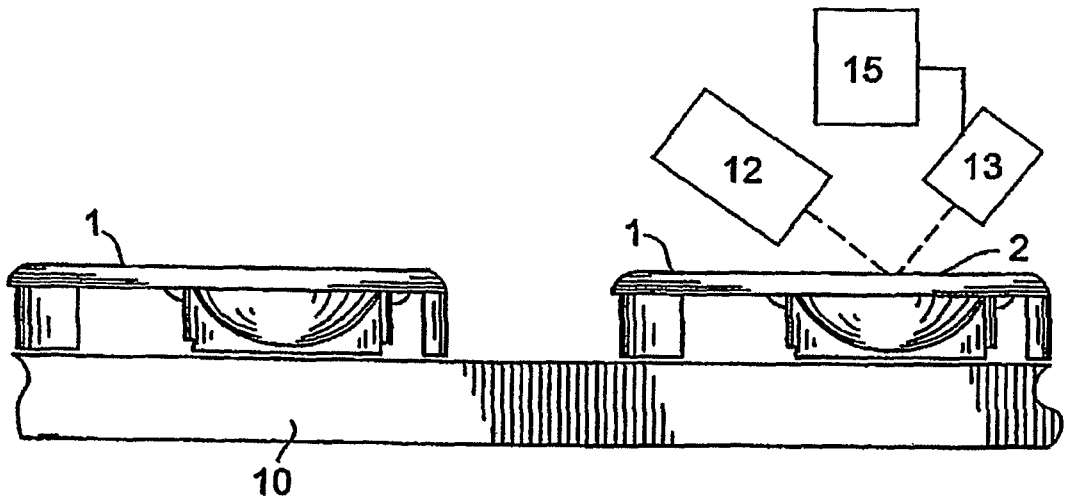


FIG. 2

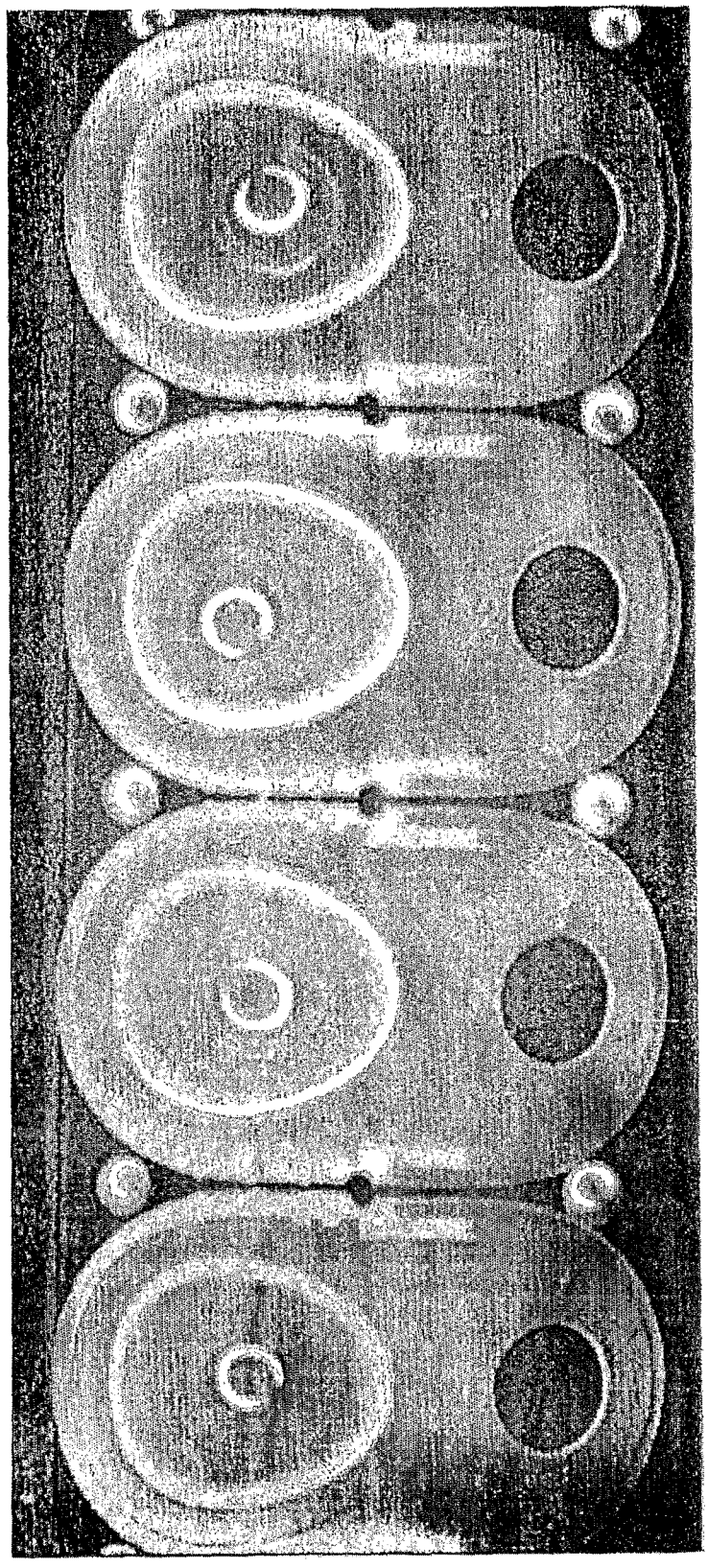


FIG. 3