US 20110290588A1

(19) **United States**

(12) **Patent Application Publication**

Hall et al.

(10) **Pub. No.: US 2011/0290588 A1**

(43) **Pub. Date: Dec. 1, 2011**

(54) **TEMPORARY VIEWING PLATFORMS**

(75) Inventors: **Charles Hall**, Hants (GB); **Chris Pitchford**, Farnham Surrey (GB)

(73) Assignee: **HEXAGO DECK LIMITED**, Hants (GB)

(21) Appl. No.: **12/996,621**

(22) PCT Filed: **May 13, 2009**

(86) PCT No.: **PCT/EP2009/055774**

§ 371 (c)(1),
(2), (4) Date: **Jul. 29, 2011**

(30) **Foreign Application Priority Data**

Jun. 6, 2008 (GB) 0810416.8
Dec. 3, 2008 (GB) 0822097.2

Publication Classification

(51) **Int. Cl.**
E04G 1/15 (2006.01)
E04G 5/14 (2006.01)

(52) **U.S. Cl.** **182/113**

(57) **ABSTRACT**

A modular construction kit adapted to construct both a hexagonal and an elongate linear shaped horizontal free-standing temporary viewing platform and combinations thereof, the modular construction kit comprising a plurality of components adapted to be attachable and detachable from each other whereby the temporary viewing platform can be readily constructed and taken apart, the plurality of components comprising:

a plurality of support legs, each support leg being at least six feet long;

a plurality of floor plates, comprising at least six floor plates having an equilateral triangular shape or an isosceles trapezoid shape;

a plurality of handrail elements adapted to be mounted around a circumference of the temporary viewing platform for preventing a user from falling over an edge of the temporary viewing platform; and

at least one stair frame adapted to be mounted to the temporary viewing platform whereby a user can climb the stair frame to access the temporary viewing platform.

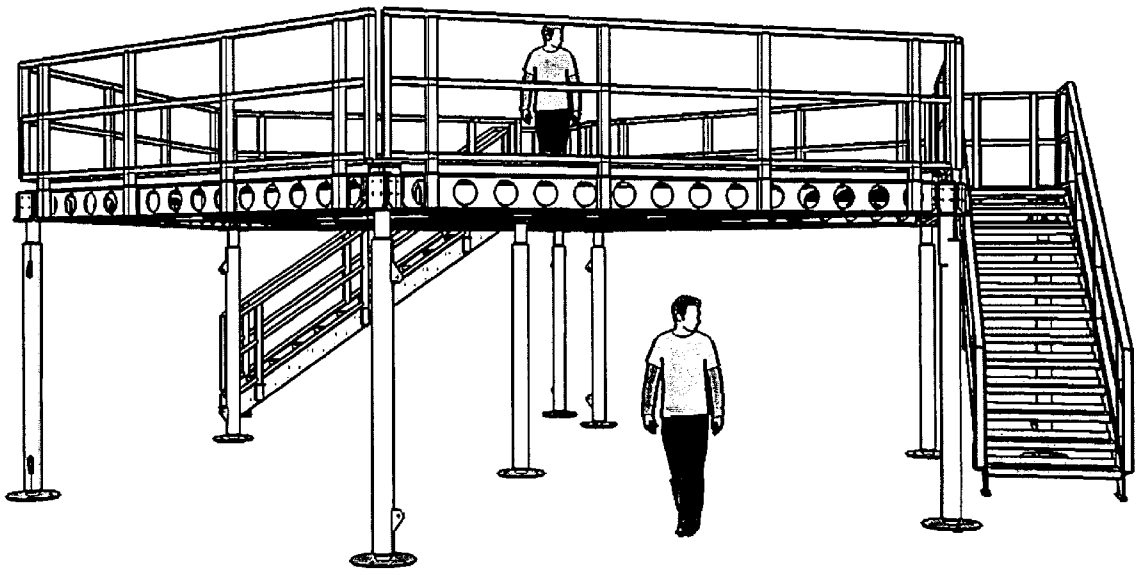

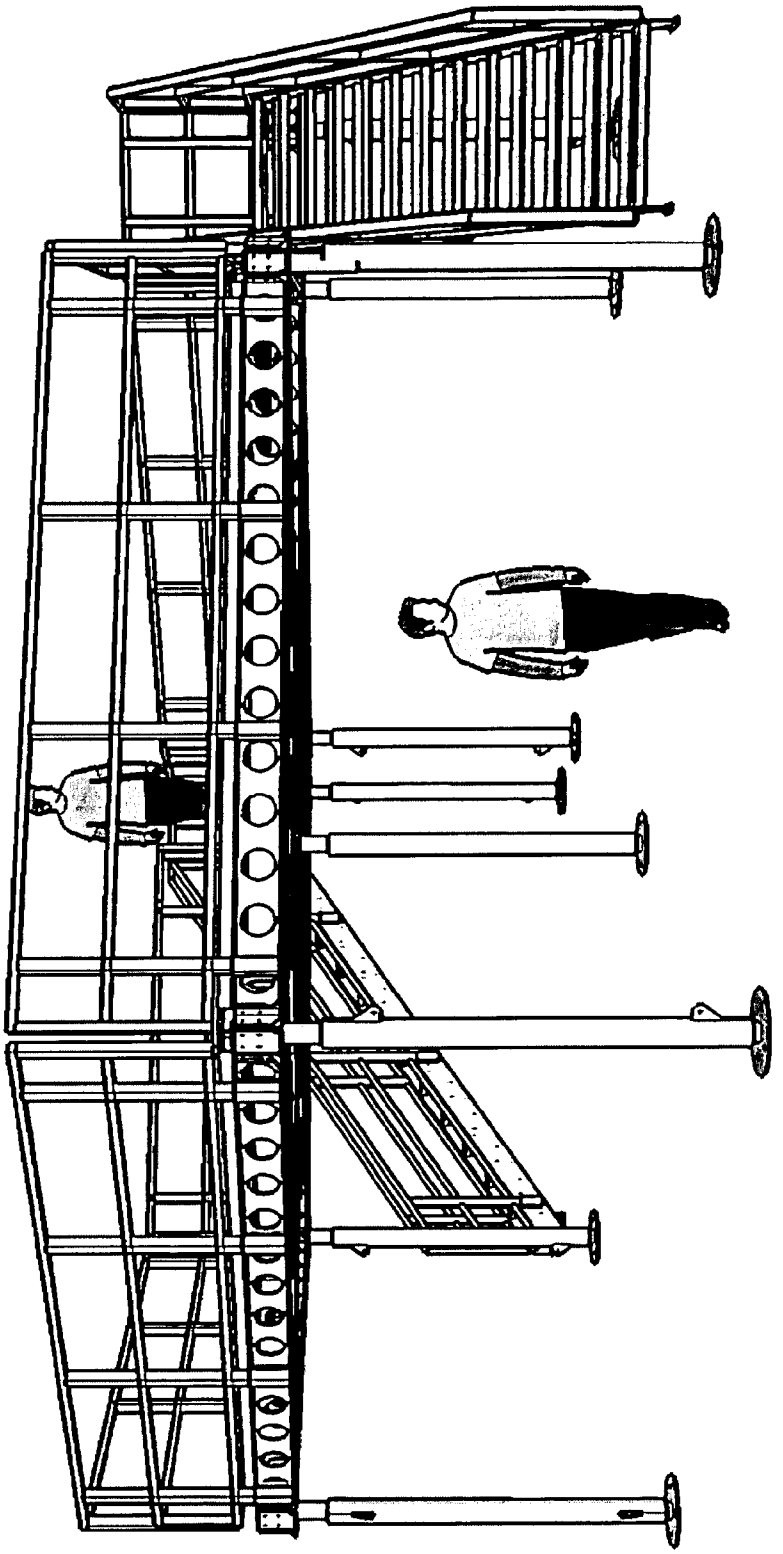

Fig 1

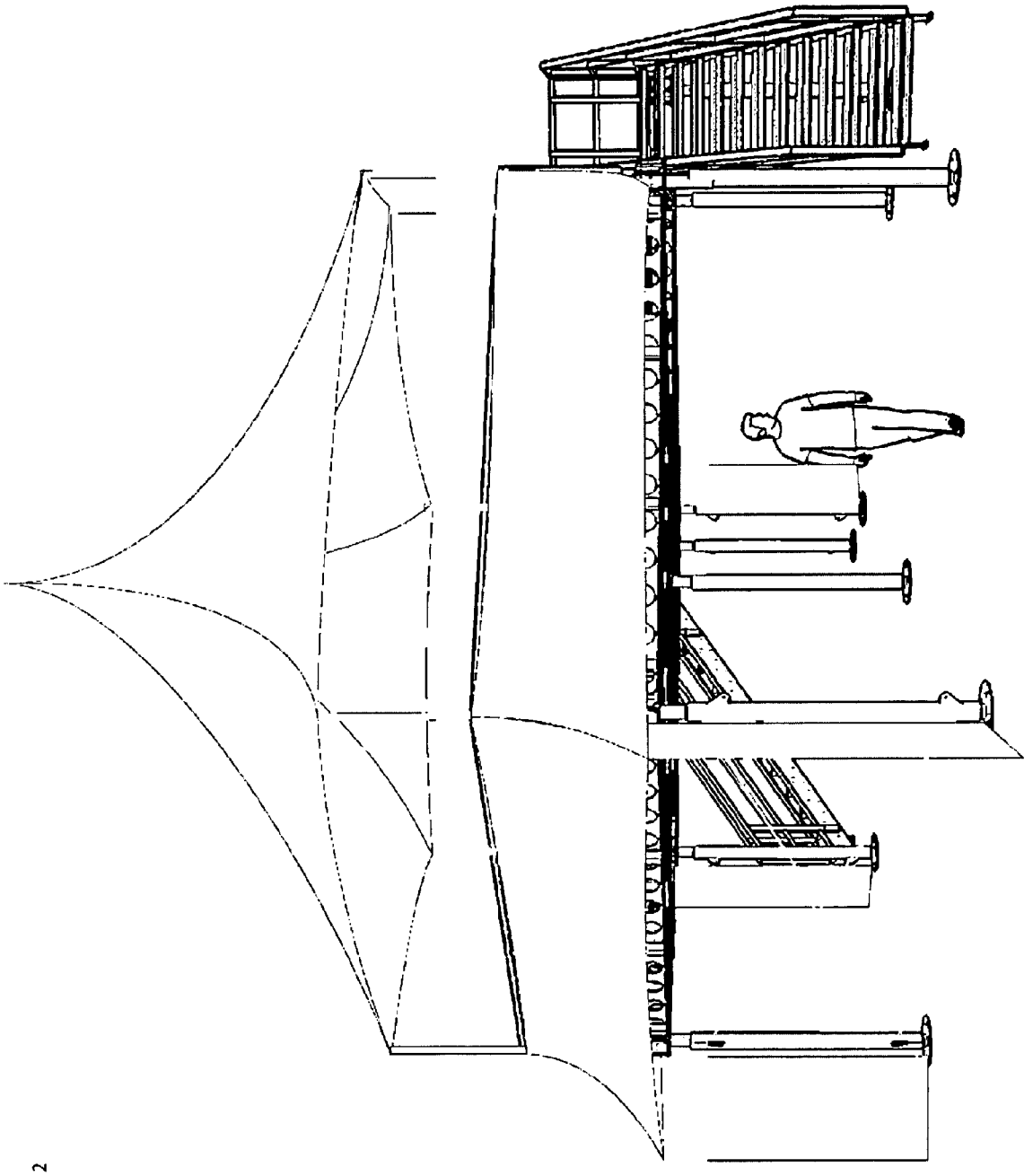

Fig 2

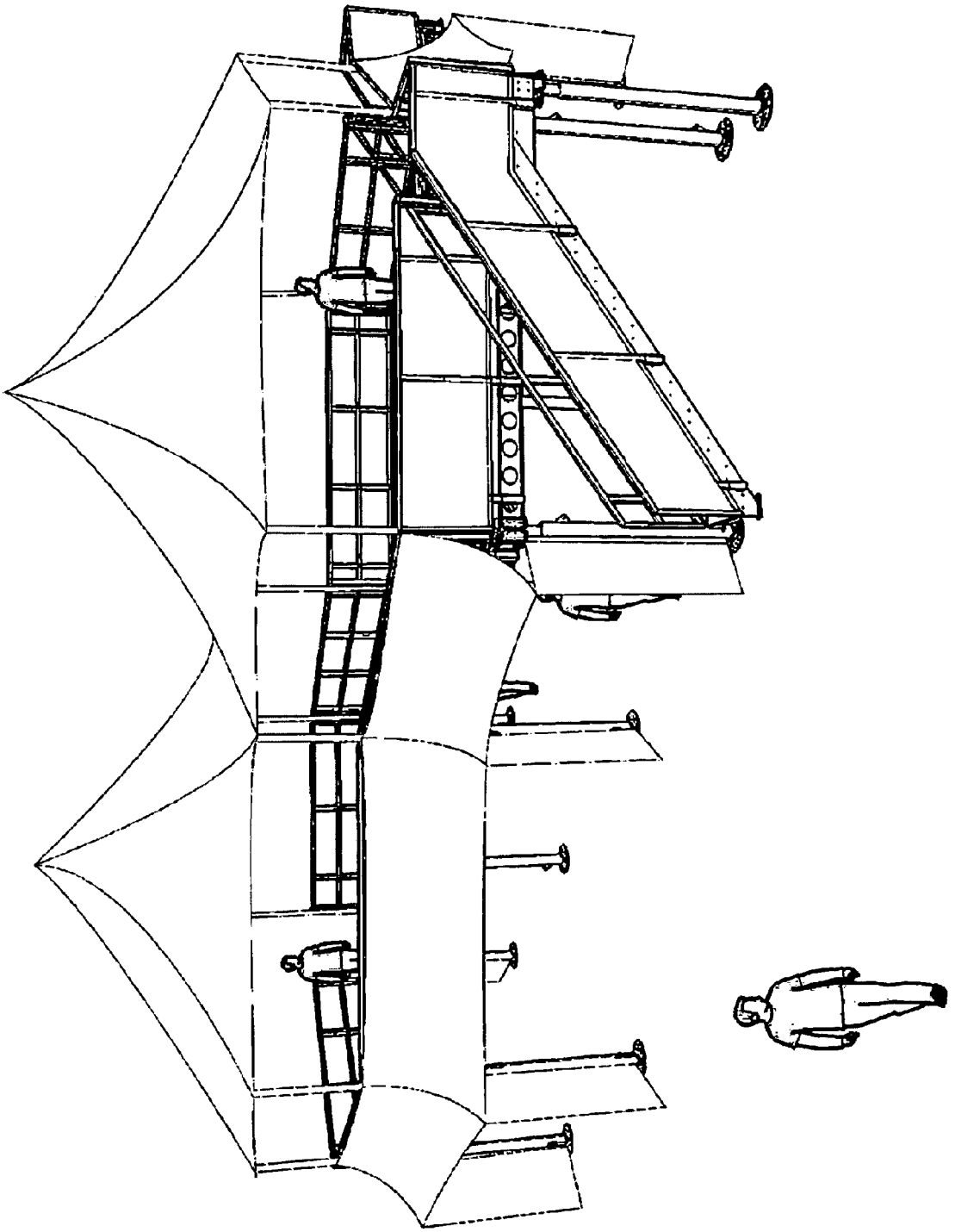

Fig 3

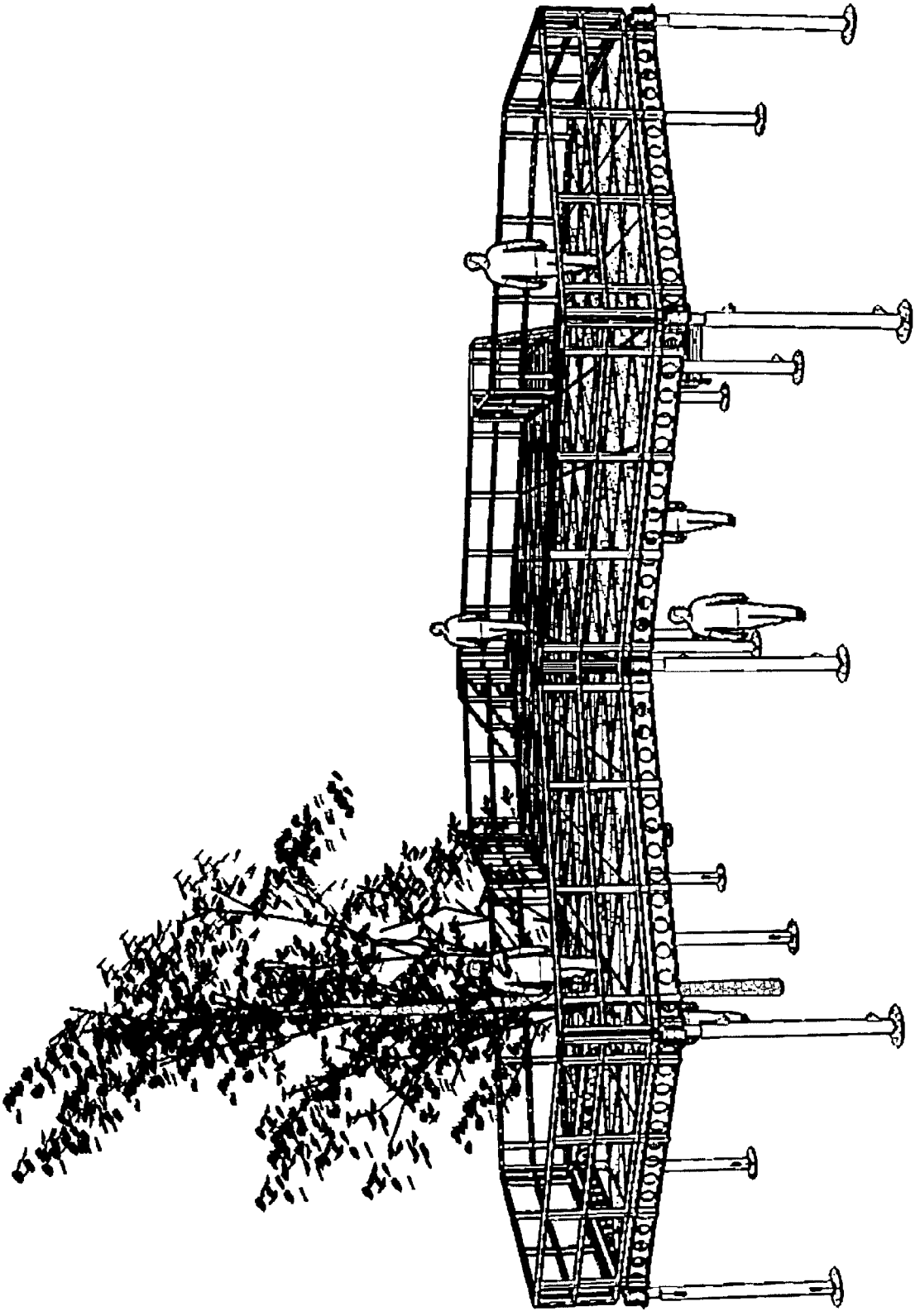

Fig 4

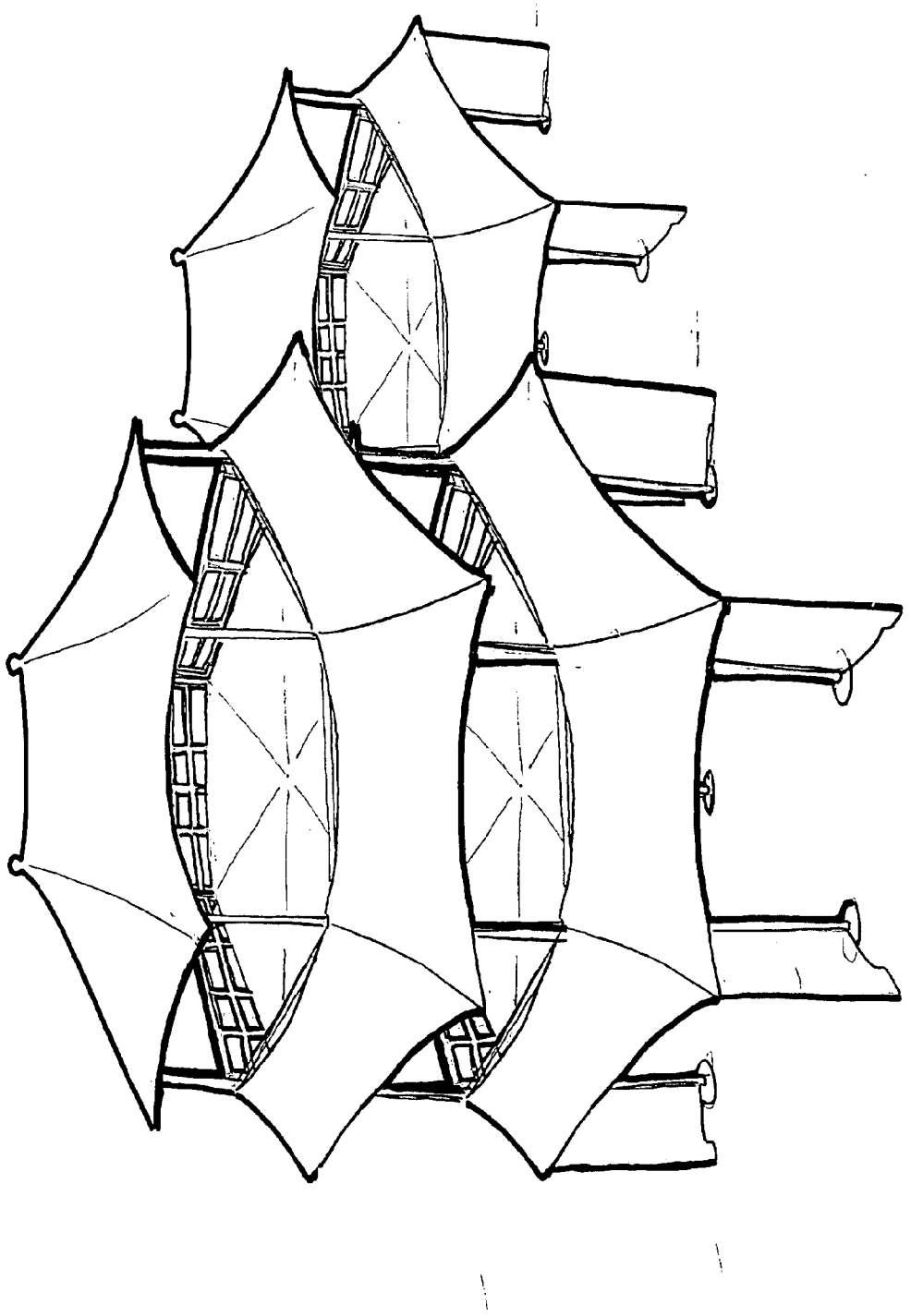

Figure 5

Fig 6

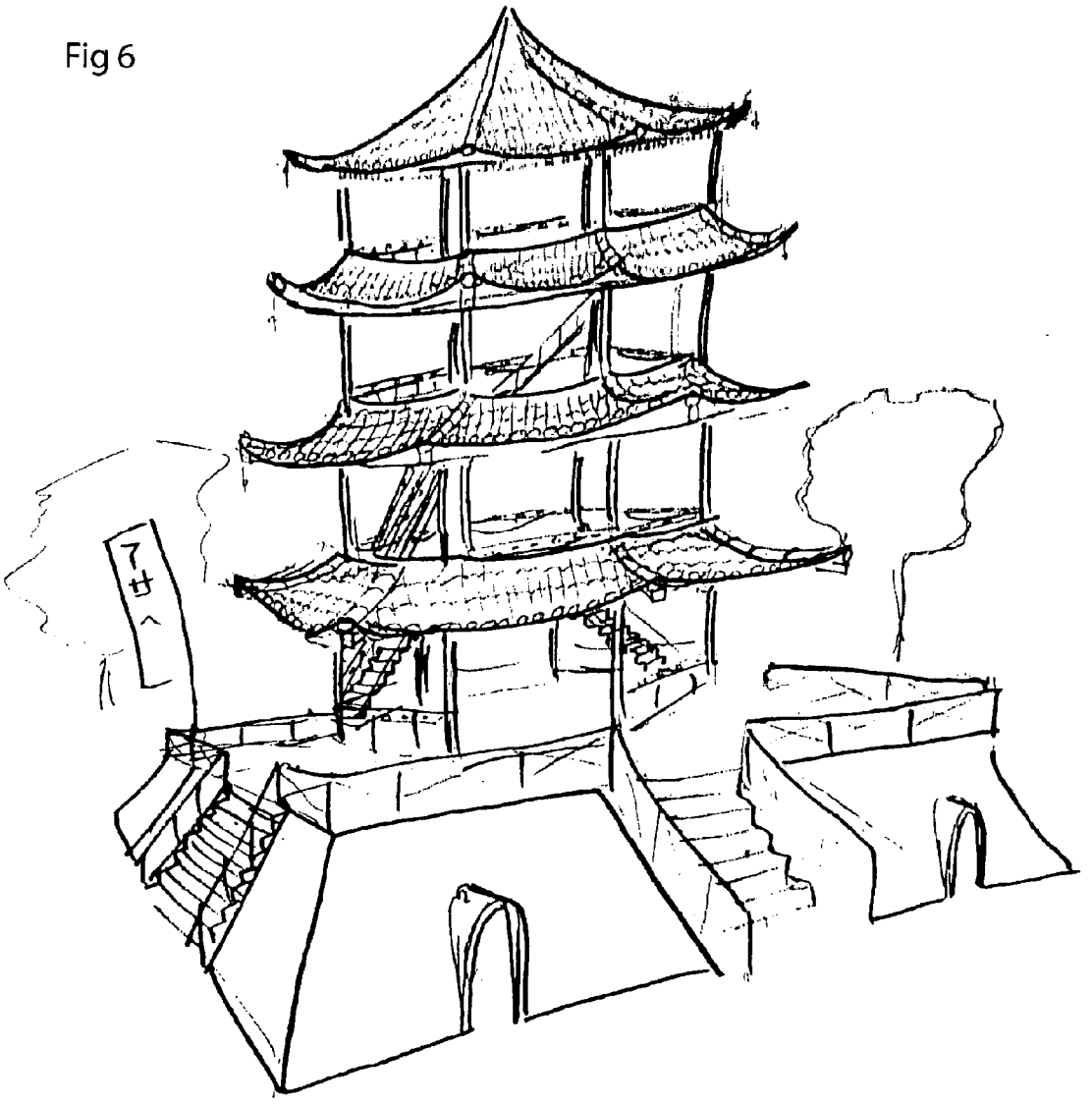

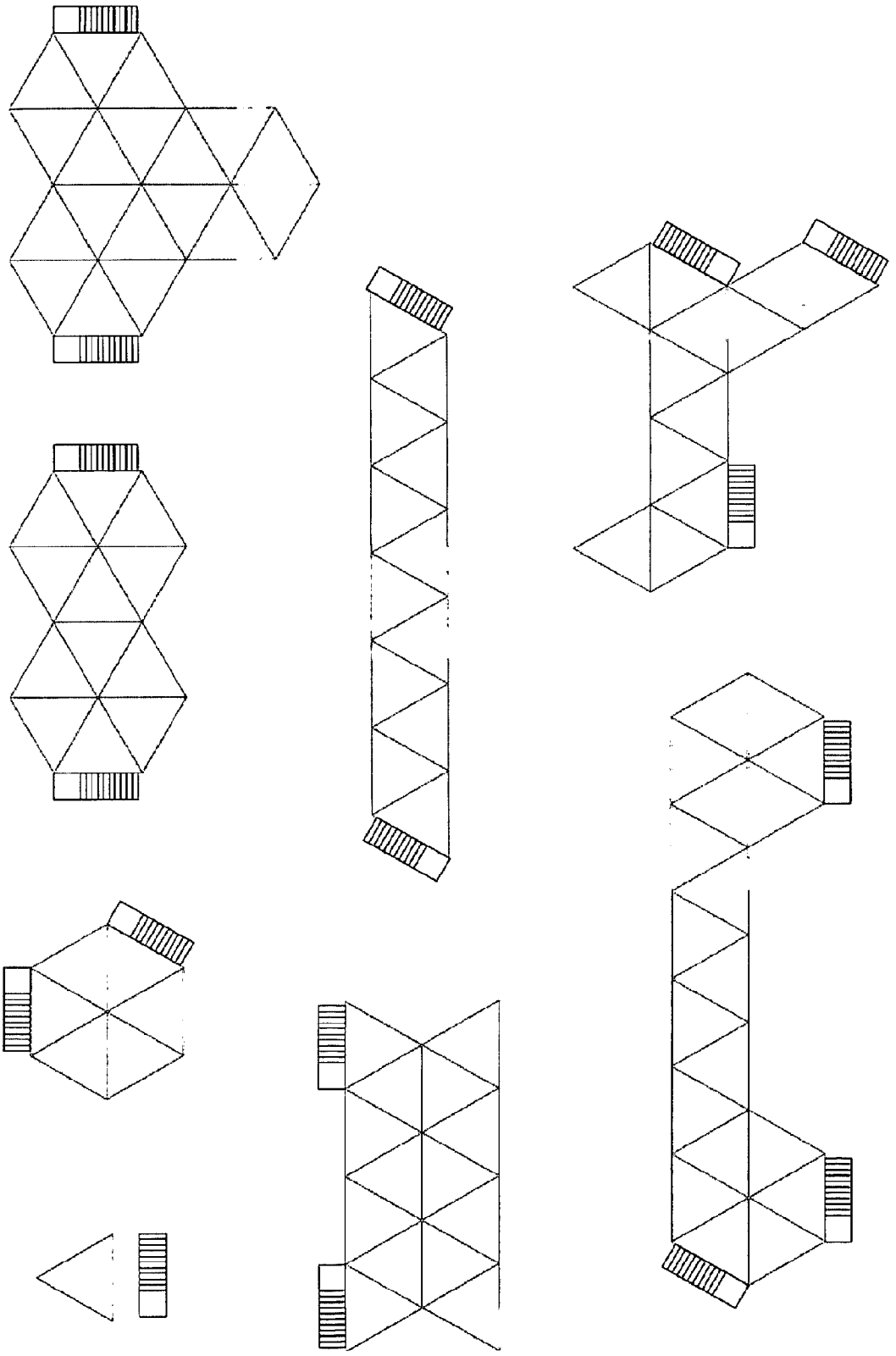

7 / 30

Figure 7

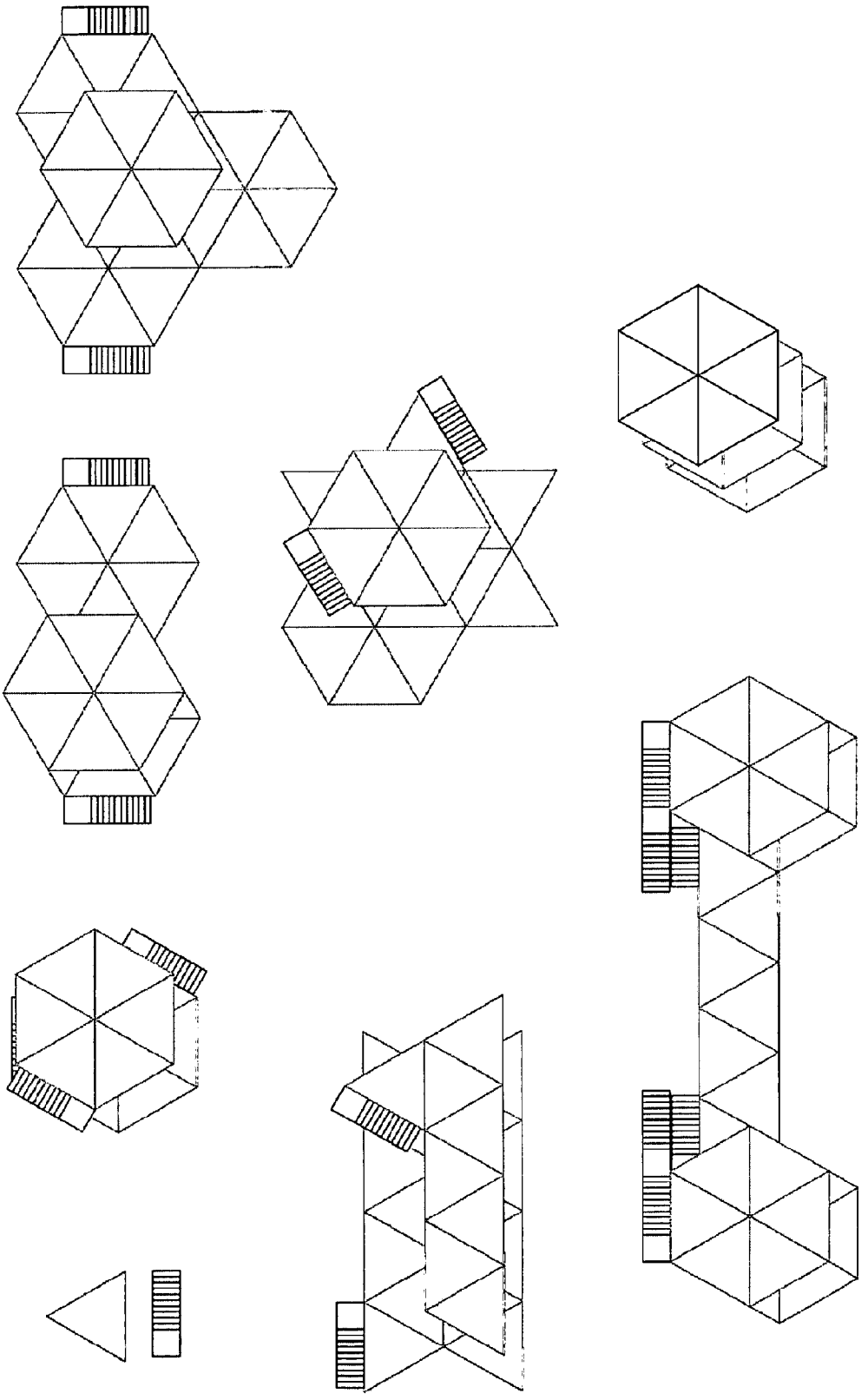

Figure 8

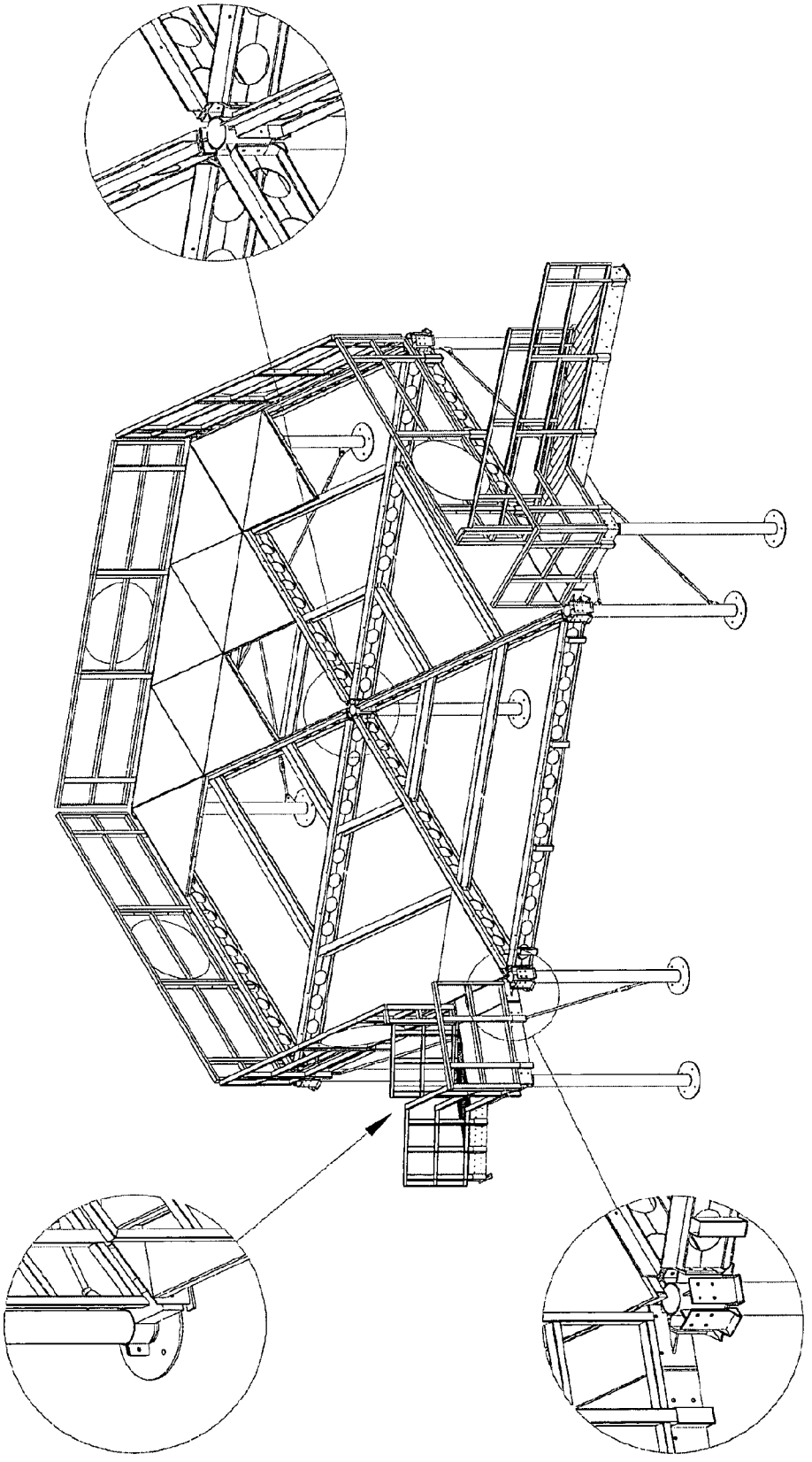

Figure 9

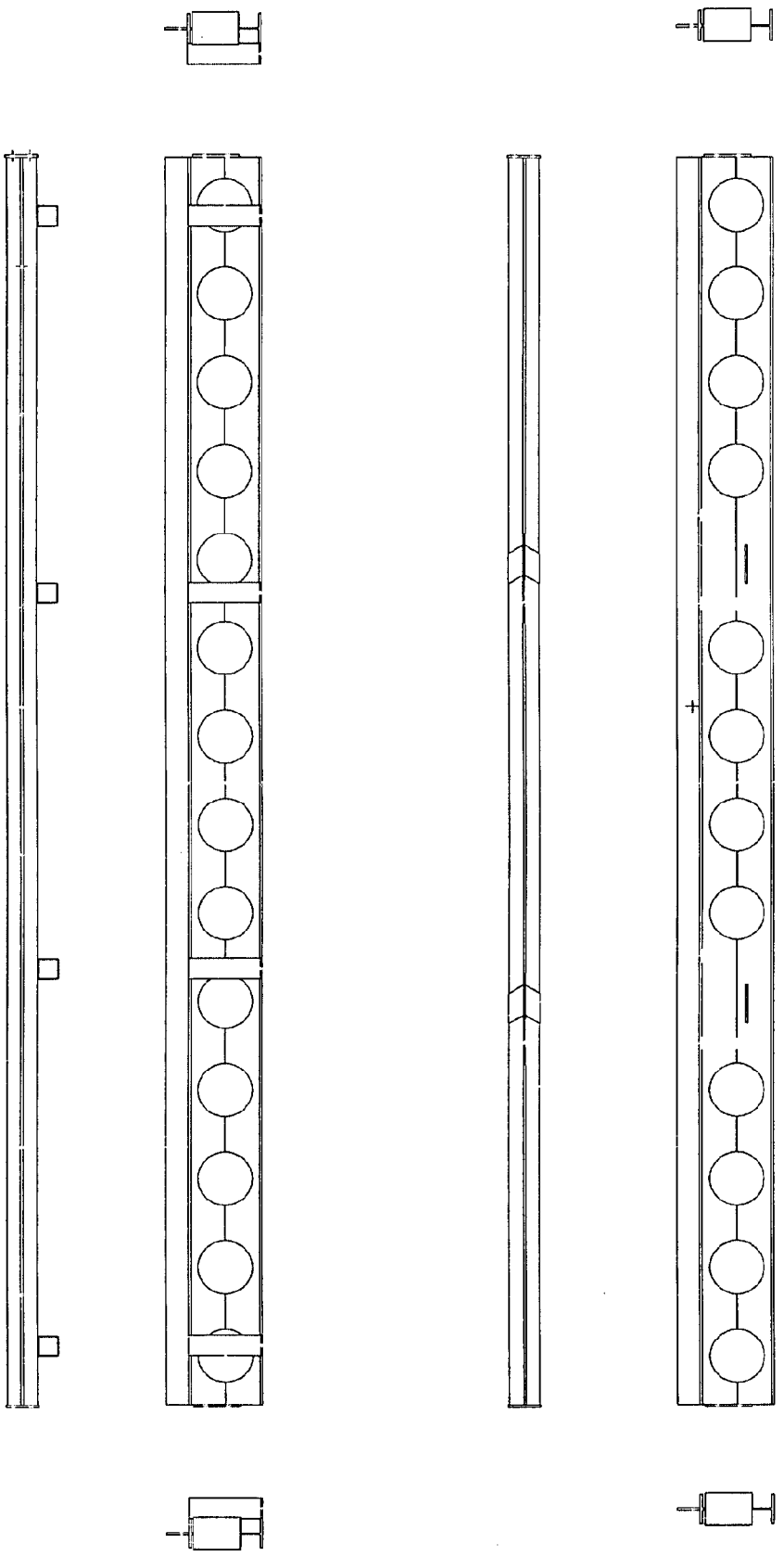

Figure 10

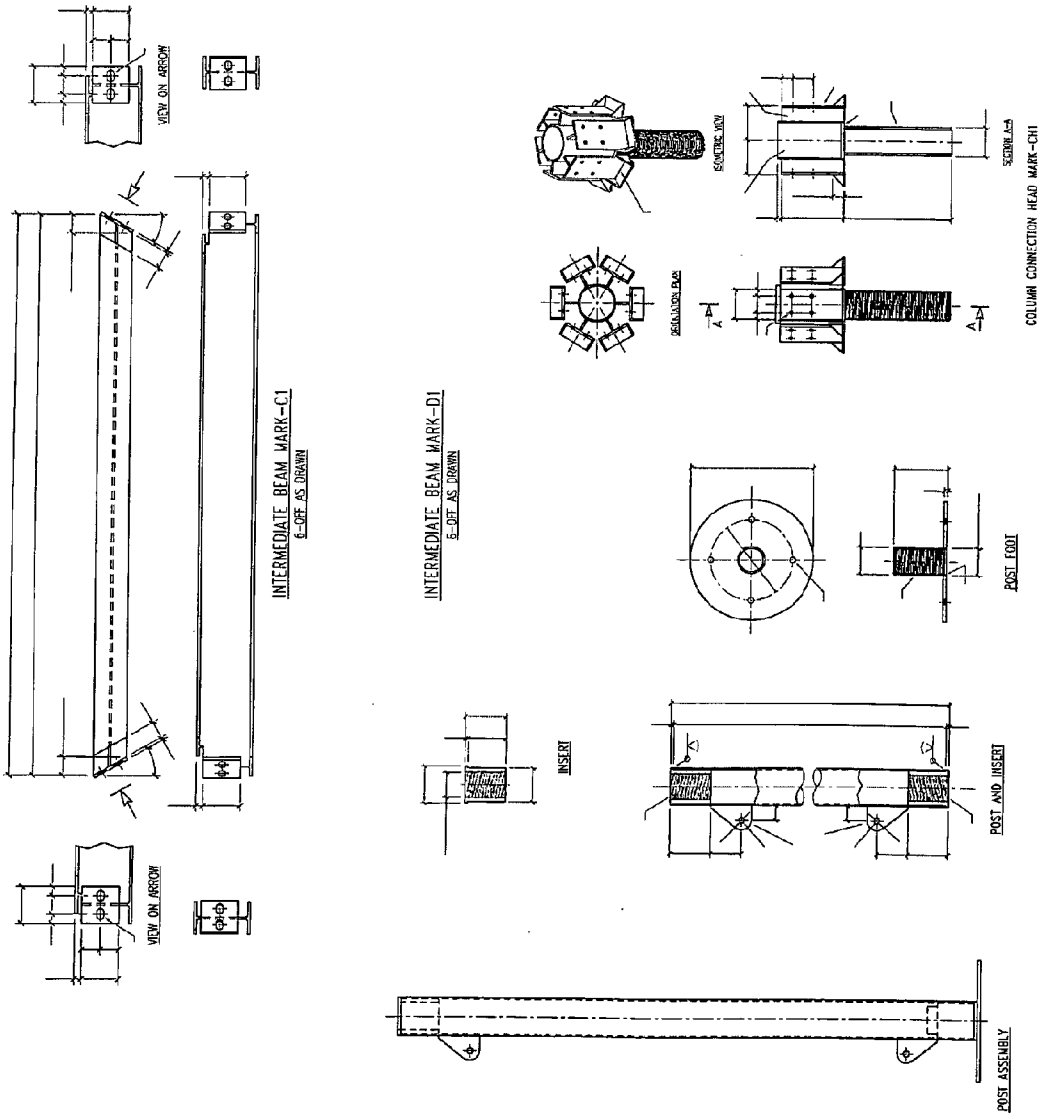
VIEW ON ARROW
INTERMEDIATE BEAM MARK-C1
6-OFF AS DRAWN
VIEW ON ARROW
INTERMEDIATE BEAM MARK-D1
6-OFF AS DRAWN
ISOMETRIC VIEW
SECTION A-A
COLUMN CONNECTION HEAD MARK-CH1
INSERT
POST FOOT
POST AND INSERT
POST ASSEMBLY

Figure 11

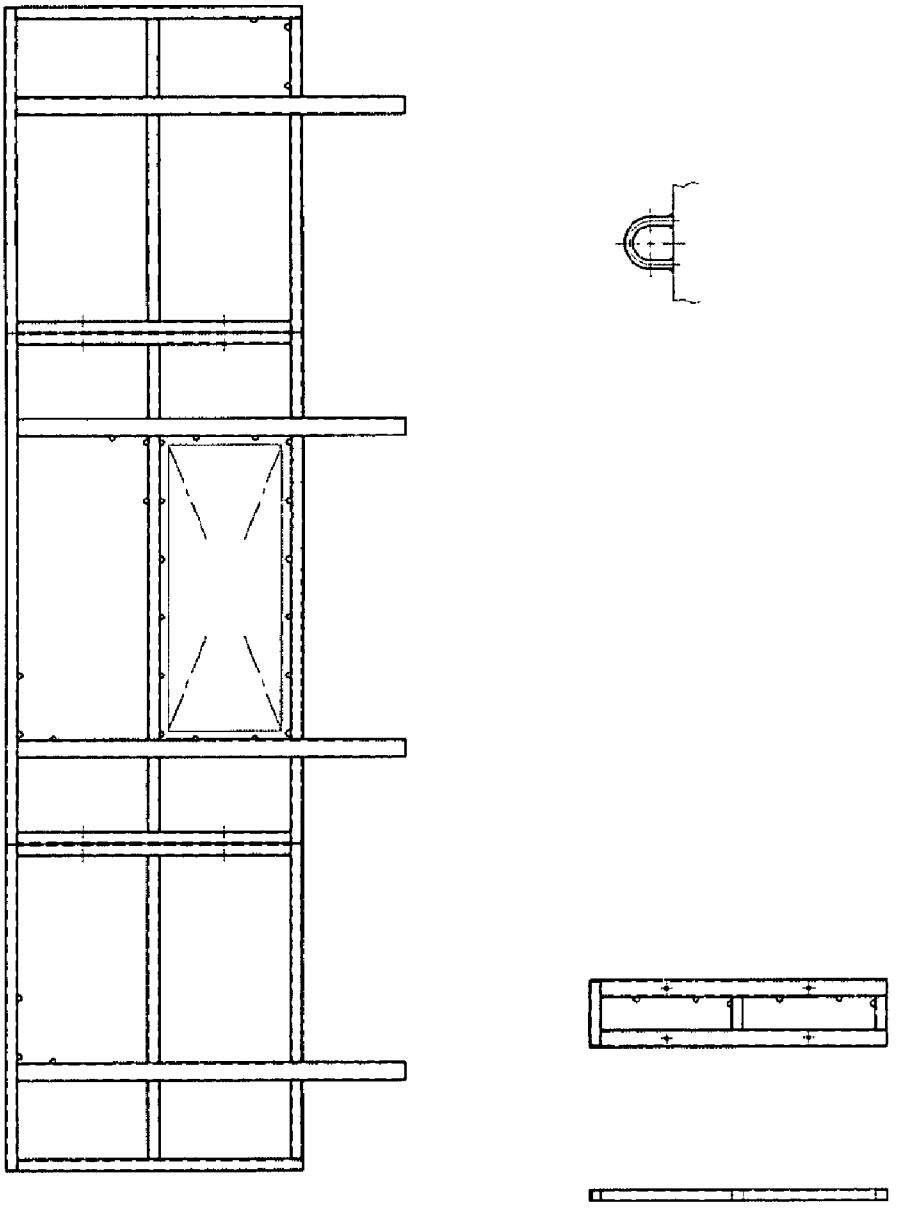

Figure 12

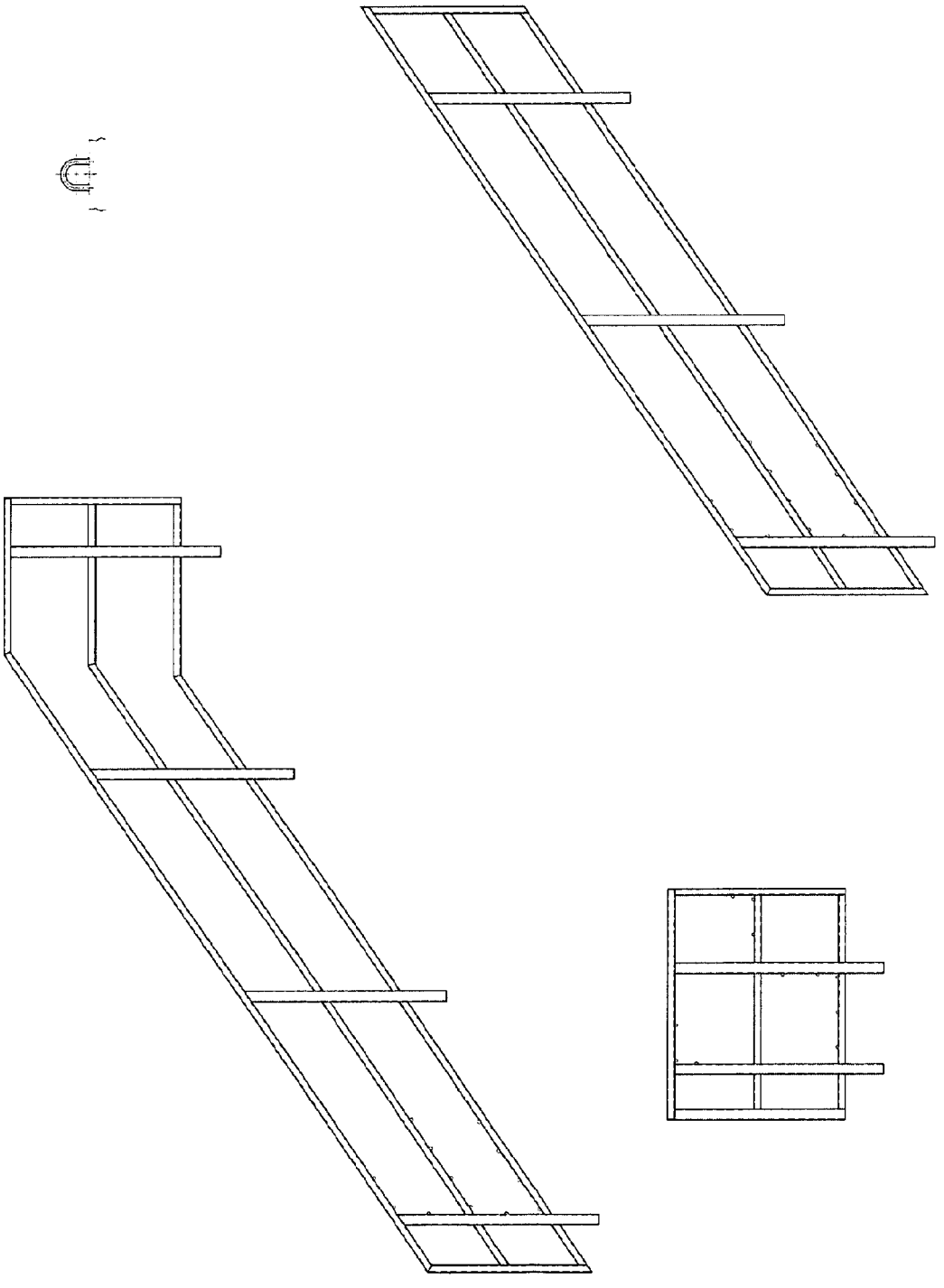

Figure 13

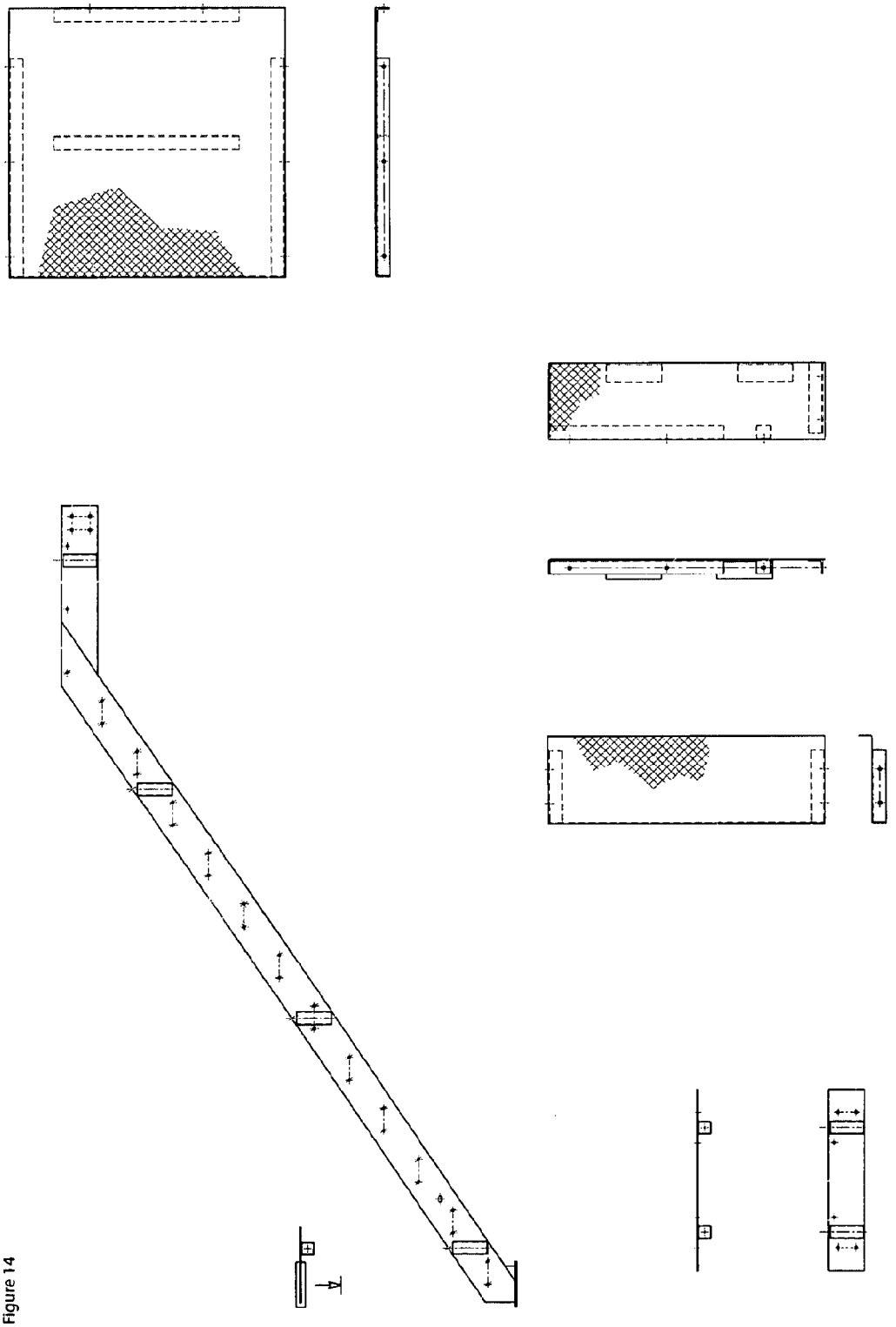

Figure 14

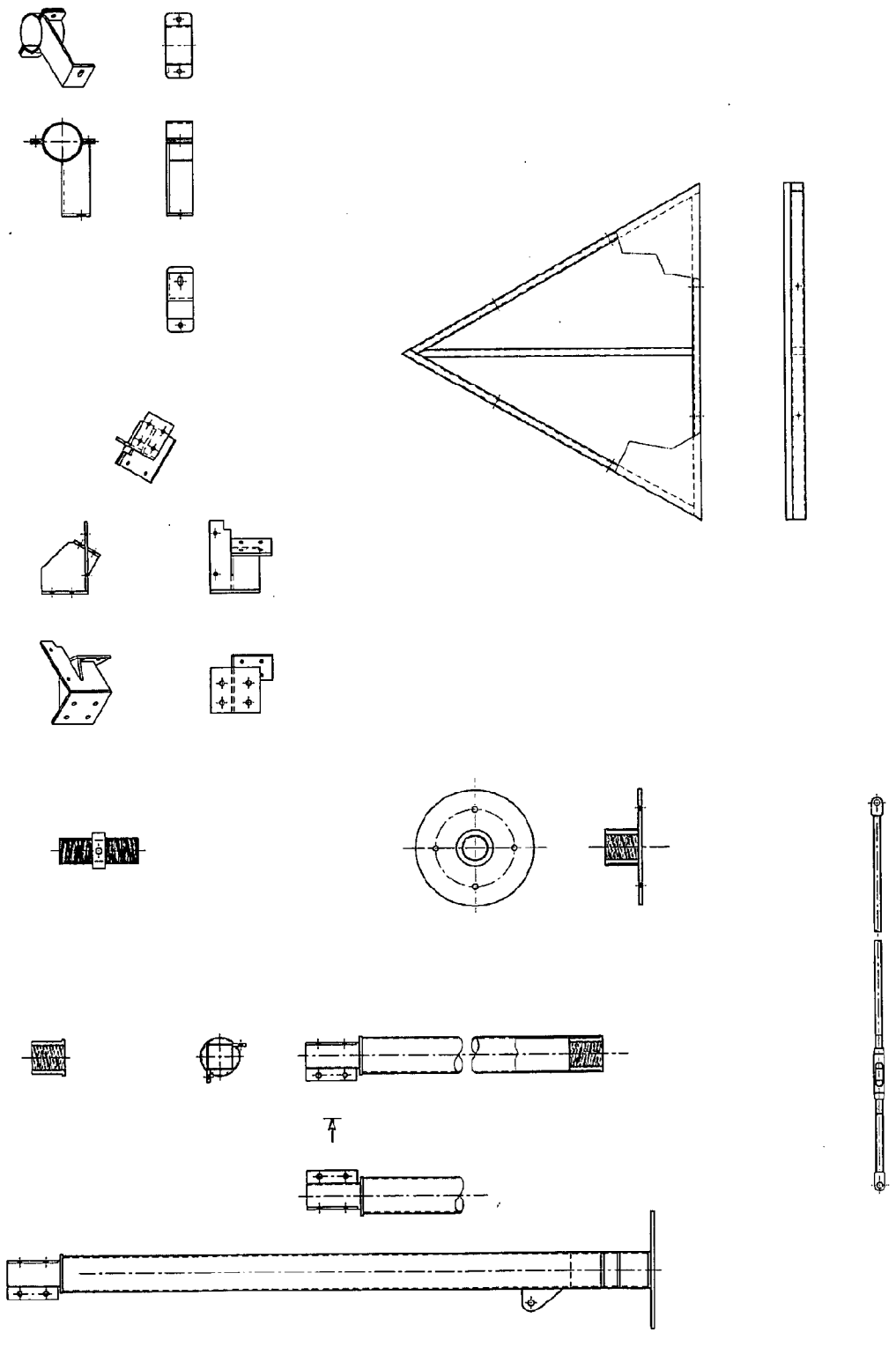

Figure 15

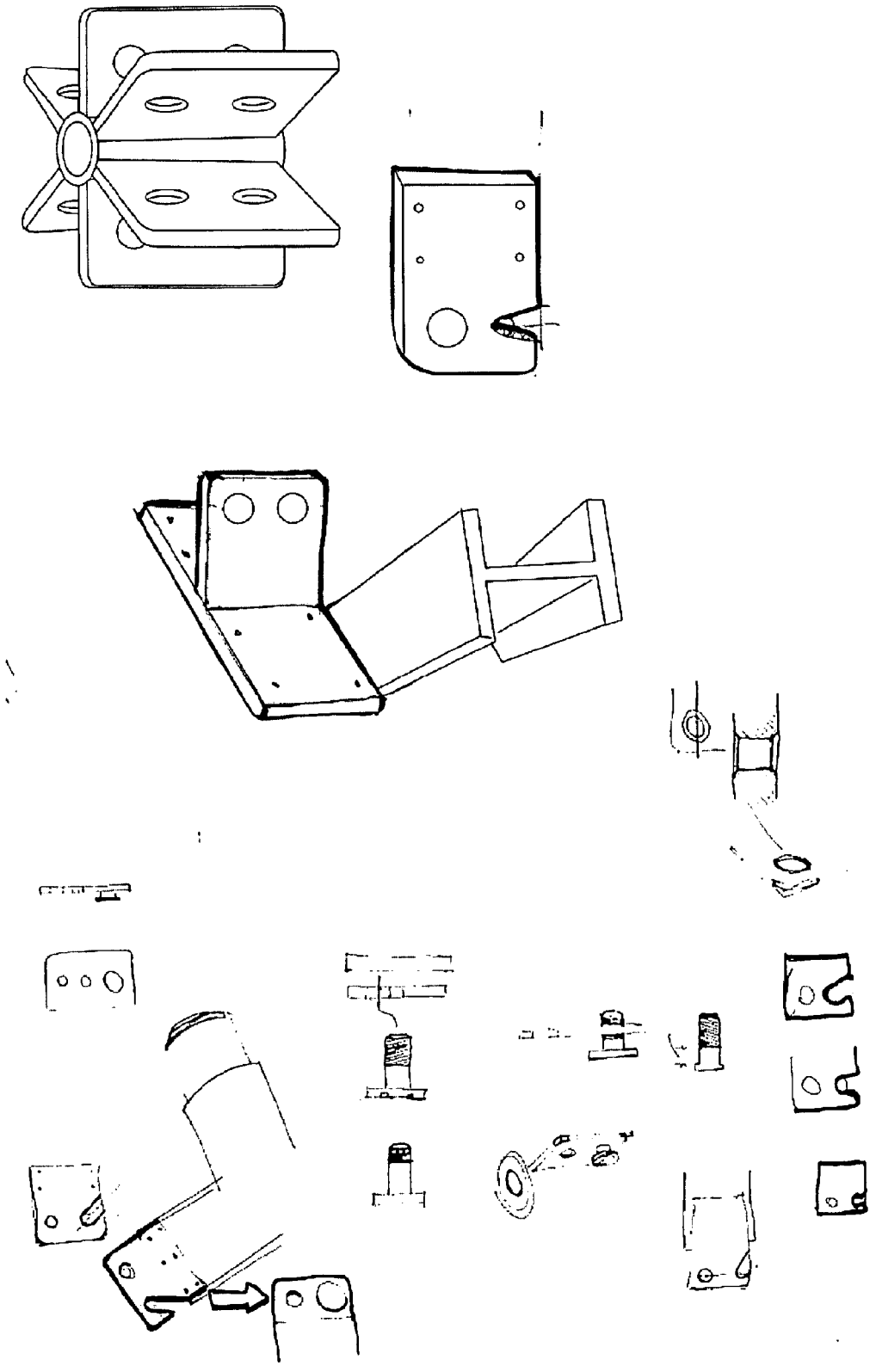

Figure 16

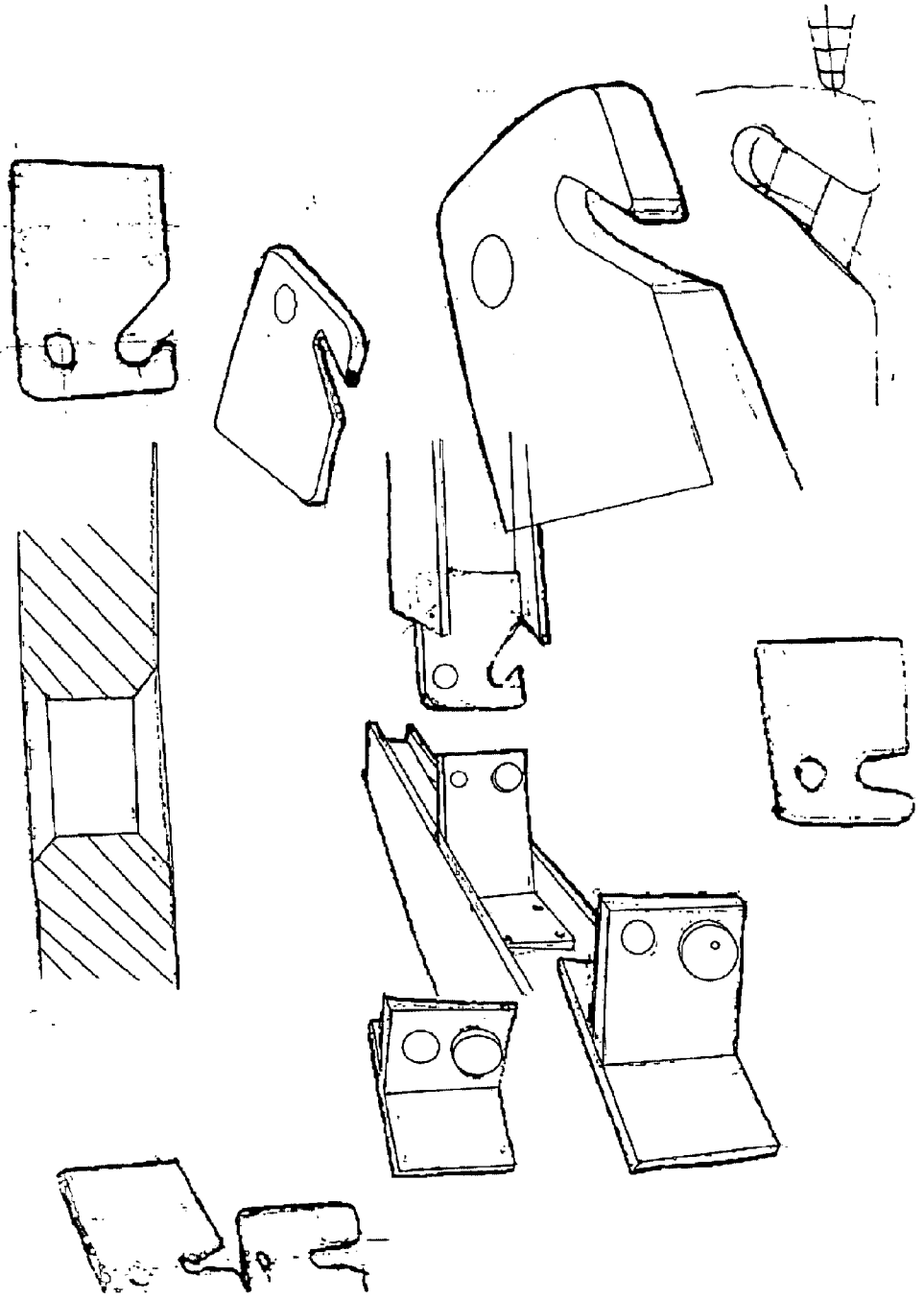

Figure 17

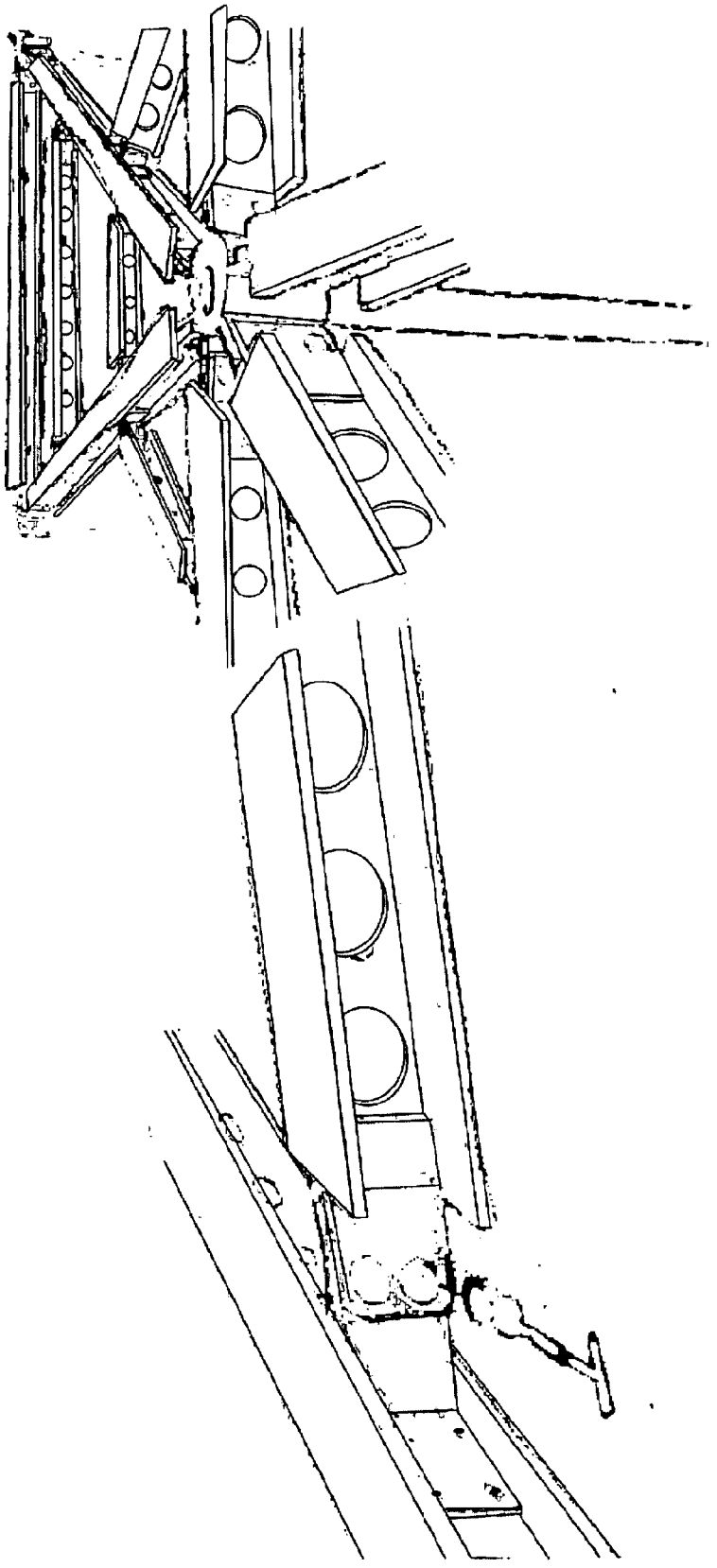

Figure 18

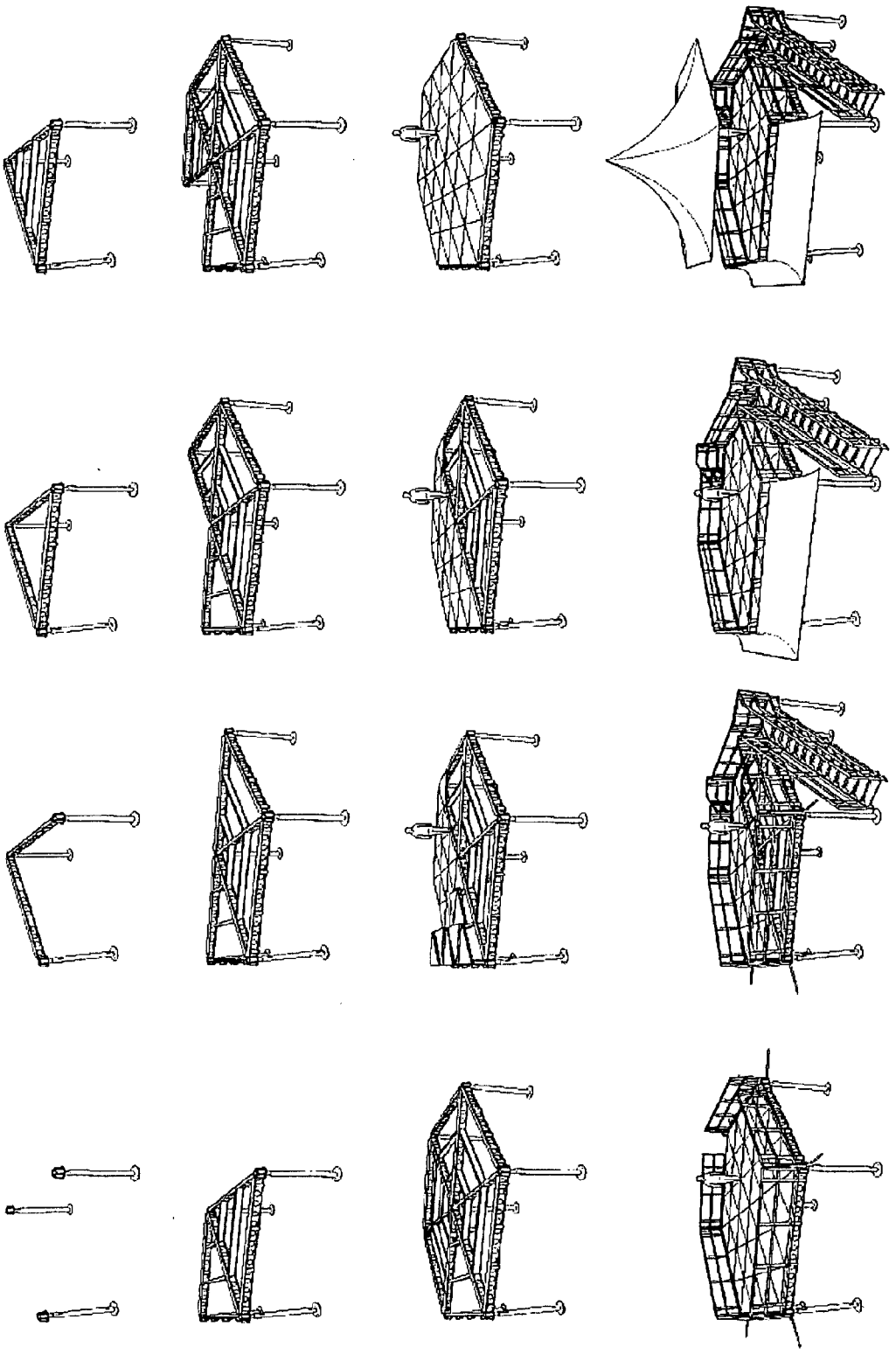

Fig 19

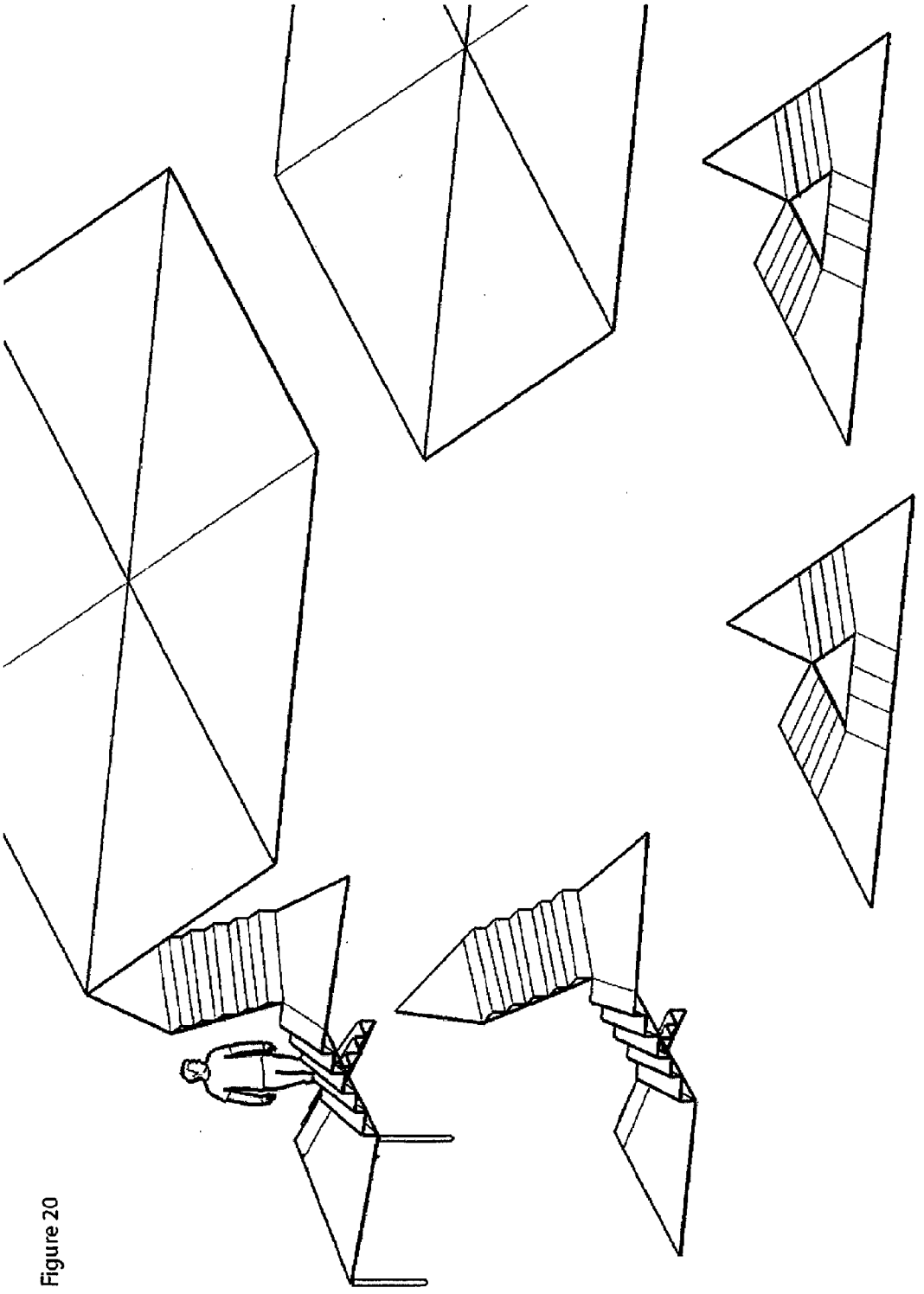

Figure 20

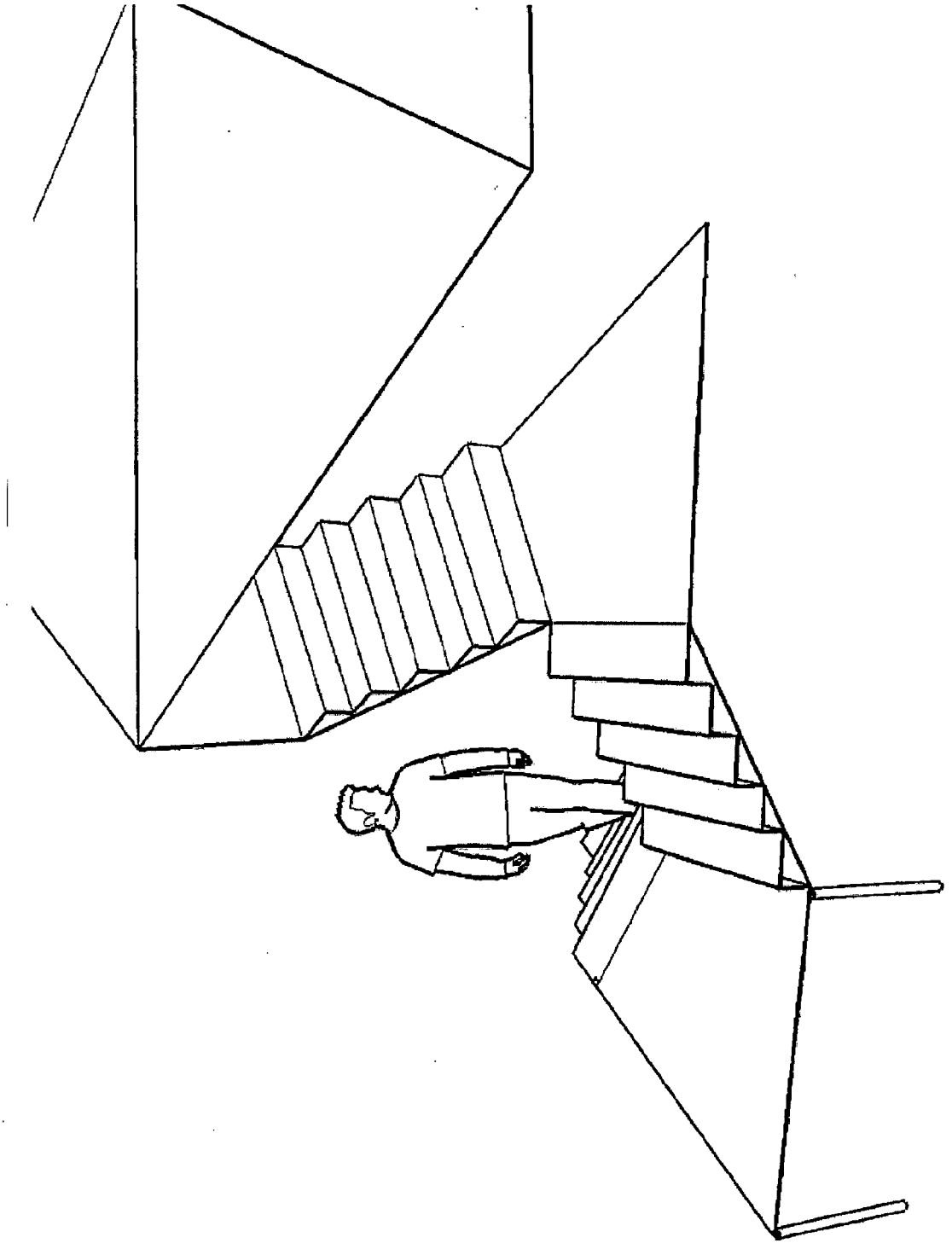

Figure 21

Figure 22

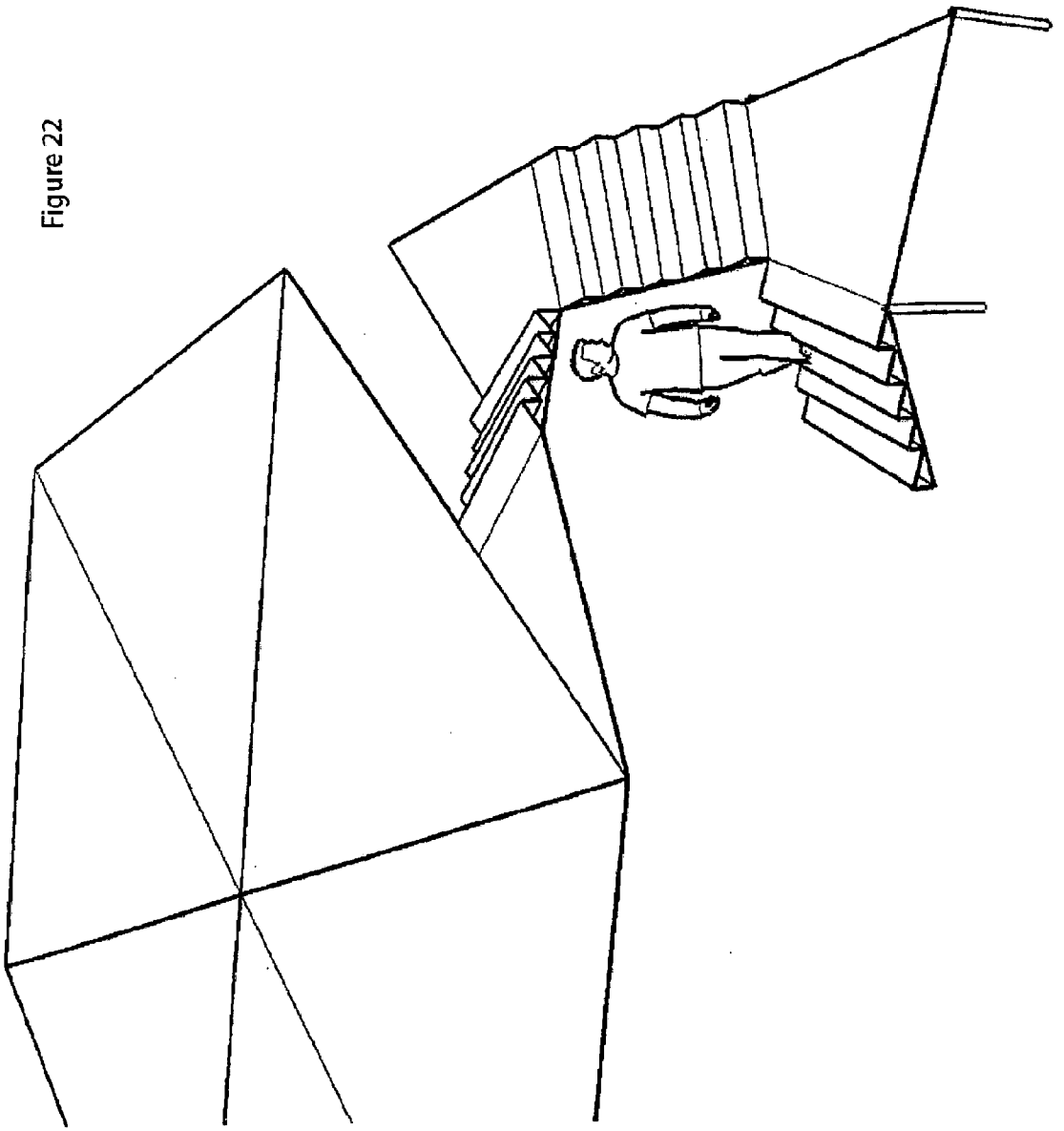

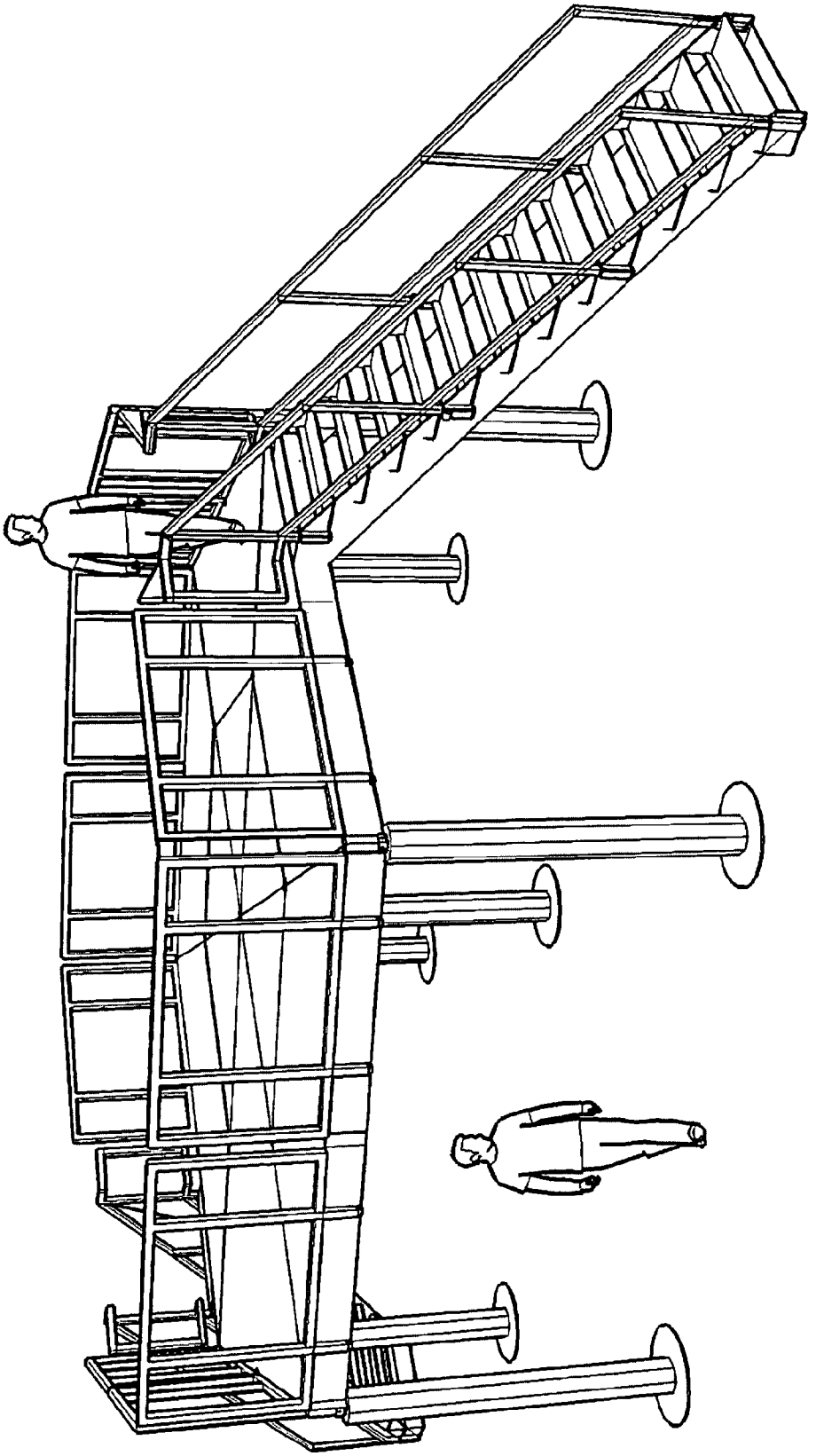

Figure 23

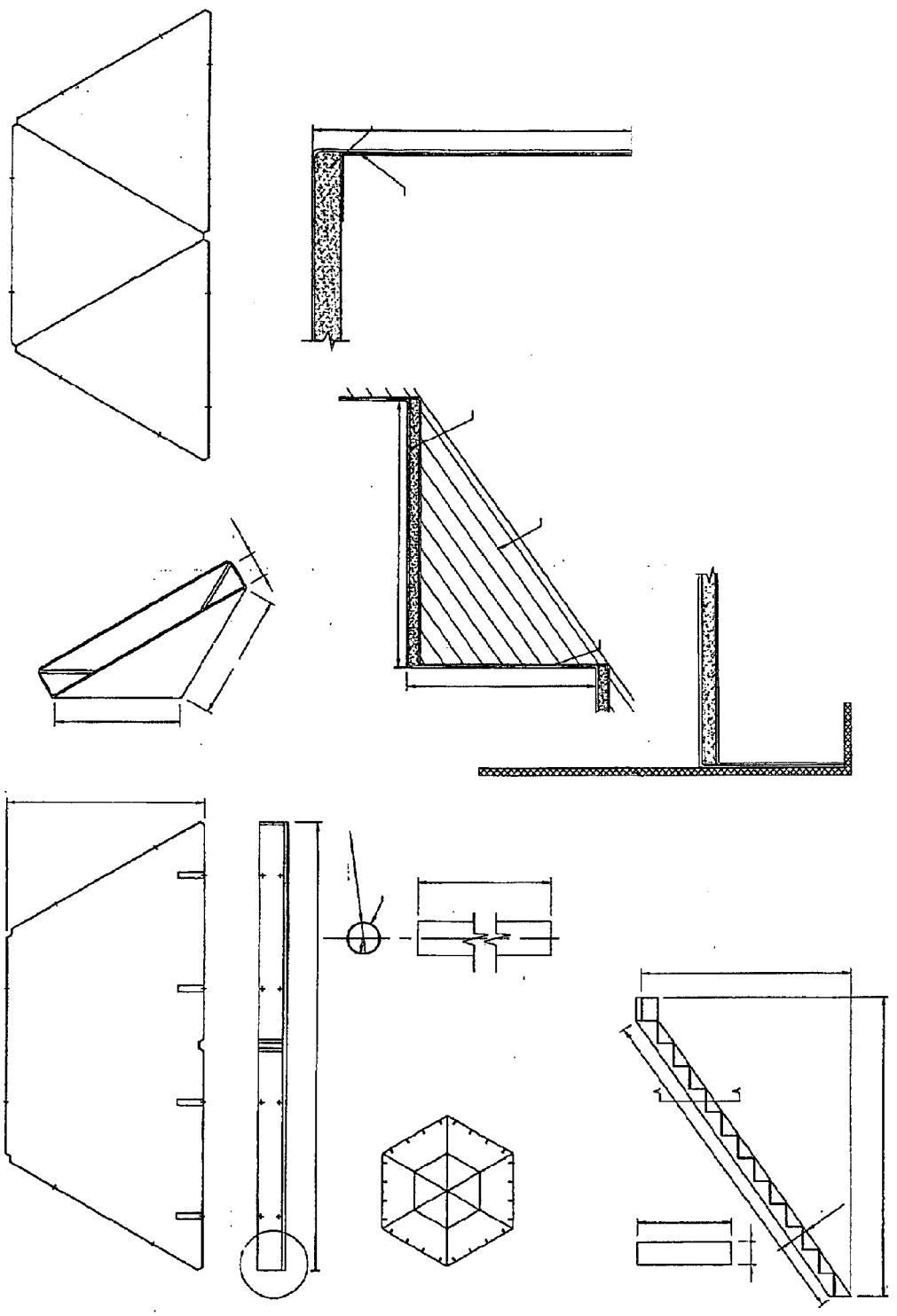

Figure 24

Figure 25

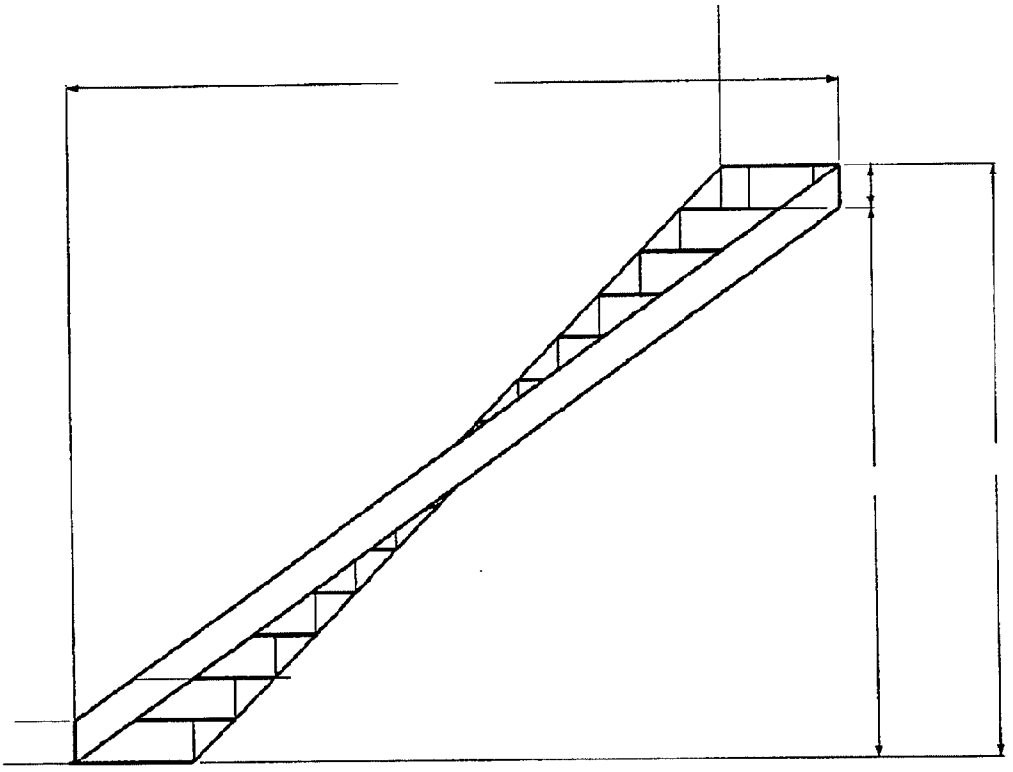

Figure 26

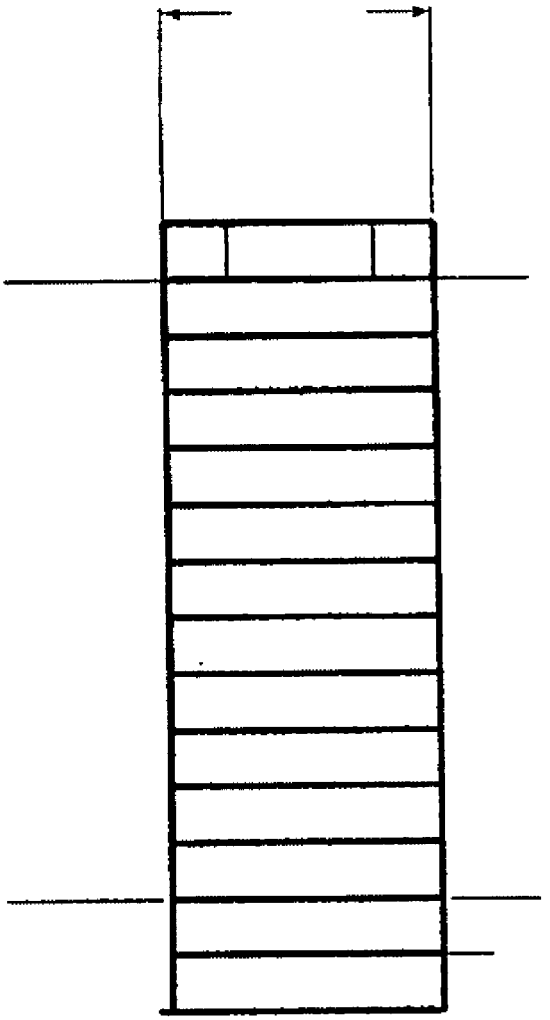

Figure 27

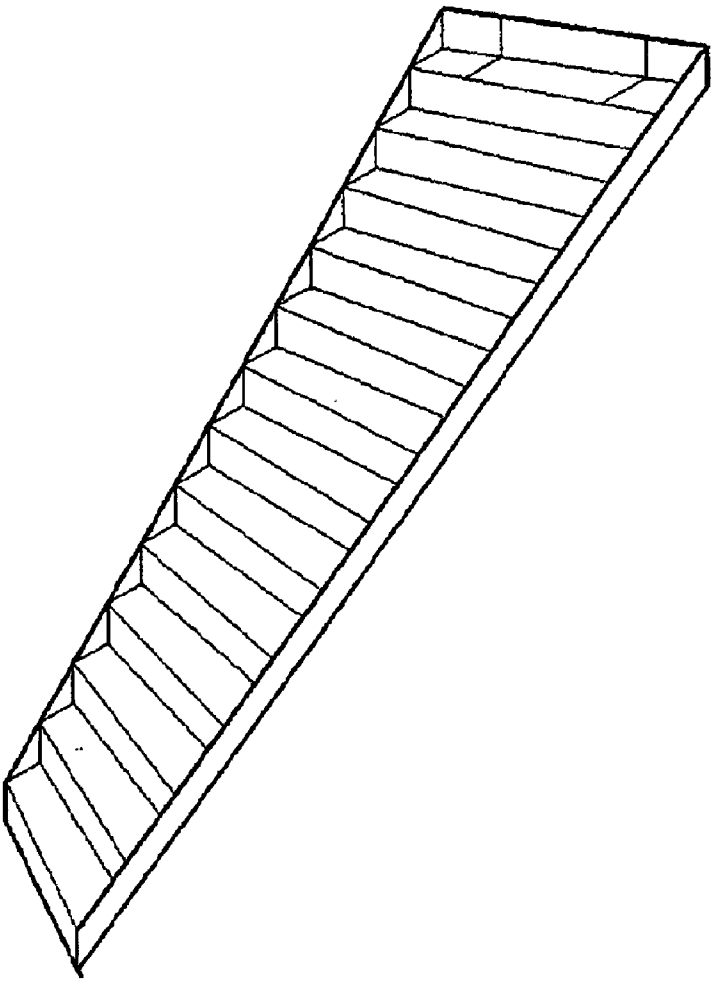

Figure 28

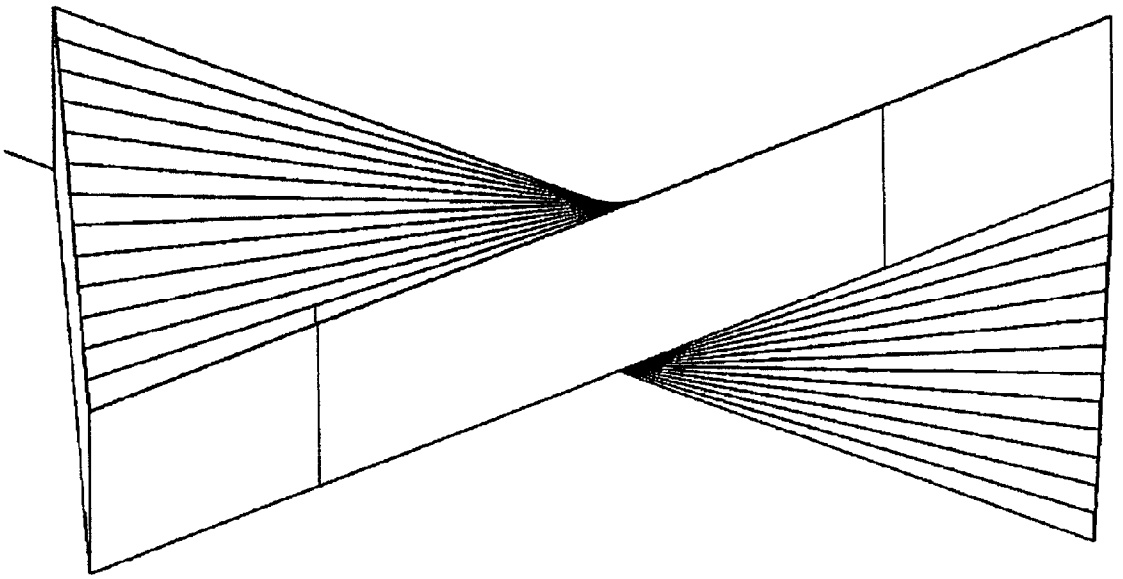

Figure 29

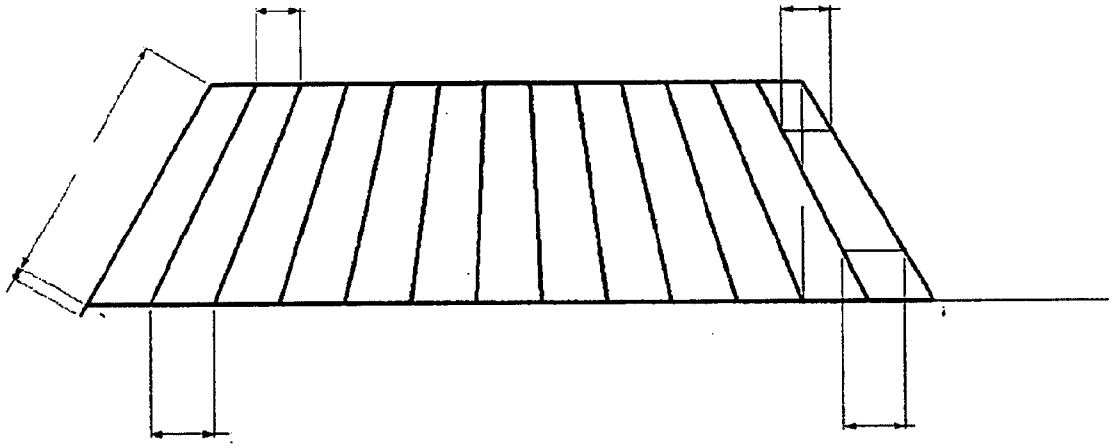

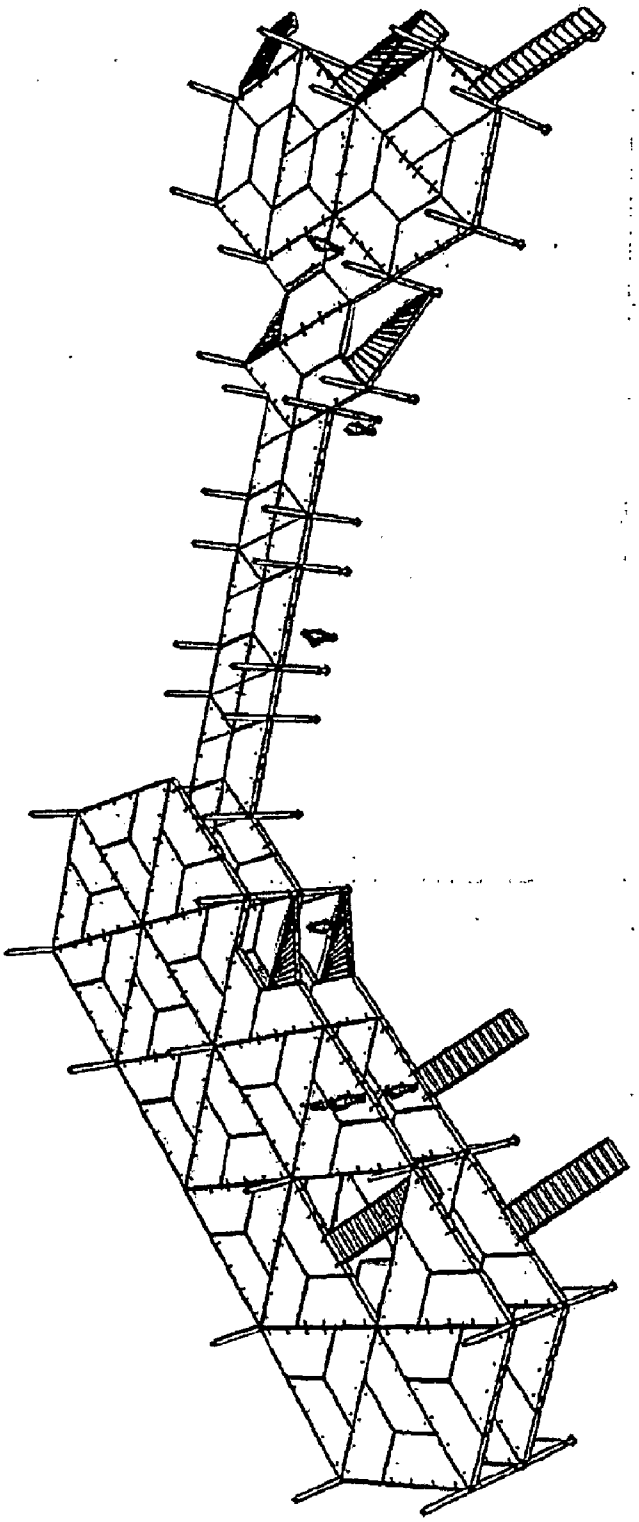

Figure 30

TEMPORARY VIEWING PLATFORMS

FIELD OF THE INVENTION

[0001] The present invention relates to temporary viewing platforms and modular construction kits for construction thereof.

BACKGROUND OF THE INVENTION

[0002] Temporary viewing platforms for the events industry are known in the art. Such temporary viewing platforms are commonly used at festivals, such as music festivals, sporting events, such as horse racing, polo and golf, and corporate events. Temporary viewing platforms are generally used for short term events where a permanent structure is not desired.

[0003] Temporary viewing platforms are commonly constructed using conventional scaffolding to support a platform. Alternatively, scaffolding and platform structures may be provided which have been adapted for constructing a specific type of structure such as a tiered seating structure as described, for example, in FR2585752.

[0004] One problem with many such structures is that the supporting scaffolding forms a cross-linked supporting structure, or at least a dense field of vertical supporting legs, which cannot readily be walked through. As such, any temporary viewing platform constructed using these prior art arrangements provides a raised viewing platform at the expense of rendering useless the area underneath the viewing platform. Furthermore, such structures provide an obstacle to the flow of people at ground level which is problematic for events at which large crowds of people are present.

[0005] Another problem with some prior art arrangements stems from the fact that they are either adapted for one specific type or shape of structure or alternatively are not adapted for any particular type or shape of structure. The problem with systems which are not adapted for any particular type or shape of structure is that they are usually difficult and time consuming to construct into a desired structure. Conversely, the problem with systems which are specifically adapted for a particular type or shape of structure is that they do not provide much in the way of flexibility for providing different types and shapes of structure as desired. For example, for certain uses an elongate linear viewing platform may be desired, e.g. for a stage. For other uses a non-elongate viewing platform may be desired, e.g. to view out in all directions from a specific location. The required type or shape of final structure may also be determined by the space available and the contours of the land on which the temporary viewing platform is to be constructed.

[0006] Another problem with some arrangements is that they are adapted to be mounted to another structure such as a side of a building rather than being free-standing.

[0007] Yet another problem with some prior art arrangements is that they are not aesthetically pleasing, at least from certain angles. For example, supporting scaffolding is often visible from at least a rear side of a temporary viewing structure which is unsightly and undesirable, particularly at exclusive events.

[0008] Embodiments of the present invention aim to solve the aforementioned problems. In particular, it is an aim of certain embodiments of the present invention to provide a modular construction kit which is readily transportable, quick and easy to construct into a free-standing temporary viewing platform, and easy to take apart thereafter for further transport and re-use. It is a further aim to provide a modular construction kit which is adapted to construct a specific range of types and shapes of free-standing temporary viewing platform, and to provide free-standing temporary viewing platforms which can be readily walked under by people at ground level and which are aesthetically pleasing from all angles.

SUMMARY OF THE INVENTION

[0009] Having identified the previously described problems associated with various prior art arrangements for temporary viewing platforms, the present applicant has developed a modular construction kit which solves all these problems.

[0010] According to a first aspect of the present invention there is provided a modular construction kit adapted to construct both a hexagonal and an elongate linear shaped horizontal free-standing temporary viewing platform and combinations thereof, the modular construction kit comprising a plurality of components adapted to be attachable and detachable from each other whereby the temporary viewing platform can be readily constructed and taken apart, the plurality of components comprising:

[0011] a plurality of support legs, each support leg being at least six feet (1.829 meters) long;

[0012] a plurality of floor plates, comprising at least six floor plates having an equilateral triangular shape or an isosceles trapezoid shape;

[0013] a plurality of handrail elements adapted to be mounted around a circumference of the temporary viewing platform for preventing a user from falling over an edge of the temporary viewing platform; and

[0014] at least one stair frame adapted to be mounted to the temporary viewing platform whereby a user can climb the stair frame to access the temporary viewing platform.

[0015] The aforementioned modular construction kit is not only capable of but indeed specifically adapted to produce a particular range of types and shapes of free-standing temporary viewing platform, specifically hexagonal and elongate linear shaped horizontal free-standing viewing platforms and combinations thereof such as an elongate linear platform with hexagonal viewing platforms at either end thereof.

[0016] By providing a modular construction kit which is adapted to form a specific range of types and shapes of free-standing temporary viewing platform, the modular kit is more readily constructed than, for example, systems which are not adapted for any particular type or shape of structure. Furthermore, the hexagonal and linear structures provided by the modular construction kit allows a degree of flexibility that is absent from systems which are specifically adapted for one particular type or shape of structure.

[0017] An essential feature of the present invention in order to provide this specific adaptability is the provision of floor plates which have an equilateral triangular shape and/or an isosceles trapezoid shape. Such floor plates are ideally adapted for constructing both hexagonal and linear shaped viewing platforms.

[0018] According to one arrangement, at least six floor plates having an equilateral triangular shape are required to form a hexagonal shaped viewing platform. However, providing only six floor plates having an equilateral triangular shape requires that the floor plates are relatively large to form a hexagonal shaped viewing platform of sufficient size. A larger number of smaller triangular floor plates can be advan-

tageous because it allows for narrow elongate viewing platforms to be readily constructed using the same elements. Furthermore, the smaller elements are easier to handle during construction and more readily transportable.

[0019] Thus, according to one embodiment at least twenty four floor plates having an equilateral triangular shape are provided to form a hexagonal shaped viewing platform, six forming a central hexagonal structure with the remaining eighteen disposed around the central hexagonal structure in an alternating orientation to form a larger hexagonal structure for the hexagonal viewing platform.

[0020] One problem with this arrangement is that a relatively large number of floor plates are required and all these floor plates must be arranged and supported to form the viewing platform which can be relatively time consuming.

[0021] Accordingly, in one particular advantageous embodiment the eighteen triangular floor plates disposed around the central hexagonal structure can be replaced with six isosceles trapezoids. Each isosceles trapezoid has a base twice as long as its top with sides of equal length, the sides also being equal in length to the top of the trapezoid. As such, each isosceles trapezoid has an area three times the area of each central equilateral triangular floor plate. Thus the number of floor plates required for a hexagonal viewing platform is reduced from twenty four to twelve. According to this embodiment the modular construction kit comprises at least six equilateral triangular floor plates and at least six isosceles trapezoid floor plates. This has been found to be a good compromise between the required size for the floor plates and the required number of floor plates to construct viewing platforms having a suitable size. The trapezoid floor plates have also been found to be useful in forming long thin platforms such as walkways without requiring as many joints as with their triangular shaped counterparts.

[0022] Yet another option to further reduce the number of floor plates is to replace the six central triangular floor plates with a single hexagonal central floor plate. According to this embodiment the modular construction kit may comprise at least one hexagonal floor plate and at least six isosceles trapezoid floor plates. The hexagonal floor plate should have a side length equal to the top of each isosceles trapezoid. Alternatively, the central hexagonal floor plate may be surrounded by eighteen triangular floor plates in order to construct a hexagonal viewing platform.

[0023] Yet another option is to use two isosceles trapezoid floor plates to form the central hexagonal structure with six further isosceles trapezoid floor plates disposed around the central hexagonal structure. According to this embodiment the modular construction kit may comprise at least eight isosceles trapezoid floor plates.

[0024] According to certain embodiments, the modular construction kit further comprises a plurality of floor frame elements which are adapted to be coupled to an upper portion of the support legs in order to form a floor frame which is hexagonal or linear in shape, the floor frame elements being adapted to receive the floor plates when constructed into a hexagonal or linear shape in order to form hexagonal and elongate linear shaped horizontal free-standing viewing platforms and combinations thereof. The plurality of handrail elements may be adapted to be mounted to the floor frame elements around a circumference of the floor frame for preventing a user from falling over an edge of the temporary viewing platform. The at least one stair frame may be adapted to be mounted to the floor frame whereby a user can climb the stair frame to access the temporary viewing platform.

[0025] According to other embodiments the plurality of floor frame elements are not required. In this case, the floor plates must be adapted to be coupled to each other in order to form a floor structure which is self supporting such that a further supporting floor frame structure is not needed. For example, the floor plates may be adapted so as to be attachable to each other using nuts and bolts, snap-fit type connections, or complementary male and female type connections. While such arrangements increase the complexity of the floor plates themselves, eliminating the need for the floor frame elements reduces the overall number of components required for the modular construction kit. Further still, the weight of the floor structure is reduced.

[0026] In the aforementioned arrangements in which no floor frame elements are required, the floor plates may be further adapted to receive the plurality of handrail elements around a circumference of the floor structure for preventing a user from falling over an edge of the temporary viewing platform. One or more of the floor plates may also be adapted to receive a stair frame whereby a user can climb the stair frame to access the temporary viewing platform.

[0027] The modular construction kit is also specifically adapted to provide a temporary free-standing viewing platform which can be readily walked under by members of the public. As such, they do not provide an obstacle to the flow of people at ground level which would otherwise be problematic for events at which large crowds of people are present. Alternatively, the space underneath the temporary free-standing viewing platform may be used, for example, as a bar or the like.

[0028] An essential feature of the present invention in order to ensure that the temporary viewing platform can be readily walked under by members of the public is the provision of support legs at least 6 feet (1.829 meters) long which can be orientated in a vertical direction for supporting a raised hexagonal or linear platform comprising floor frame elements with triangular floor plates mounted thereto. More preferably, the support legs are at least 7, 8 or 9 feet (2.134, 2.438 or 2.743 meters) long. The support legs may be extendable to at least 6, 7, 8 or 9 feet (1.829, 2.134, 2.438 or 2.743 meters) in length. For example, the support legs may be telescopic. Such telescopic support legs may be adapted to be extendable and fixed at a number of different lengths according to a desired use.

[0029] The support legs and the floor frame and/or floor plates must be strong enough such that the platform can be supported with a relative small number of support legs. A dense field of vertical supporting legs must be avoided as this would render the space underneath the platform relatively useless and provide an obstacle to the flow of people at ground level. For example, according to one preferred arrangement a hexagonal viewing platform is provided with seven support legs, one at each point of the hexagon and one in the centre of the hexagon. Preferably the support legs are at least 6 feet (1.829 meters) apart to allow people to walk under the temporary viewing platform without being unduly impeded by the support legs.

[0030] The free-standing temporary viewing platforms of the present invention are more aesthetically pleasing than previous arrangements using, for example, conventional scaffolding or the like. The pleasing aesthetic quality of the present invention is achieved by providing the combination of features described previously. The triangular, trapezoid, hex-

agonal, and linear shaped structural components of the platforms in combination with a relatively disperse supporting structure has been found to be particularly aesthetically pleasing.

[0031] Embodiments of the present invention can be used to create a wide variety of different temporary viewing platform structures comprising hexagonal decks, elongate linear stages, and combinations thereof. This is advantageous when compared with prior art systems which are not adapted to produce any specific type/shape of structure or are adapted to form a single structure or variants of the single structure such as a shorter or longer stage of the same shape. The components of the present modular construction kit are adapted to be readily attached and taken apart in order to allow easy construction and transportation which is required for such temporary structures as opposed to more permanent building structures. For example, the components may be adapted so as to be attachable using nuts and bolts, snap-fit type connections, or complementary male and female type connections rather than using, for example, nails, screws, welds, adhesive or cement as in more permanent constructions.

[0032] If present, the floor frame elements are preferably elongate elements with a plurality of joining points along their length such that the elements can be joined in an array of different combinations of hexagonal and linear shaped platform configurations. The floor frame elements may also comprise one or more holes therethrough in order to provide elements which are lighter in weight for ease of construction and support on the support legs. An elongate beam having a number of openings therein with cross connections in order to strengthen the beam provides an ideal floor frame element which is both light and strong and which can form a floor frame structure which can be supported by a relatively small number of support legs. Each of the floor frame elements is preferably a beam having a length which is a multiple n of the length of the sides of the equilateral triangular floor plates, n being an integer greater than or equal to 1. The plurality of floor frame elements may comprise a first set of beams comprising at least twelve beams of equal length for constructing a hexagonal floor frame comprising six side beams and six radial beams. The plurality of floor frame elements may further comprise a second set of beams comprising at least six beams of equal length which are shorter than the beams of the first set for constructing a hexagonal ring of cross beams within the hexagonal floor frame. The beams of the second set are preferably shorter than the beams of the first set by an amount equal to the length of the sides of the equilateral triangular floor plates. The plurality of floor frame elements may also comprise a third set of beams comprising at least six beams of equal length which are shorter than the beams of the second set for constructing a hexagonal ring of cross beams within the hexagonal floor frame. The third set of beams is preferably shorter than the second set of beams by an amount equal to the length of the sides of the equilateral triangular floor plates. Each of the beams may comprise a raised ridge extending along a centre of an upper side thereof for receiving and aligning the equilateral triangular floor plates. According to one preferred arrangement the beams have an I-shaped cross-section.

[0033] Components of the modular construction kit may be made of metal, wood, carbon fibre, glass fibre or any combination thereof. Metallic components may be made of steel, iron, or aluminium. If metal components are used, aluminium is preferred due to its strength and light weight although this material is more expensive than steel or iron. As such, for certain low cost products, steel or iron may be preferred.

[0034] A particular preferred material for components of the present modular construction kit is a composite comprising a mixture of carbon and glass fibre. This material has been found to be strong enough for the present invention whilst also being very low weight (lower weight than aluminium). At the same time, it has been found that it is cheaper to manufacture the components of the present modular construction kit using such a composite material rather than, for example, aluminium. The present applicant has found that techniques used for constructing boats using carbon and glass fibre composites can readily be utilized for constructing the components of the present modular construction kit. These techniques can be used for manufacturing any or all of the major components of the construction kit. For example, one particularly preferred technique for the support legs is to form them of a carbon and glass fibre composite in which the fibres are wound to increase the strength of the legs.

[0035] According to another aspect of the present invention the previously described modular construction kit is used to construct a free-standing temporary viewing platform comprising a hexagonal viewing platform, an elongate linear viewing platform, or a combination thereof.

[0036] According to another aspect of the present invention there is provided a free-standing temporary viewing platform constructed using the previously described modular construction kit and comprising a hexagonal viewing platform, an elongate linear viewing platform, or a combination thereof.

[0037] According to yet another aspect of the present invention there is provided a connector for the previously described modular construction kit, the connector comprising two complementary parts: a first part comprising a plate having a protrusion extending from a side thereof and a hole disposed over, and spaced apart from, the protrusion; and a second part comprising a plate having a complementary hook for engaging the protrusion of the first part and a hole disposed over, and spaced apart from, the hook, whereby when the hook is engaged with the protrusion it forms a rotatable linkage which can be rotated to align the holes in the first and second parts such that a pin can be inserted through the first and second parts to couple the first and second parts in a fixed orientation.

[0038] In accordance with one embodiment of the connector, the first part comprises six plates extending radially outwards from a central connection at 60° angles. Such a connector may be disposed at the centre of a hexagonal viewing platform for connecting radial beams of the floor frame. The central connection may be formed by a central support leg or may be mounted to a central support leg.

[0039] According to yet another aspect of the present invention there is provided a twisted, or so called trapezoidal spiral, staircase. The staircase comprises opposing straight side panels which are evenly spaced apart with a plurality of steps disposed therebetween. The straight side panels are inclined at different angles relative to each other such that the staircase has a twisted, or so called trapezoidal spiral, arrangement which differs from both the standard straight staircase, in which the side panels are inclined at the same angle, and the standard curved spiral staircase, in which the side panels are curved. The twisted, trapezoidal spiral, staircase arrangement has been found to be advantageous over standard straight or curved spiral staircases. The trapezoidal spiral stair fits into a viewing platforms natural shape and

forms a simple spiral design which can be incorporated inside the viewing platform structure. Furthermore, the trapezoid stair design strengthens the viewing platform structure. The trapezoid stair design also provides a more open structure when compared to, for example, a standard curved spiral staircase, to allow better crowd flow around and under the structure.

BRIEF DESCRIPTION OF THE DRAWINGS

[0040] The present invention will now be described in further detail by way of example only, with reference to the accompanying drawings in which:

[0041] FIGS. **1** to **8** show various free-standing temporary viewing platforms in accordance with embodiments of the present invention;

[0042] FIGS. **9** to **15** show technical drawings illustrating various components of a modular construction kit in accordance with an embodiment of the present invention;

[0043] FIGS. **16** to **18** show schematic drawings of a connector for connecting components of the modular construction kit;

[0044] FIG. **19** shows the method steps involved in constructing a hexagonal free-standing temporary viewing platform in accordance with an embodiment of the present invention;

[0045] FIGS. **20** to **22** show various views of a triangular steps construction for accessing a hexagonal free-standing temporary viewing platform in accordance with an embodiment of the present invention;

[0046] FIG. **23** shows an alternative embodiment of a free-standing temporary viewing platform in which both triangular and trapezoid floor plates are utilized and no floor frame elements are required;

[0047] FIG. **24** shows technical drawings illustrating various components of a modular construction kit for constructing the free-standing temporary viewing platform shown in FIG. **23**;

[0048] FIGS. **25** to **29** show various views of a twisted, or so called trapezoidal spiral, staircase arrangement according to another aspect of the present invention; and

[0049] FIG. **30** shows an embodiment of a free-standing temporary viewing platform in which both straight and trapezoidal spiral staircases are disposed.

DETAILED DESCRIPTION OF PREFERRED EMBODIMENTS

[0050] FIGS. **1** to **22** show embodiments comprising triangular floor plates and floor frame elements for supporting the floor plates.

[0051] FIG. **1** shows a hexagonal free-standing temporary viewing platform in accordance with an embodiment of the present invention. The two people illustrated in FIG. **1** are approximately 6 feet (1.829 meters) high and thus it is evident that the viewing platform is approximately 8 to 9 feet (2.438 to 2.743 meters) in height in order to ensure people can readily walk beneath the viewing platform.

[0052] FIG. **2** shows the same hexagonal free-standing temporary viewing platform as illustrated in FIG. **1** but with an ornate covering made of fabric or plastic material. The covering functions to protect viewers from rain and/or sunshine and/or for providing surfaces on which advertisements and the like can be disposed. The covering is removably attachable to the viewing platform such that different coverings can be used according to a desired use. Attachment points for the covering can be provided on the hand rail elements, the support legs, and/or the stair frame.

[0053] FIG. **3** shows another embodiment of the present invention comprising two hexagonal type viewing platforms joined together.

[0054] FIG. **4** shows yet another embodiment comprising three hexagonal type viewing platforms joined together. Also illustrated in this embodiment is an opening provided in the viewing platform for accommodating an obstruction, in this case a tree. The opening is provided simple by building the floor frame around the obstruction and not covering a portion of the floor frame with triangular floor plates.

[0055] FIG. **5** shows a multi-level arrangement in which the viewing platform has been expanded in both the vertical and horizontal directions. In this case, a first hexagonal viewing platform has a second hexagonal viewing platform attached to a side thereof in a horizontal direction and a third hexagonal viewing platform mounted thereover in a vertical direction.

[0056] FIG. **6** illustrates a further multi-level arrangement forming a pagoda-like structure. Such pagoda-like structures may be provided to reflect an oriental sponsor or theme.

[0057] FIG. **7** shows various single level viewing platform arrangements which may be constructed using the modular construction kit of the present invention. FIG. **8** shows various multi-level viewing platform arrangements which may be constructed using the modular construction kit of the present invention.

[0058] FIGS. **9** to **15** show technical drawings illustrating the individual components of a modular construction kit in accordance with an embodiment of the present invention and how these components are connected together in order to form a temporary viewing platform. It will be understood that the detailed configuration of the individual components and connections may take various forms. However, there are some generally preferred structural configurations for the components which may be applicable to a number of different embodiments. For example, the floor frame of a hexagonal viewing platform preferably comprises radial beams extending from a central point of the hexagonal structure and cross beams extending between the radial beams as illustrated in FIG. **9**. The radial beams are preferably attachable to an upper portion of a central support leg. The cross beams between the radial beams function to strengthen the floor frame structure and also provide mounting points for mounting the triangular floor plates thereon. Preferably, the cross beams also form a hexagonal shaped ring structure. In the embodiment illustrated in FIG. **9**, it can be seen there are two inner hexagonal shaped rings of cross beams in addition to the beams forming the outer edge of the hexagonal platform. For ease of construction, it is preferred that the triangular floor plates are smaller in size than the six triangular shaped areas defined by the radial beams of the floor frame. For example, in the embodiment illustrated in the technical drawings, nine floor plates are provided for each of the six triangular areas defined by the radial beams of the floor frame. This number and size of floor plates is complementary with the number and position of the cross beams for mounting the floor plates thereon. In particular, the distance between parallel cross beams is substantially equal to the height of the triangular floor plates such that rows of triangular floor plates can be mounted between each set of parallel cross beams. Of course, six larger triangular floor plates could be provided in order to cover the

entire hexagonal platform illustrated in FIG. **9**. However, providing smaller triangular floor plates as illustrated in FIG. **9** can be advantageous because it allows for narrow elongate viewing platforms to be readily constructed using the same elements. Furthermore, the smaller elements are easier to handle during construction and more readily transportable. Alternatively, or additionally, in order to make the triangular floor plates lighter they may be made of a meshed structure rather than a solid plate. The triangular floor plates may be made of a combination of materials such as a metallic (e.g. aluminium) supporting structure, a triangular plastic and/or wood floor piece, and optionally a fine wood finish thereover to make the floor look ascetically pleasing.

[0059] FIGS. **16** to **18** show schematic drawings of a connector for connecting components of the modular construction kit. The connector comprises two complementary parts which fit together to form a connection. A first part comprises a plate having a protrusion extending from a side thereof and a hole disposed over, and spaced apart from, the protrusion. The second part comprises a plate having a complementary hook for engaging the protrusion of the first part and a hole disposed over, and spaced apart from, the hook. When the hook is engaged with the protrusion it forms a rotatable linkage which can be rotated to align the holes in the first and second parts such that a pin can be inserted through the first and second parts to couple the first and second parts in a fixed orientation.

[0060] The connector is advantageous because it allows components of the modular construction kit to be joined together initially in a flexible manner with the rotatable hook and protrusion connection. This initial rotatable connection aids in lifting the components when constructing the raised platform before fixing the connection by aligning the holes and pinning the two parts of the connector together in a fixed orientation.

[0061] The first part may comprise six plates extending radially outwards from a central connection at 60° angles as shown in the top right corner of FIG. **16**. Such a connector may be disposed at the centre of a hexagonal viewing platform for connecting radial beams of the floor frame as shown in the top right corner of FIG. **18**. The central connection may be formed by a central support leg or may be mounted to a central support leg.

[0062] Alternatively, the connector may comprise a T-shaped first part as shown more centrally in FIG. **16**. The back plate of this T-shaped part may be adapted for connection to a beam of the floor frame. For example, the back plate may be inserted within a side opening of a floor frame beam having an I-shaped cross-section as illustrated in FIG. **17** and the left hand side of FIG. **18**.

[0063] The modular construction kit preferably comprises both the aforementioned connector types. It will be understood that the protrusion and hook of the two connector parts may be interchanged between the two parts while still retaining the same functionality.

[0064] FIG. **19** shows the method steps involved in constructing a hexagonal free-standing temporary viewing platform in accordance with an embodiment of the present invention.

[0065] Finally, FIGS. **20** to **22** show various views of a triangular steps construction for accessing a hexagonal free-standing temporary viewing platform in accordance with an embodiment of the present invention. As can be seen from the Figures, the steps comprise three sets (flights) of stairs arranged at approximately 60° angles relative to each other such that the stairs have an approximately triangular shape when viewed from above. This triangular arrangement for the stairs follows the triangular theme of the floor plates and is aesthetically pleasing. In addition, it provides a compact arrangement and may provide intermediate view sites between each flight of stairs.

[0066] FIG. **23** shows an alternative embodiment of a free-standing temporary viewing platform in which both triangular and trapezoid floor plates are utilized and no floor frame elements are required. In this case, the floor plates are adapted to be coupled to each other in order to form a floor structure which is self supporting such that a further supporting floor frame structure is not needed. The floor structure comprises six equilateral triangular floor plates forming a central hexagonal portion which is surrounded by six floor plates having an isosceles trapezoidal shape.

[0067] FIG. **24** shows technical drawings illustrating various components of a modular construction kit for constructing the free-standing temporary viewing platform shown in FIG. **23**.

[0068] FIGS. **25** to **29** show various views of a twisted, or so called trapezoidal spiral, staircase arrangement according to another aspect of the present invention while FIG. **30** shows an embodiment of a free-standing temporary viewing platform in which both straight and trapezoidal spiral staircases are disposed.

[0069] While this invention has been particularly shown and described with reference to preferred embodiments thereof, it will be understood by those skilled in the art that various changes in form and details may be made therein without departing from the scope of the invention as defined by the appended claims.

1. A modular construction kit adapted to construct both a hexagonal and an elongate linear shaped horizontal free-standing temporary viewing platform and combinations thereof, the modular construction kit comprising a plurality of components adapted to be attachable and detachable from each other whereby the temporary viewing platform can be readily constructed and taken apart, the plurality of components comprising:

a plurality of support legs, each support leg being at least six feet (1.829 meters) long;

a plurality of floor plates, comprising at least six floor plates having an equilateral triangular shape or an isosceles trapezoid shape;

a plurality of handrail elements adapted to be mounted around a circumference of the temporary viewing platform for preventing a user from falling over an edge of the temporary viewing platform; and

at least one stair frame adapted to be mounted to the temporary viewing platform whereby a user can climb the stair frame to access the temporary viewing platform.

2. A modular construction kit according to claim **1**, wherein the plurality of floor plates comprises at least twenty four floor plates having an equilateral triangular shape.

3. A modular construction kit according to claim **1**, wherein the plurality of floor plates comprises at least six floor plates having an equilateral triangular shape and at least six floor plates having an isosceles trapezoid shape.

4. A modular construction kit according to claim **1**, wherein the plurality of floor plates comprises at least eight floor plates having an isosceles trapezoid shape.

5. A modular construction kit according to claim **1**, wherein the plurality of floor plates further comprises at least one floor plate having a hexagonal shape.

6. A modular construction kit according to claim **1**, further comprising a plurality of floor frame elements adapted to be coupled to an upper portion of the support legs, in order to form a floor frame which can be hexagonal or linear in shape, the floor frame elements being adapted to receive the floor plates when constructed into a floor frame and the plurality of handrail elements being adapted to be mounted to the floor frame elements around a circumference of the floor frame.

7. A modular construction kit according to claim **6**, wherein each of the floor frame elements is a beam having a length which is a multiple n of the length of a side of the floor plates, n being an integer greater than or equal to 1.

8. A modular construction kit according to claim **6**, wherein the plurality of floor frame elements comprises a first set of beams comprising at least twelve beams of equal length for constructing a hexagonal floor frame comprising six side beams and six radial beams.

9. A modular construction kit according to claim **8**, wherein the plurality of floor frame elements further comprises a second set of beams comprising at least six beams of equal length which are shorter than the beams of the first set for constructing a hexagonal ring of cross beams within the hexagonal floor frame.

10. A modular construction kit according to claim **9**, wherein the beams of the second set are shorter than the beams of the first set by an amount equal to the length of a side of the floor plates.

11. A modular construction kit according to claim **9**, wherein the plurality of floor frame elements further comprises a third set of beams comprising at least six beams of equal length which are shorter than the beams of the second set for constructing a hexagonal ring of cross beams within the hexagonal floor frame.

12. A modular construction kit according to claim **11**, wherein the third set of beams are shorter than the second set of beams by an amount equal to the length of the sides of the equilateral triangular floor plates.

13. A modular construction kit according to claim **6**, wherein each of the floor frame elements is a beam comprising a raised ridge extending along a centre of an upper side thereof for receiving and aligning the equilateral triangular floor plates.

14. A modular construction kit according to claim **6**, wherein each of the floor frame elements is a beam comprising a plurality of holes therethrough.

15. A modular construction kit according to claim **6**, wherein each of the floor frame elements is a beam having an I-shaped cross-section.

16. A modular construction kit according to claim **6**, wherein the plurality of floor frame elements comprise a plurality of elongate beams.

17. A modular construction kit according to claim **6**, further comprising a connector for connecting the plurality of floor frame elements in order to form the floor frame, the connector comprising two complementary parts: a first part comprising a plate having a protrusion extending from a side thereof and a hole disposed over, and spaced apart from, the protrusion; and a second part comprising a plate having a complementary hook for engaging the protrusion of the first part and a hole disposed over, and spaced apart from, the hook, whereby when the hook is engaged with the protrusion it forms a rotatable linkage which can be rotated to align the holes in the first and second parts such that a pin can be inserted through the first and second parts to couple the first and second parts in a fixed orientation.

18. A modular construction kit according to claim **17**, wherein the first or second part of the connector comprises six plates extending radially outwards from a central connection at 60° angles.

19. A modular construction kit according to claim **18**, wherein the first or second part of the connector comprises a back plate forming a T-shaped connector part.

20. A modular construction kit according to claim **1**, wherein the floor plates are adapted to be coupled to each other in order to form a floor structure which is self supporting whereby a further supporting floor frame structure is not needed.

21. A modular construction kit according to claim **20**, wherein the floor plates are adapted to be coupled to each other using nuts and bolts, snap-fit type connections, or complementary male and female type connections.

22. A modular construction kit according to claim **1** or **6**, wherein the support legs are at least 7, 8 or 9 feet (2.134, 2.438 or 2.743 meters) long.

23. A modular construction kit according to claim **1** or **6**, wherein the support legs are extendable to at least 6, 7, 8 or 9 feet (1.829, 2.134, 2.438 or 2.743 meters) in length.

24. A modular construction kit according to claim **1** or **6**, wherein at least some components of the modular construction kit are made of a composite comprising a mixture of carbon and glass fibre.

25. (canceled)

26. A free-standing temporary viewing platform constructed using the modular construction kit according to claims **1** or **6**, comprising a hexagonal viewing platform, an elongate linear viewing platform, or a combination thereof.

27. A free-standing temporary viewing platform according to claim **26**, wherein the support legs are spaced at least 6 feet apart.

* * * * *