Oct. 18, 1938. C. L. HOWSE ET AL 2,133,819

FLUID TREATING APPARATUS

Filed March 30, 1933 4 Sheets-Sheet 1

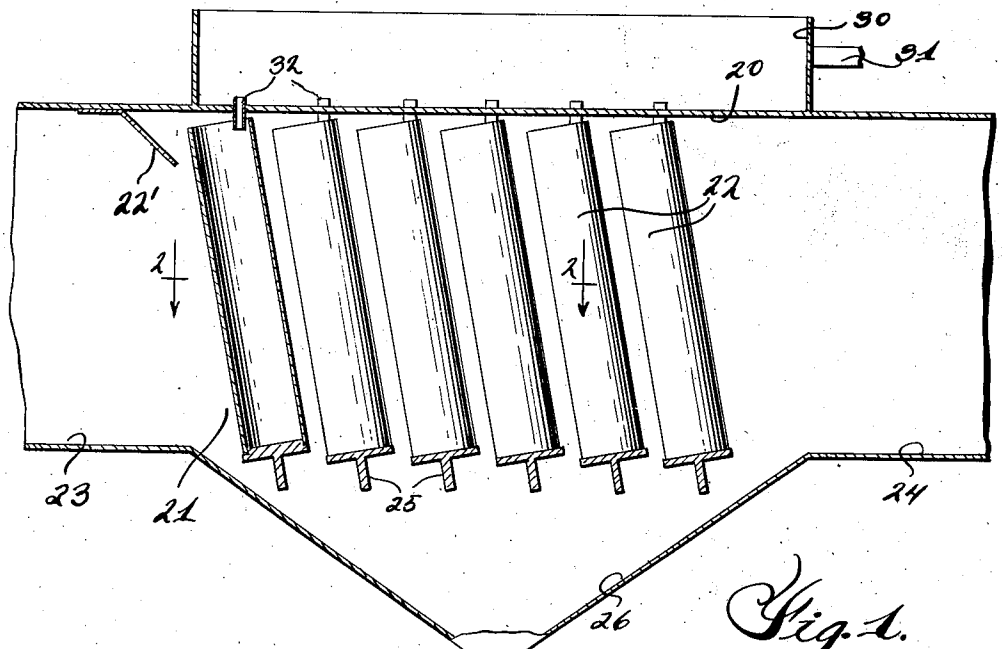

Fig. 1.

Fig. 3.

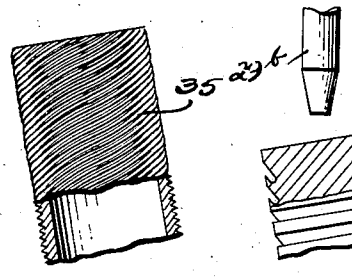

Fig. 2.

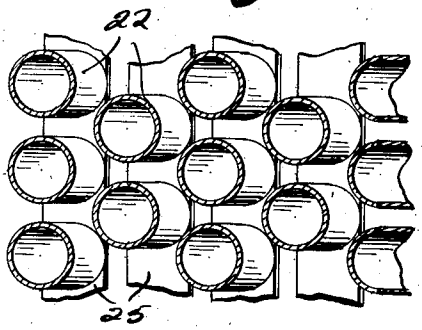

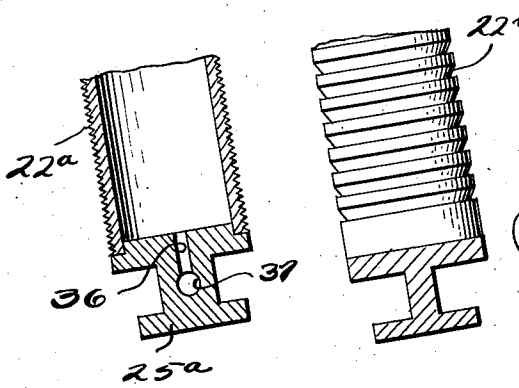

Fig. 4.

Inventors
Curtis L. Howse
Harry E. Brelsford
Samuel F. Cox
Willis P. Thomas

By White Hulbert White & Belknap
Attorneys

Oct. 18, 1938. C. L. HOWSE ET AL 2,133,819

FLUID TREATING APPARATUS

Filed March 30, 1933 4 Sheets-Sheet 2

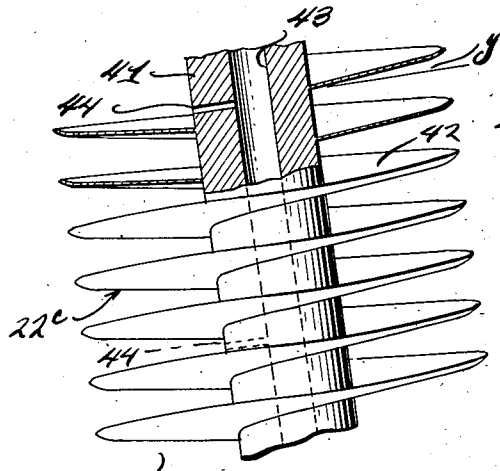

Fig. 5.

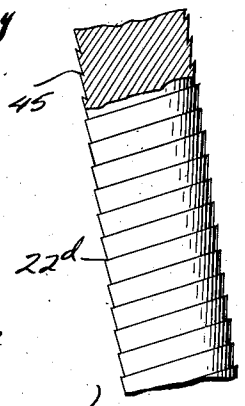

Fig. 6.

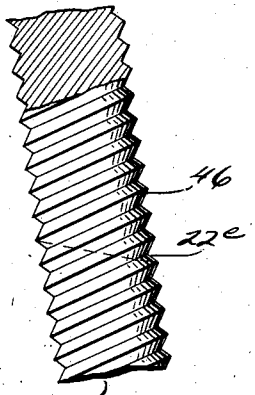

Fig. 7.

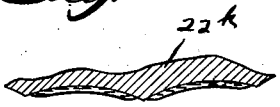

Fig. 13.

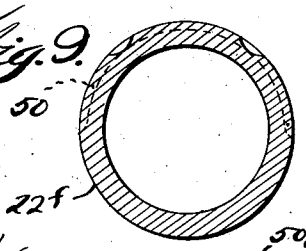

Fig. 9.

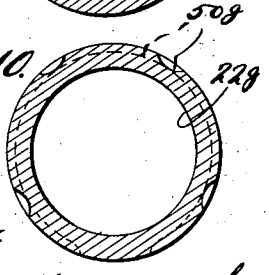

Fig. 10.

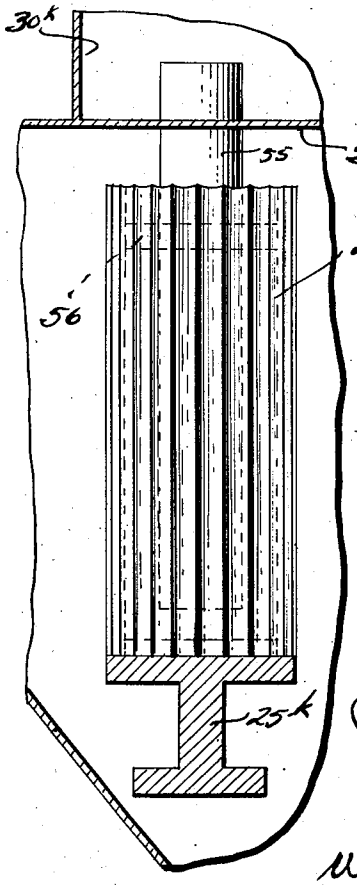

Fig. 12.

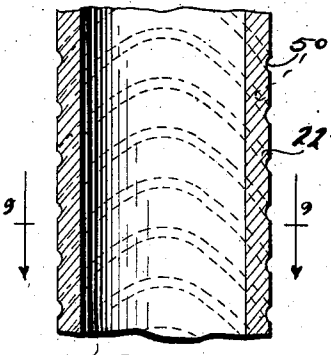

Fig. 8.

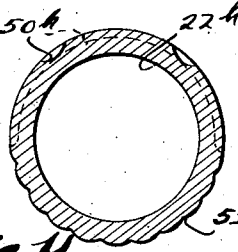

Fig. 11.

Inventors
Curtis L. Howse
Harry E. Brelsford
Samuel P. Cox
Willis P. Thomas

By Whittemore Hulbert & Whittemore Belknap Attorneys

Oct. 18, 1938. C. L. HOWSE ET AL 2,133,819

FLUID TREATING APPARATUS

Filed March 30, 1933 4 Sheets-Sheet 3

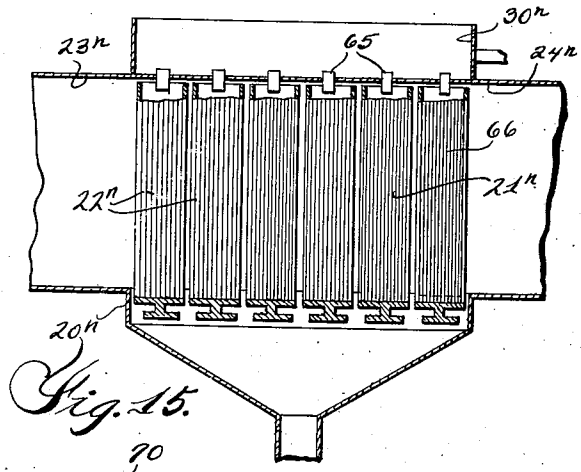

Fig. 15.

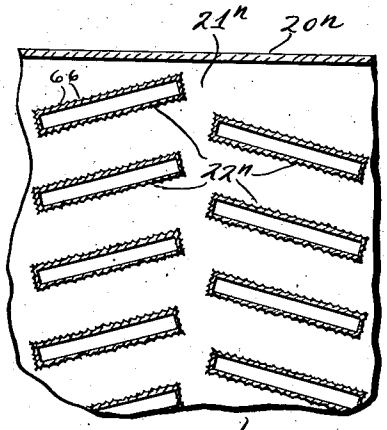

Fig. 16.

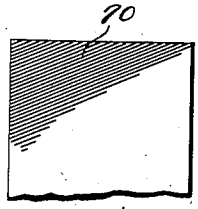

Fig. 17.

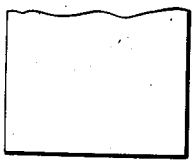

Fig. 18.

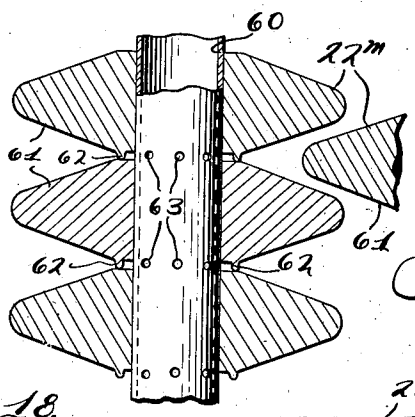

Fig. 14.

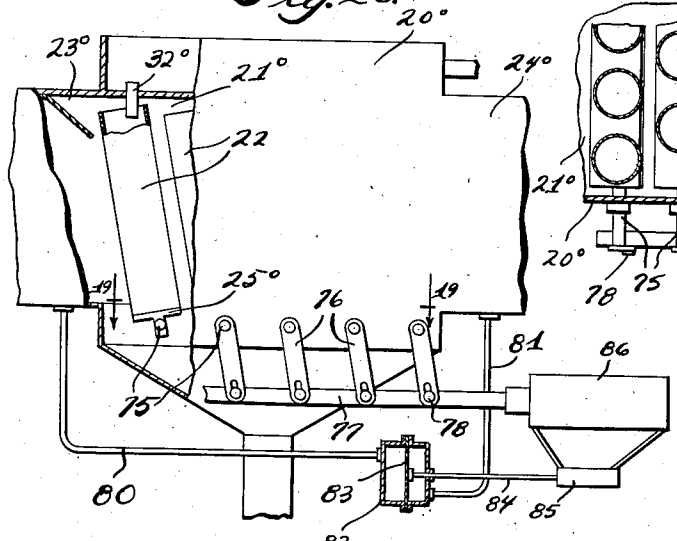

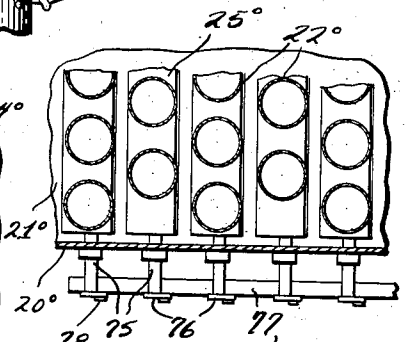

Fig. 19.

Inventors
Curtis L. Howse
Harry E. Brelsford
Samuel F. Cox
Willis P. Thomas

By Pattemore Hulbert & Pattemore & Belknap
Attorneys

Oct. 18, 1938. C. L. HOWSE ET AL 2,133,819

FLUID TREATING APPARATUS

Filed March 30, 1933 4 Sheets-Sheet 4

Fig. 20.

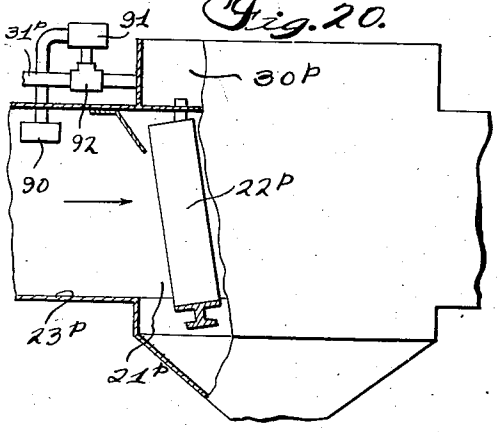

Fig. 21.

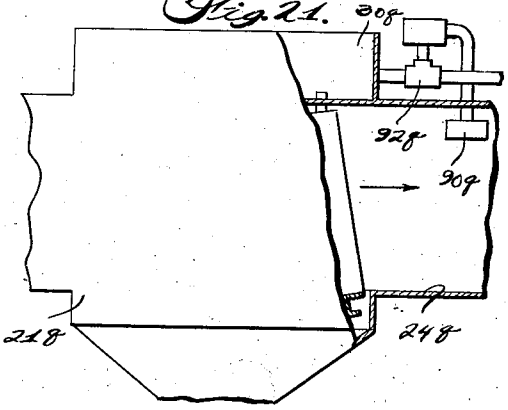

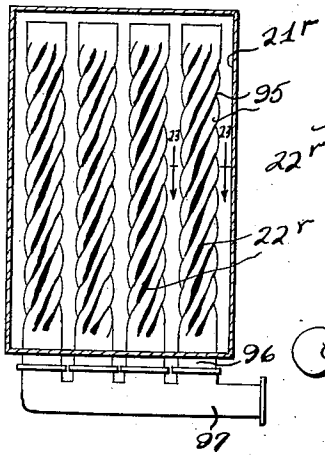

Fig. 22.

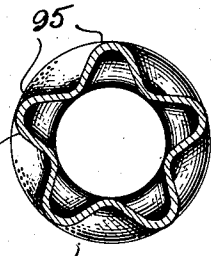

Fig. 23.

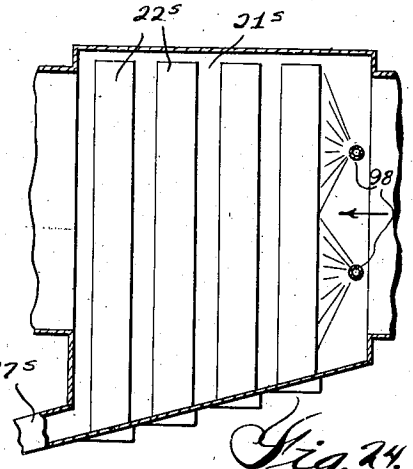

Fig. 24.

Fig. 26.

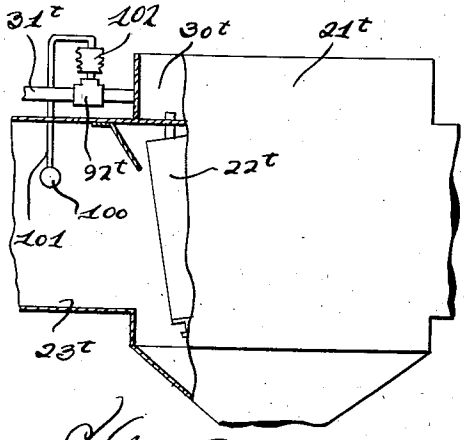

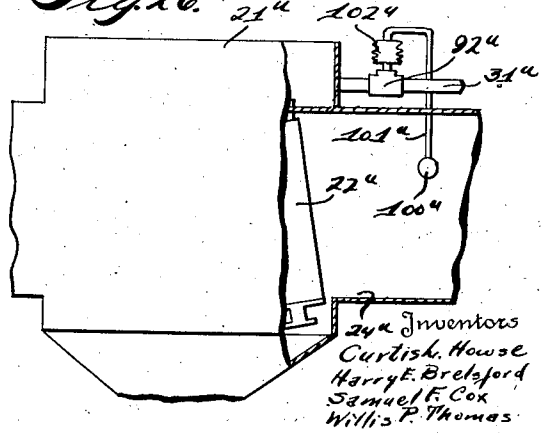

Fig. 25.

Inventors
Curtish. Howse
Harry F. Bredford
Samuel F. Cox
Willis P. Thomas

By
Whittemore Hulbert & Whittemore & Belknap
Attorneys

Patented Oct. 18, 1938 2,133,819

UNITED STATES PATENT OFFICE

2,133,819

FLUID TREATING APPARATUS

Curtis L. Howse, Detroit, Harry E. Brelsford, Birmingham, and Samuel F. Cox and Willis P. Thomas, Highland Park, Mich., assignors to Diamond Power Specialty Corporation, Detroit, Mich., a corporation of Michigan

Application March 30, 1933, Serial No. 663,608

22 Claims. (Cl. 261—112)

This invention relates to an apparatus for treating fluids such as air, dust laden gases and the like.

The invention is directed more particularly to an apparatus of the above mentioned character which provides means for effecting a contact between the fluid to be treated and a liquid and which includes elements disposed in the path of the fluid to be treated and means for moistening the surfaces of these elements.

One of the primary objects of this invention is to provide in an apparatus of the above mentioned character means for neutralizing the effect of the velocity of the fluid to be treated on the liquid flowing over the elements disposed in the path of the flow of the fluid. More particularly, the invention contemplates the provision of means for preventing the fluid flowing through the passage from blowing the liquid on the elements to the rear faces of the elements.

A further object of this invention is to provide in an apparatus of the above mentioned character, means for effecting an even distribution of the liquid over the surfaces of the elements disposed in the path of the fluid flow.

The invention further contemplates the provision of means for obtaining in a minimum space the maximum amount of moistened surface for contact by the fluid to be treated.

The invention further contemplates the provision in an apparatus of the above mentioned character of means for reducing to a minimum the amount of liquid necessary to keep the surfaces of the elements moistened to the desired degree.

Numerous other objects and advantages of this invention will become more apparent as the following description proceeds, particularly when reference is had to the accompanying drawings, wherein:

Fig. 1 is a semi-diagrammatic vertical sectional view through a gas treating apparatus constructed in accordance with the teachings of this invention;

Fig. 2 is a horizontal sectional view taken substantially on the line 2—2 of Fig. 1;

Fig. 3 is an enlarged semi-diagrammatic elevational view of a slightly modified form which the baffle element may assume;

Fig. 4 is a view similar to Fig. 3 and partly in section showing a further modified form of element;

Fig. 5 is a view similar to Fig. 3 and partly in section showing a further form of baffle element;

Fig. 6 is a view similar to Fig. 3 partly in section showing a further form of baffle element;

Fig. 7 is a view similar to Fig. 3 and partly in section showing a still further form of baffle element;

Fig. 8 is a rear elevational view in section of a further form of baffle element;

Fig. 9 is a sectional view taken substantially on the line 9—9 of Fig. 8;

Fig. 10 is a sectional view similar to Fig. 9 showing a further modified form of construction;

Fig. 11 is a view similar to Fig. 9 showing a still further modified form of construction;

Fig. 12 is a view similar to Fig. 1 showing a further modified form of baffle element;

Fig. 13 is a fragmentary horizontal sectional view through one of the elements shown in Fig. 12;

Fig. 14 is an enlarged sectional view through a further modified form of element;

Fig. 15 is a view similar to Fig. 1 showing a still further modified form of construction;

Fig. 16 is a horizontal sectional view through the structure shown in Fig. 15;

Fig. 17 is an enlarged elevational view of a slightly modified form of baffle element;

Fig. 18 is a semi-diagrammatic view similar to Fig. 1 but showing a mechanism for automatically adjusting the inclination of the baffle elements;

Fig. 19 is a fragmentary sectional view taken substantially on the line 19—19 of Fig. 18;

Fig. 20 is a view similar to Fig. 1 showing a control means for the supply of the wetting medium;

Fig. 21 is a view similar to Fig. 20 showing a slightly modified arrangement of parts;

Fig. 22 is a sectional view through a gas treating apparatus showing a further modified form of baffle element;

Fig. 23 is a fragmentary sectional view taken substantially on the line 23—23 of Fig. 22;

Fig. 24 is a view similar to Fig. 1 showing a further modified form of construction;

Fig. 25 is a view similar to Fig. 20 showing a modified form of control means for the supply of the wetting medium; and

Fig. 26 is a view similar to Fig. 25 showing a further modified arrangement of parts.

In its broader aspects the present invention is directed to a means for effecting a contact between a fluid and a liquid. The means for accomplishing this preferably comprises a casing in which a plurality of baffle elements are mounted together with means for moistening the surfaces of these elements by flowing a liquid over the same. The fluid to be treated enters one end

of the casing and is discharged from the other end thereof, having contacted with the moistened surfaces of the baffle elements during its passage through the casing. The fluid to be treated may be dust laden gases such as are discharged from boilers, industrial furnaces and the like, or may be air. If the fluid to be treated is a dust laden gas, the device functions as a deduster, the dust particles and the like in the gas being trapped in the liquid on the surfaces of the elements so that the gas is moistened and cleaned before it is discharged from the casing. If the fluid to be treated is air which is to be humidified, the air during its passage through the casing becomes moistened with the moisture on the baffle elements so that the air is discharged from the casing moistened to a desired degree with a suitable liquid such as water.

To facilitate the description of the invention, the word "gas" will be utilized to designate the fluid which is caused to flow through the casing to be cleaned and/or moistened. The term "gas", therefore, is to be construed as meaning air, furnace gases, or other fluids. Further, the term "liquid" will be used to designate the substance which is utilized to moisten the outer surfaces of the baffle elements. When the device is utilized as a deduster, this liquid will have suitable dust collecting characteristics, while if the device is to be utilized as a humidifier, this liquid will have suitable humidifying characteristics. Thus the term "liquid" is to be construed as meaning either a dust collecting liquid, a humidifying liquid, or any liquid which will serve the particular purposes desired when brought in contact with the gas to be treated. Still further, the term "moistening" is to be construed as meaning "wetting or the application of a liquid to any desired degree".

Heretofore, in apparatuses of the above described character, use has been made of baffle elements arranged in the path of the gas flow, means being provided for flowing a treating liquid downwardly over the outer surfaces of these baffle elements. In constructions of this character, difficulty has been encountered in obtaining an even distribution of the treating liquid over the surfaces of the baffle elements. One cause of this difficulty has been that the gas flowing through the casing in which the baffle elements are mounted has blown the liquid around to the rear faces of the baffle elements, with the result that the front faces of the elements, or in other words, the faces of the elements which the gas first contacts, have been relatively dry, while the rear faces of the elements have been relatively moist. Obviously, it is more desirable that the front faces be moistened than that the rear faces of the baffle elements be moistened, for the reason that the gas first contacts the front faces of the elements. The present invention contemplates the provision of means for insuring an even distribution of the liquid over the surfaces of the baffle elements and contemplates further the provision of means to compensate for the tendency of the gas to blow the liquid around to the rear faces of the baffle elements.

In the drawings wherein like reference characters designate corresponding parts throughout all views, several embodiments of the inventive idea are disclosed. In Figs. 1 and 2 there is disclosed a construction which comprises a casing 20, this casing providing a chamber 21 in which baffle elements designated generally by the reference character 22 are located. The casing is shown as being mounted in a flue designated by the reference characters 23 and 24. The portion 23 of the flue is connected to a furnace or source of supply of the gas to be treated, while the portion 24 is connected to a suitable stack or other discharge for the treated gases. It will be understood that the gases in the portion 23 of the flue will enter the chamber 21, be treated therein by contact with the wetted surfaces of the baffle elements 22 and will be discharged from the chamber by way of the portion 24 of the flue. While the baffle elements may be arranged within the chamber 21 in any desired manner, they are preferably, as illustrated in Fig. 2 of the drawings, staggered with reference to each other so that the gases passing through the chamber will contact fully with the elements. A guard 22' is preferably provided in the upper part of the chamber and in advance of the baffle elements to prevent the gas from passing over the tops of the elements.

The baffle elements 22 are supported on beams 25 which extend transversely of the chamber 21, these beams being so disposed that they support the baffle elements above a hopper-shaped chamber 26 formed in the lower part of the casing 20. A conduit 27 provides a discharge for the chamber 26, this conduit being provided with any suitable valve designated by the reference character 28.

For effecting a flow of the treating liquid over the outer surfaces of the baffle elements, the following structure may be provided. Disposed above the casing is a reservoir 30 which is supplied with a suitable liquid by a supply pipe 31. Passing through the top wall of the casing 20 and extending into the reservoir to receive liquid from the same are nozzles 32, these nozzles being arranged to discharge the liquid into the open tops of the baffle elements. The baffle elements are preferably hollow and are open at their tops and closed at their lower ends, with the result that the liquid discharged into the same will fill the baffle elements and will then overflow the open upper ends of the baffle elements so as to flow down the outer surfaces of the same.

To neutralize the effect of the gas velocity on the flow of the dust collecting liquid down the sides of the baffle elements, the baffle elements are inclined with reference to the vertical. It will be noted that the baffle elements are so inclined that the upper ends thereof lean toward the entrance portion 23 of the flue, or in other words, the baffle elements are inclined in a direction opposite to the direction of gas flow. This inclination of the baffle elements may be effected either by sloping the upper surfaces of the supporting beams 25 or by suitably mounting the supporting beams for rotative adjustment so that the baffle elements may be inclined to any desired angle. It will be understood that the nozzles 32 fit loosely within the open upper ends of the baffle elements so that some latitude in the angle of inclination of the baffle elements is afforded. Further, the guard 22' preferably extends downwardly sufficiently far to prevent the gases from passing over the tops of the baffle elements even when the latter are inclined to the greatest degree. If it is not desired to make the beams rotatively adjustable to thus vary the angle of inclination of the baffle elements, the elements are preferably fixed at an angle proportioned to the velocity of the gas flow, or if the velocity of the gas flow is variable, some intermediate angle may be selected.

With the elements inclined in this manner, it

will be apparent that gravity will tend to cause the liquid flowing down the outer surfaces of the elements to flow to the front faces thereof. The gas flowing through the chamber will, on the other hand, tend to blow the liquid to the rear faces of the baffle elements. The result will be that the liquid will be more evenly distributed over the surfaces of the baffle elements so that an efficient contact of the liquid with the gas to be treated will be obtained. The outer surface of the baffle elements may be smooth, if desired, and the elements may be made of any desired material, such as earthen material, either dense or porous, vitreous material, or any desired metallic material.

It will be understood that in operation, if the device is utilized as a humidifying device, the gas flowing through the casing will contact with the moistened surfaces of the baffle elements and will absorb some of the liquid thereon so that the gas will leave the chamber 21 properly humidified. If the device is used as a dedusting apparatus, the dust laden gases passing through the chamber will contact with the moistened surfaces of the baffle elements, and the liquid on the baffle elements will collect the dust particles, the dust laden liquid flowing downwardly into the hopper 26. From the hopper the dust laden liquid may be discharged by way of the conduit 27. The gases after the dust particles have been removed from the same will leave the chamber in a cleansed and moistened condition by way of the portion 24 of the flue.

In Fig. 3 a slightly modified form of construction is disclosed in which the baffle element 22^a is shown as being provided with a helical thread 35 cut in its outer surface. The treating liquid flows down the surface of the baffle element by way of the helical thread, and the baffle element is so inclined as to overcome the tendency for the wetting medium to flow around to the rear of the baffle element or to blow off the baffle element by reason of the gas velocity.

It will be apparent that with a right hand thread on the baffle element, the effect of the inclination of the element is to increase the slope of the thread on the one side of the element and decrease the slope with respect to the direction of gas flow on the other side of the element. Thus, the liquid flowing down toward the front of the baffle element is on the greater slope, while the liquid flowing in the direction of the gas flow or toward the rear of the baffle element is on the lesser slope. By properly inclining the baffle element, the effect of the velocity of the gas may be entirely compensated for.

Experiments have indicated that a baffle element such as that above described, if positioned vertically in the chamber 21, will lose considerable liquid due to the gas velocity blowing the liquid off of the element. Further, experiments have shown that the baffle element will have a greater amount of the liquid on its rear face than on its front face. If, however, the baffle element is inclined to the proper angle, no liquid whatever is blown off of the baffle element, and the distribution of the liquid on the front of the element is practically identical with that on the rear face thereof. Thus the inclination of the baffle elements provides for the even distribution of the liquid over the surfaces of the elements, thus reducing the quantity of treating liquid utilized and rendering the element more efficient as a contact device.

The inclination of the baffle elements has the further advantage of providing more moistened surface in a limited area, since in a given height, a greater area is provided by inclined elements than is provided by vertical elements of the same shape. Since the elements may be threaded with a minimum lead axially, manufacturing costs are decreased to a minimum and the element may be maintained in a clean condition with a small amount of liquid.

As in the first described form of construction, the baffle elements 22^a are preferably hollow. In this embodiment of the invention, however, liquid is supplied to the interiors of the elements by nozzles 36 which project into the baffle elements through sealed openings in the lower ends thereof. These nozzles may, as illustrated, be connected to suitable supply headers 37 associated with the beams 25^a in any desired manner.

It might be noted that by supplying the liquid to the lower ends of the elements, a more even temperature of the elements is maintained when the fluid to be treated is hot furnace gas. By supplying the cooler liquid to the inside part of the baffle element which is last reached by the liquid flowing over the outside of the baffle element, the latter is kept relatively cool, and losses by evaporation of the liquid are minimized.

In Fig. 4 of the drawings a further modified form of construction is disclosed as comprising a baffle element 22^b having grooves 40 formed in its outer surface. As illustrated, these grooves are relatively deep, and the baffle element is so inclined that the liquid will tend to flow in the grooves toward the front of the baffle element where it is most needed. In this embodiment the baffle element is shown as being solid, and there is disclosed a nozzle 29^b for discharging the liquid on to the upper end of the baffle element. It will be understood, however, that the baffle element may be hollow, if desired, and that the liquid may be supplied to the same either from above or below as desired.

In this embodiment of the invention, the grooves will function not only to aid in maintaining the liquid at the front of the baffle elements, but will function also to increase to a substantial extent the moistened surface available for contact with the gas. A periodic flushing of the baffle element will function to clean the grooves or troughs.

In Fig. 5 a further modified form of construction is disclosed in which the baffle element 22^c is shown as comprising a center shaft 41 and means providing a spiral path 42 of substantial width around the surface of the shaft or core 41. This spiral path is designed to conduct liquid slowly from the top of the baffle element to the bottom and to present a large amount of moistened surface. It will be obvious that the radial extent of the spiral as well as the longitudinal travel of the spiral for each 360° thereof can be varied to suit conditions. The baffle element is preferably arranged so that the top thereof is inclined toward the gas flow to neutralize the effect of the gas velocity on the liquid in the helical trough. The means forming the spiral trough is preferably so arranged as to provide a small angle designated by the reference character Y to balance the effect of centrifugal force and to thus provide for a more even distribution of the liquid.

The liquid may be supplied to the helical trough in any desired manner. In the embodiment shown, the core 41 is provided with a central passage 43 which may be supplied with liquid either from the top or the bottom thereof in any desired

manner (not shown). The core is provided at spaced points with radially extending bores 44 which communicate with the central bore 43 and which provide means for feeding the liquid to the spiral trough at spaced points throughout the length thereof. By thus feeding the liquid to the trough at spaced points, the liquid is prevented from becoming too thick or heavy because of the dust collected by the same. While the means forming the helical trough is shown as being in the nature of a spiral fin integral with the core 41, it will be apparent that this trough might be formed by a plurality of separate helical rings. As in the previously described form of construction, the element may be made of metal or ceramic material, or other suitable substance.

In Figs. 6 and 7 further forms which the grooves may assume are illustrated. In Fig. 6 there is disclosed an element 22^d having a spiral thread 45 on the outer surface thereof. In Fig. 7 there is disclosed a construction in which the baffle element 22^e has a multiple thread 46 on its outer surface. In each instance the liquid may be caused to travel downwardly over the outer surface of the element, the threads or grooves providing not only an increased moistened surface, but providing also a means for slowly conducting the liquid downwardly throughout the length of the baffle elements.

In Figs. 8 and 9 a further modified form of construction is disclosed in which the rear face of the baffle element 22^f is provided with grooves 50, these grooves inclining from a high midpoint in substantially the center of the rear of the baffle element downwardly toward the front face of the element. The front face of the element may be smooth, as clearly illustrated in Fig. 9 of the drawings.

With the construction disclosed in these figures, it will be apparent that the liquid flowing down the exterior surface of the element will be conducted to the front side or face of the element to replace the liquid which is blown to the rear face of the element by the gas flowing through the chamber in which the elements are mounted. The elements may, as illustrated, be hollow and the dust collecting liquid fed to the same in any desired manner (not shown).

In Fig. 10 there is disclosed a construction quite similar to that shown in Figs. 8 and 9, in which construction, however, the grooves 50^g are carried almost entirely around the elements 22^g. With the grooves extended in the manner disclosed in this figure, it will be apparent that only a small area of the front face of the baffle element is smooth.

In Fig. 11 the baffle element 22^h is shown as being provided with the grooves 50^h which tend to return the liquid to the front face of the element. In this construction, however, the front face of the element is fluted or corrugated, as indicated by the reference character 51, so as to make the liquid cling more tenaciously to this face of the element.

In each of the several forms of construction just described, it will be apparent that the slope or inclination of the grooves which carry the wetting medium from the rear to the front face of the element may be made any angle desired. The angle of slope of the grooves will preferably be proportioned to the velocity of the gases impringing against the face of the baffle element. These constructions provide for a self-restoring distribution of the wetting medium over the surfaces of the baffle elements to uniformly maintain the moistened condition on the surfaces of the elements and to thus keep the elements efficient as liquid contact devices.

In Figs. 12 and 13 there is disclosed a modified form of construction in which baffle elements 22^k are shown as being mounted in a casing 20^k. In this modified form of construction, each baffle element is preferably supported in a vertical position by a suitable beam 25^k, it being understood that the baffle elements will be so arranged that the gas flowing through the casing will contact the baffle elements.

In this modified form of construction the baffle elements are hollow, and a pipe 55 is disposed centrally of each baffle element. Each pipe extends within its respective element to a point adjacent the lower end thereof, and each pipe is supported within its element adjacent the upper end thereof by a spider 56. The pipes all extend upwardly into a reservoir 30^k, so that the liquid in this reservoir may flow downwardly into the baffle elements. It will be apparent that the liquid will circulate downwardly through each tube 55, out the lower end of this tube, and then upwardly between this tube and the inner surface of the element, then overflowing the top of the element.

In this form of construction the outer surface of the element is shown as being fluted or corrugated, and the open top of the element is also preferably fluted or notched to facilitate the flow of the wetting medium from the interior of the element over the top edge of the same and down the corrugations on the outer surface of the element. Normally, the wetting medium would flow in a narrow stream down the center of each corrugation on the baffle element, but under the influence of the moving gas stream, the water in each corrugation is spread out into a thin film in the manner clearly illustrated in Fig. 13. The width of the corrugations is proportioned to the velocity of the gas stream, and the corrugations may be either uniformly spaced or may be wider on the rear face of the baffle element than on the front face thereof.

With this construction it will be apparent that the gas passing around the baffle element will not wipe or blow the liquid off of the surface of the element. Further, it will be apparent that with the element surface corrugated or fluted in the manner disclosed, a greater dust collecting surface will be obtained. Still further, the corrugations on the surface of the element are of considerable assistance in disturbing the gas going over the surface of the element creating a turbulence which causes the dust particles held by the gas to come into contact with the wetted surfaces on the element.

In Fig. 14 there is disclosed a baffle element 22^m which comprises a central tube 60 upon which are threaded circular spools or the like 61. The spools are spaced apart in any desired manner, as for example, by the projections 62, and the tube 60 is provided with openings 63 by which a treating liquid from the interior of the tube may be discharged into the space between the spools. The arrangement is such that a liquid supplied to the interior of tube 60 in any desired manner will be discharged in a thin film between the spools to flow outwardly over the surfaces thereof.

The spool pieces may be made of any desired material such as earthen material, either dense or porous, a vitreous glazed material, metal, or any particular substance desired. A baffle ele-

ment formed in this manner will present a substantial moistened surface within a limited space. A baffle element thus formed will also be rugged in construction since the spools forming the major part thereof are small units which may be readily removed. If desired, adjacent elements may be so arranged that the major axes of the spools are offset with respect to each other, as indicated in the drawings.

In Figs. 15 and 16 a further modified form of construction is disclosed as comprising a casing 20^n arranged in a flue 23^n and 24^n, this casing providing a chamber 21^n in which the baffle elements 22^n are located. These baffle elements are in the form of plates, and they are arranged in staggered relation and at an inclination to the direction of the gas flow, as clearly illustrated in Fig. 16 of the drawings. The angle of inclination may be any angle desired, dependent upon the velocity of the gas.

The baffle elements are preferably hollow, and nozzles 65 are provided for discharging a liquid from the reservoir 30^n into the interiors of the elements. This liquid will fill the elements, and overflowing the tops thereof, will flow down the surfaces of the elements in the vertical grooves 66 formed thereon. The arrangement is such that the outer surfaces of the baffle elements will be entirely moistened so that they will act efficiently as liquid contact elements.

In Fig. 17 there is disclosed a slightly modified form of baffle element which may be substituted for those shown in Figs. 15 and 16. It will be noted that the element which is of flat plate-like construction is provided on its outer surface with grooves 70, these grooves being inclined to the horizontal. The grooves may, if desired, be inclined downwardly toward the direction of gas flow so that a liquid flowing down the surfaces of the elements will be caused to travel toward the front edges of the elements. The grooves not only increase the area exposed to the gas stream, but also retain the wetting medium to prevent it from being blown off the plate surfaces. It is contemplated that the grooves will be relatively small so as to utilize the effect of surface tension of the liquid in more thoroughly filling the grooves and exposing a greater wetted surface than would be the case if the grooves were relatively large or wide.

As previously stated, it is desirable that the inclination of the baffle elements be proportioned to the velocity of the gas to be treated. In constructions where the gas velocity is constant or substantially so, the baffle elements may be permanently inclined at a desired angle. Where the velocity of the gas stream varies, however, it is desirable to provide some means for varying the inclination of the baffle elements as the velocity of the gas stream varies.

An arrangement for accomplishing this result is shown in Figs. 18 and 19, in which figures, the reference character 20° designates a casing which provides a chamber 21° connected to the portions 23° and 24° of a flue. Disposed in the chamber 21° are baffles 22°, these baffles being supported on the cross beams 25°. These cross beams are provided on their ends with trunnions 75 suitably journaled in the side walls of the casing 20° and projecting exteriorly of the casing at one side thereof. Secured to the projecting ends of the trunnions are links 76, these links being connected at their free ends to a link 77 as by the pin and slot connections 78. It will be apparent that longitudinal movement of link 77 will rock the links 76 to thus rotatively adjust the beams on their trunnions and to thus vary the inclination of the baffle elements 22°.

For effecting a longitudinal movement of the link 77 as the gas velocity varies, any suitable construction may be provided. By way of example, conduits 80 and 81 are shown as being tapped into the portions 23° and 24°, respectively, of the flue. These conduits communicate at their ends with a cylinder 82 in which a diaphragm 83 is mounted. With the diaphragm arranged in this manner it will be understood that any variations in velocity of the gas in the flue will deflect the diaphragm. For example, if there is a velocity drop, the diaphragm will deflect to the left, while if the pressure is increased, the diaphragm will be deflected to the right.

Connected to the diaphragm 83 is a rod 84 which controls a suitable valve 85, this valve in turn controlling the admission of fluid under pressure to a cylinder 86. A piston (not shown) is located in this cylinder, and this piston is connected to the link 77 to actuate the same.

With the construction disclosed, it will be apparent that as the gas velocity increases or decreases, the link 77 will be actuated to incline the baffle elements 22° to a greater or lesser extent, as desired. As brought out previously, the open tops of the baffle elements provide for the necessary movement of the baffle elements while still maintaining registration between the discharge end of nozzles 32° and the open ends of the baffle elements. It will be understood that any suitable means other than that disclosed might be provided for effecting an actuation of the link in dependence upon variations in the velocity of a gas stream, the embodiment disclosed being for the purposes of illustration only.

In Fig. 20 there is disclosed a control means adapted more particularly for use when the construction is designed to operate as a humidifier. In humidifying apparatuses, the degree of wetness of the surfaces of the baffle elements should be varied as the moisture content of the gas stream varies. This may be accomplished by mounting a hygrostat 90 in the portion 23^p of the flue, this hygrostat being of any suitable construction and being responsive to the humidity of the air being supplied to the chamber 21^p wherein the baffle elements 22^p are located. The hygrostat is suitably connected to an actuating means 91 for the valve 92, which valve is disposed in the conduit 31^p which supplies the wetting medium to the reservoir 30^p.

It will be apparent that the moistness of the baffle elements will be dependent upon the quantity of moistening medium supplied to the reservoir 30^p. Thus by providing the arrangement shown, the amount of wetting medium supplied to the reservoir and thus the amount of the wetting medium supplied to the baffle elements may be varied in direct dependence upon the dryness of the air being supplied to the chamber 21^p, with the result that regardless of the initial humidity of the air or gas, the gas will have the desired degree of saturation when it leaves the chamber 21^p.

In Fig. 21 a slightly modified form of construction is disclosed in which the hygrostat 90^q is located in the portion 24^q of the flue, thus being directly responsive to the humidity of the gas after it leaves the chamber 21^q. As in the last described form of construction, this hygrostat is arranged to control the actuation of a valve 92^q which in turn controls the supply of the

moistening medium to the reservoir 30^q. In both forms of construction it will be apparent that provision is made to obtain a desired saturation of the gas regardless of the initial dryness of the gas to be humidified. While the hygrostats have been disclosed as being either in the inlet or outlet to the gas treating chamber, it will be apparent that if desired, hygrostats might be located both in the inlet and the outlet, to provide a dual control of the moistening medium to the reservoir.

In Figs. 22 and 23 there is disclosed a further form which the baffle elements may assume. These baffle elements, designated by the reference character 22^r, are located in the chamber 21^r, it being understood that they may, if desired, be staggered with reference to each other and may be supported either vertically or inclined with reference to the direction of gas flow, as previously described.

Each baffle element comprises a hollow tube formed with longitudinally extending hollow protuberances 95. The tube is twisted so that the protuberances 95 extend spirally around the axis of the tube. Thus the protuberances provide spiral paths down the outer surfaces of the tubes, in which paths the moistening medium flows.

While the tubes may be formed in any desired manner, they may, by way of example, be formed by drawing a cylindrical tube through a die to form longitudinally extending hollow ribs or the like on the tube. The tube is then twisted to arrange the protuberances spirally around the axis of the tube, it being understood that the tube may be twisted to any extent desired to thus obtain any desired pitch to the spiral paths thus formed. The ends of the tube may, if desired, be left circular, as illustrated, to facilitate the attachment of fluid supply fittings to these tubes.

As illustrated, a moistening medium may be supplied to the lower ends of the baffle elements by fittings 96 connected to a fluid supply pipe 97. The moistening medium will enter the lower ends of the elements, flow upwardly through the elements and overflow the open upper ends thereof. The overflowing moistening medium will flow downwardly over the outer surfaces of the baffle elements by way of the spiral paths formed by the spirally arranged hollow protuberances.

If desired, the moistening supply to the baffle elements may be located as illustrated in Fig. 24 of the drawings. By reference to this figure it will be noted that baffle elements 22^s, which are similar to the baffle elements 22^r, are suitably arranged in the chamber 21^s. Instead, however, of supplying a wetting medium to the interiors of these elements, the wetting medium is supplied in this case by discharge nozzles 98 disposed in the chamber 21^s and in advance of the baffle elements. These discharge nozzles are arranged to discharge a wetting medium into the gas stream so that the latter strikes the baffle elements in a saturated condition, the moisture together with the dust in the gases being deposited on the baffle elements. The chamber 21^s is shown as being provided with a discharge conduit 27^s adjacent one side thereof by which the dust laden liquid is discharged to any suitable point.

It constitutes a further feature of this invention to provide means for automatically controlling the supply of the moistening medium to the baffle elements in dependence upon the temperature of the gases either entering or leaving the gas treating chamber. Such a construction is illustrated in Fig. 25 in which the numeral 21^t designates a gas treating chamber in which baffle elements 22^t are located. These baffle elements may assume any of the forms previously described and may be supported either vertically or inclined, as desired. The numeral 31^t designates the supply pipe for the moistening medium, this supply pipe being shown as supplying the moistening medium to the reservoir 30^t.

Located in the supply pipe is a valve 92^t which may be automatically actuated by a thermoresponsive element 100 located in the portion 23^t of the gas passage. The thermoresponsive element may be of any desired construction such as a thermocouple or the like, or may, as illustrated, be a closed container in which an expansible fluid is trapped. This container is shown as connected by a conduit 101 to a bellows or the like 102, this bellows being directly connected to the valve 92^t to actuate the latter.

The arrangement is such that the thermoresponsive element is directly responsive to the temperature of the gases supplied to the gas treating chamber and provides means whereby the supply of moistening medium to the reservoir and thus the supply to the baffle elements will be varied as the temperature of the gases varies. Thus the valve 92^t may be opened wider as the temperature of the gases rises and may be moved toward closed position as the temperature of the gases decreases.

As brought out before, the thermoresponsive element may be mounted either in the inlet or the outlet of the gas treating chamber, and mounting of this thermoresponsive element in the outlet of the gas treating chamber is shown in Fig. 26. In this figure the reference character 21^u designates a gas treating chamber in which baffle elements 22^u of any suitable construction are located. Disposed in the portion 24^u of the flue is a thermoresponsive element 100^u which may, as illustrated, be in the form of a fluid thermometer and may be connected by a conduit 101^u to a bellows 102^u. The bellows is directly connected to the valve 92^u which controls the supply of moistening medium to the baffle elements by way of the supply conduit 31^u.

With this arrangement it will be apparent that when the gases leave the treating chamber at too high a temperature, thus indicating inadequate moistening thereof, the valve 92^u will be opened further to supply more moistening medium to the baffle elements. Thus the flow of the moistening medium may be directly controlled by the temperature of the gases leaving the gas treating chamber, with the result that the gases will be moistened sufficiently to maintain the temperature thereof at some predetermined desired degree.

While the thermoresponsive elements have been disclosed as either in the inlet to or the outlet from the gas treating chamber, it will be apparent that, if desired, thermoresponsive elements may be located both in the inlet and the outlet to the gas treating chamber to thus provide a dual control for the supply of moistening medium. Still further, while both the hygrostats and thermoresponsive elements have been disclosed as being arranged to actuate valves for supplying a moistening medium to reservoirs, it is to be understood that in its broader aspects, the invention contemplates the automatic control of the moistening medium to the baffle elements themselves, regardless of whether these baffle elements re-

ceive the moistening medium from a reservoir or directly by means of supply pipes, as in certain of the embodiments of the invention disclosed. It will be apparent that in the embodiments where the moistening medium is supplied to the lower ends of the baffle elements, that as the supply is increased, more of the moistening medium will overflow the upper ends of the elements to thus vary the degree of moistening of the outer surfaces of the elements.

From the above it will be apparent that the invention provides a dust collecting, humidifying or like device in which provision is made to neutralize the effect of the gas velocity on the wetted surfaces of the baffle elements. Utilization is made of the force of gravity by inclining the elements so that the force of gravity tends to cause the wetting medium to flow to the front faces of the baffle elements. Utilization is also made of the increased area provided by grooving the surfaces of the elements so that in a limited area a great amount of moistened surface is obtained. The invention provides for an even distribution of the moistening medium over the surfaces of the baffle elements and provides that a limited amount of the liquid will moisten the surfaces sufficiently to effect a desired treatment of the gases. The invention further provides means for insuring that the opposition to the tendency of the gas stream to blow the moistening medium off of the baffle elements will be varied as the gas velocity varies and provides also that when the device is used as a humidifying apparatus, the extent of saturation of the treated gas may be maintained constant regardless of the humidity of the gas to be treated.

In describing the grooved element of Fig. 17, it was stated that the grooves were preferably relatively small so as to utilize the effective surface tension of the liquid entirely wetting the entire surface of the grooves, thus exposing a greater wetted surface than would be the case if the grooves were relatively large or wide. In fact this principle is applicable to other forms of grooved or threaded elements disclosed. It is, furthermore, a desirable feature of the invention to proportion the size of the grooves according to the surface tension of the liquid employed as a wetting or moistening medium.

While the invention has been described with some detail, it is to be understood that the description is for the purposes of illustration only and is not definitive of the limits of the inventive idea. The right is therefore reserved to make such changes in the details of construction and arrangement of parts as will fall within the purview of the attached claims.

What we claim as our invention is:

1. In an apparatus of the class described, a gas passage, an element in said gas passage in the path of the gas flow therethrough, means for supplying a moistening medium to the entire outer surface of said element, and means for causing the moistening medium on the rear face of said element to flow to the front face thereof.

2. In an apparatus of the class described, a gas passage, an element in said gas passage in the path of the gas flow therethrough, said element being of substantial thickness and of such a cross sectional shape that a liquid may readily flow around the same means for supplying a moistening medium directly to the entire outer surface of the element, and means for supporting said element in an inclined position whereby the moistening medium tends to flow by gravity to one side thereof.

3. In an apparatus of the class described, a gas passage, an element in said gas passage in the path of the gas flow therethrough, means for supplying a moistening medium directly to the entire outer surface of the element, said element being of substantial thickness and of such a cross sectional shape that a liquid may readily flow around the same and means supporting said element in such an inclined position that the moistening medium tends to flow by gravity to the portion of the element first contacted by the gas.

4. In an apparatus of the class described, a gas passage, a tubular element in said gas passage in the path of the gas flow therethrough, said element being of substantial thickness and of such a cross sectional shape that a liquid may readily flow around the same, means for supplying a moistening medium to the interior of the tubular element whereby the moistening medium overflows the top of the element and flows down the outer surface thereof, and means for supporting said element in an inclined position whereby the moistening medium tends to flow by gravity to one face thereof.

5. In an apparatus of the class described, a gas passage, a dust collecting element in said passage in the path of the gas flow therethrough, means for supplying a moistening medium to the entire outer surface of said element, means for supporting said element in a position inclined with reference to the vertical, and means for adjusting the angle of inclination of the element.

6. In an apparatus of the class described, a gas passage, an element supported in an inclined position in said gas passage in the path of the gas flow therethrough, means to supply a moistening medium to the outer surface of the element, and means operating to adjust the angle of inclination of the element upon changes in the velocity of the gas passing through the gas passage.

7. In an apparatus of the class described, a gas passage, an element in said passage in the path of the gas flow therethrough, said element having its outer surface provided with closely spaced grooves inclined with reference to the longitudinal axis of the element, and means for supplying a moistening medium to the grooved outer surface of said element.

8. In an apparatus of the class described, a gas passage, an element in said passage in the path of the gas flow therethrough, said element being provided with a spiral groove in its outer surface, means supporting said element in an inclined position, and means for supplying a moistening medium to the grooved outer surface of said element.

9. In an apparatus of the class described, a gas passage, an element in said gas passage disposed transversely of the path of the gas flow therethrough, the outer surface of said element being provided with multiple threads, and means for supplying a moistening medium to the threaded outer surface of said element.

10. In an apparatus of the class described, a gas passage, an element in said gas passage in the path of the gas flow therethrough, means for supplying a moistening medium to the outer surface of said element, and means including a hygrostat disposed in said gas passage in advance of the element for controlling the supply of the moistening medium to the element.

11. In an apparatus of the class described, a substantially horizontal gas passage, an element

in said gas passage extending substantially from the top to the bottom of the passage, and means to apply a liquid to the outer surface of the element at the top thereof, said element being provided with a continuous spiral extending substantially from the top to the bottom thereof.

12. In an apparatus of the class described, a substantially horizontal gas passage, an element disposed substantially vertical in said gas passage in the path of the gas flow therethrough, said element having protuberances extending spirally longitudinally thereof, and means for supplying a moistening medium to the outer surface of the element.

13. In an apparatus of the class described, a gas passage, an element supported in an inclined position in said passage in the path of the gas flow therethrough, means to supply a moistening medium to the outer surface of the element, and means for varying the angle of inclination of the element, said means being automatically operable in dependence upon the velocity of the gas flowing through the said gas passage.

14. In an apparatus of the class described, a gas passage, an element extending in said passage in the path of the gas flow therethrough, and means for supplying a liquid to the outer surface of said element, the surface of said element being provided with means affording a continuous path of travel for said liquid substantially greater than the length of said element.

15. In an apparatus of the class described, a gas passage, means to supply a gas to said passage to produce a flow of the gas therethrough, an element in said passage in the path of the gas flow therethrough, and means to supply a liquid to said element so as to flow over the outer surface of said element, said surface being so grooved as to maintain a substantially uniform liquid flow thereover.

16. In an apparatus of the class described, a gas passage, an element in said passage in the path of the gas flow therethrough, said element having its outer surface spirally grooved throughout its length, means for supplying liquid to said surface, and means for controlling said liquid supply.

17. In an apparatus of the class described, a gas passage, means providing a threaded surface in the gas passage in the path of gas flow therethrough, and means for supplying a liquid to said threaded surface, the size of the threads in said surface being so proportioned to the surface tension of the liquid supplied to the surface that the liquid will form menisci from the ridge of each thread to the ridge of the next thread.

18. In an apparatus of the class described, a gas passage, means in said gas passage in the path of the gas flow therethrough providing a threaded surface angularly disposed with reference to the horizontal, and means for supplying a liquid to the threads at the upper end of said surface in such amounts that the liquid will not overflow the threads, the size of the threads in the surface being so proportioned to the surface tension of the liquid supplied to the surface that the liquid will form menisci from the ridge of each thread to the ridge of the next thread.

19. In an apparatus of the class described, a gas passage, an element in said gas passage in the path of the gas flow therethrough, said element having a grooved outer surface, and means for supplying a liquid to the outer surface of said element to wet the same, the grooves in said surface being relatively small whereby the surface tension of the liquid will cause the liquid in each groove to be held up to the extreme edges of its respective groove.

20. In an apparatus of the class described, a gas passage, a baffle disposed in said gas passage in the path of the gas flow therethrough and at an angle to the horizontal, the outer surface of said baffle being spirally threaded throughout its length, and means for supplying a liquid to the threads at the upper end of said element in such amounts that the liquid will not overflow the spiral threads on the element, the size of the threads on said element being so proportioned to the surface tension of the liquid supplied to the surface of the element that the liquid will form a meniscus from the ridge of each thread to the ridge of the next adjacent thread.

21. In an apparatus of the class described, a gas passage, a baffle element in said gas passage in the path of the gas flow therethrough, and means for supplying a moistening medium to the outer surface of the baffle element, the outer surface of the baffle element being so grooved as to cause the moistening medium on the rear face of the baffle element to flow to the front face thereof.

22. In an apparatus of the class described, a substantially horizontal gas passage, a grooved baffle element disposed at an inclination to the vertical in said gas passage and in the path of the gas flow therethrough, and means for supplying a moistening medium to the outer surface of the baffle element, the inclination of the element and the arrangement of threads thereon being such that the slope of the threads on one side of the baffle element is increased while the slope of the threads on the other side of the baffle element is decreased, the slope of the threads being decreased in the direction of gas flow past the baffle element.

CURTIS L. HOWSE.
HARRY E. BRELSFORD.
SAMUEL F. COX.
WILLIS P. THOMAS.