Feb. 15, 1966 J. S. GILBERT 3,234,985

HANDBAG WITH CHANGEABLE COVERS

Filed Dec. 11, 1963

Fig. 1

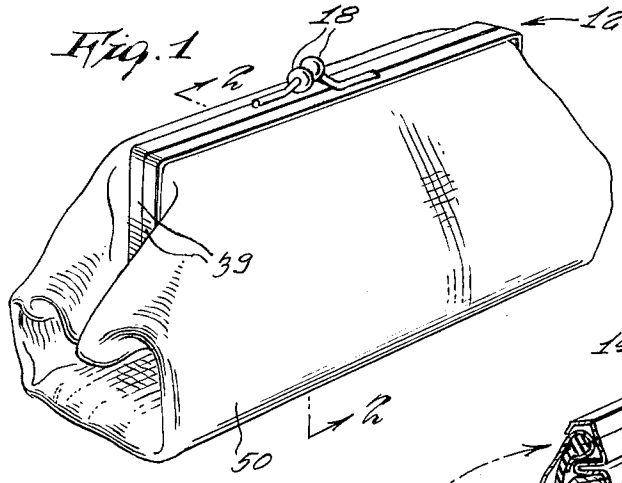

Fig. 2

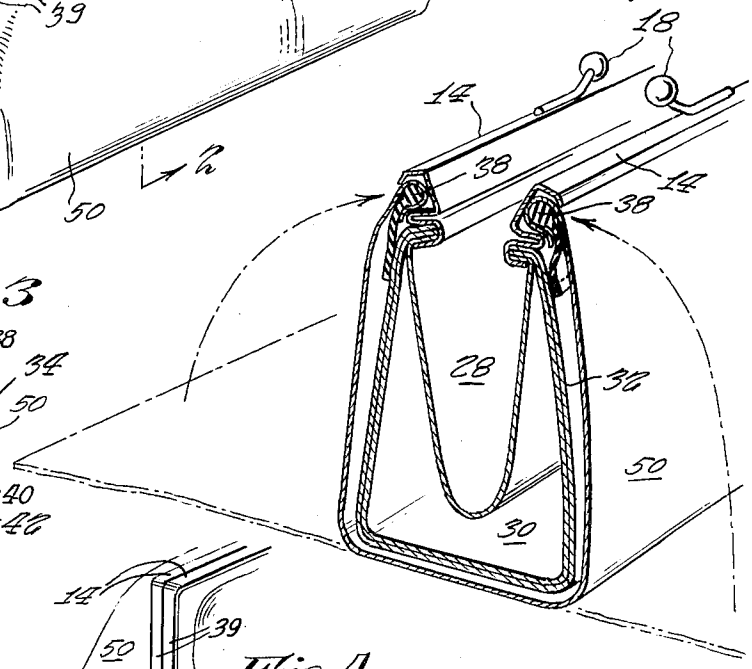

Fig. 3

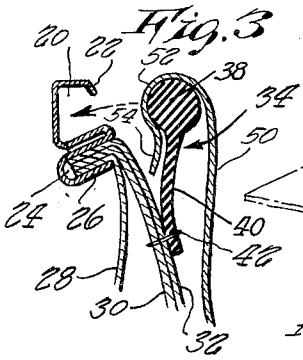

Fig. 4

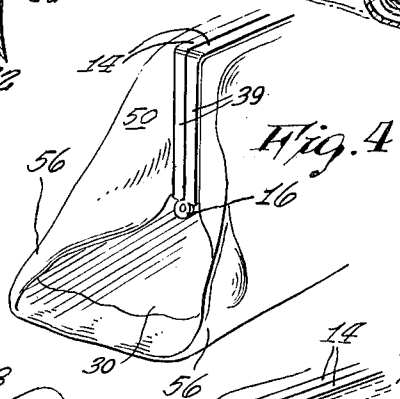

Fig. 6

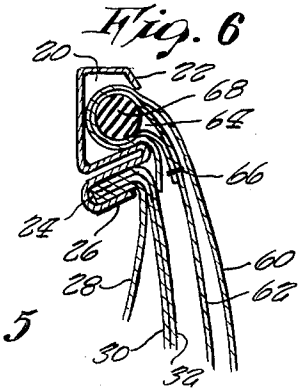

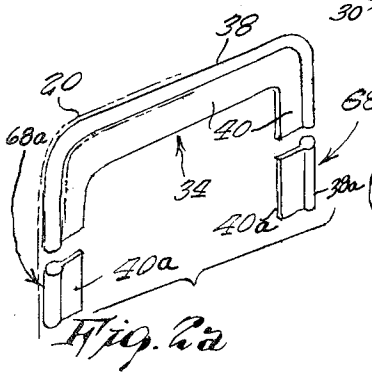

Fig. 2a

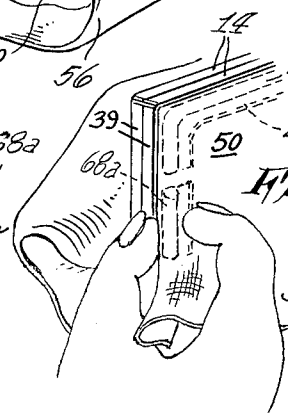

Fig. 5

INVENTOR.
JOHN S. GILBERT
BY
Jacob L. Kollin
ATTORNEY

United States Patent Office 3,234,985 Patented Feb. 15, 1966

3,234,985

HANDBAG WITH CHANGEABLE COVERS

John Stephen Gilbert, 330 W. 86th St., New York, N.Y.

Filed Dec. 11, 1963, Ser. No. 329,717
2 Claims. (Cl. 150—29)

This invention relates to handbags in general and in particular to a handbag provided with means for changing and replacing the outside cover of the bag without the use of tools of any kind.

As is well known, most women consider their handbags as a necessary matching part of their outfits; they usually have different bags to match different clothing outfits. With this invention, the same handbag may be used and made to match any desired outfit by merely having a cover matching the outfit, readily removable and replaceable on the handbag, thus eliminating the necessity for changing the contents of the handbag from one bag to another and enabling a matching cover for the outfit to be readily placed in position on the handbag.

An important object of this invention is to provide a handbag employing a choice of readily removable and replaceable wrap around covers therefor with means for latching the free end of the covers to the frame of the handbag.

This and other objects of the invention will become apparent from the following description and the accompanying drawing comprising the specification of the invention.

In the drawing:

FIG. 1 is a perspective view of a handbag incorporating the invention,

FIG. 2 is an enlarged perspective view, partly in cross-section taken on line 2—2 of FIG. 1,

FIG. 2*a* is an exploded view of the securing inserts used on a single side of the handbag frame,

FIG. 3 is an enlarged view of a cross-sectional detail shown in FIGURE 2, showing the cover being attached,

FIG. 4 is a fragmentary perspective of a handbag showing the assembly partly completed,

FIG. 5 is a similar view showing a flap being tucked in and

FIG. 6 is a view similar to FIGURE 3, showing a modified construction detail.

Referring now to the drawing in detail, the handbag assembled according to the invention comprises a frame **12** formed by top frame channels **14** and side channels **39** and provided with hinge elements **16** and clasps **18**. As shown in FIGS. 2 and 3, the frame channels are of substantially U-shaped cross-section and are formed with lips **22**, the lips forming openings to the channels somewhat narrower than the channels themselves.

Integrally secured to the top channels **14** and side channels **39** are clamps **24** formed with lips **26**. Clamps **24** are of a width dimensioned to receive the edge portion of the handbag's inner lining **28**, stiffening panel **30** and a decorative outer lining or fabric cover **32** extending past the side channels **39**, and glued to the stiffening panel. These edge portions are permanently secured in clamps **24** by crimping the clamp lips **26** and, if desired, by gluing. Secured by stitching **42**, to the stiffening panel **30** and fabric cover **32**, along the top frame channels **14** and part way of the side channels **39**, as clearly shown in FIG. 2*a*, are resilient inserts **34** of cylindrical cross-section **38** provided with flanges **40**. While flanges **40** may be attached to the stiffening material and outer lining by stitching other appropriate means may likewise be employed. The inserts may advantageously be made of rubber or resilient plastic material. The flanges **40** may, if desired, be secured to the outer lining by an adhesive.

A number of rectangular pieces of fabric differing in color and pattern are provided as a choice of outer decorative covers for the handbag. These pieces are slightly wider than the periphery of the bag and longer than the latter's frame.

There are additionally secured to the lower portions of side channels **39**, in the same manner as described above, resilient inserts **68**a for a purpose hereinafter to be described.

FIG. 2*a* illustrates the top and side inserts used in the inventive construction.

To secure the desired outer decorative cover **50** to the handbag frame the top edges of the cover are formed into folds **52** about the inserts **38**, as shown in enlarged detail in FIG. 3, so that the edges **54** of the outer cover are positioned between outer lining **32** and flange **40** of the inserts **38**. The inserts **38** with the overlying folds **52** thereon are forced into the channels **20** in the direction of the arrow, as shown in FIG. 3, while the decorative cover **50** is drawn snugly about the lining **32**. Only slight pressure is required for this purpose, due to the resiliency of the inserts, which securely hold the outer decorative cover **50** after emplacement, in channels **20**.

As previously noted the resilient inserts **38** extend partly along the side channels **39** of the frame. The remaining portions of the upper edges of the decorative cover **50** are attached to the upper portions of the side channels in the same manner, as shown in FIG. 5.

The short inserts **68***a*, each consisting of a cylindrical section **38***a* and flange **40***a* are secured to the bottom portions of the sides of the stiffening panel **30** and the lining **32** by stitching or adhesive, are next covered with folds made of the extending side edges of the outer decorative cover **50** and are forced with this cover into the lower portions of the side channels **39** of the frame, as shown in FIG. 5, thus forming attractive projecting wings **56**, as shown in FIG. 4. The extending side edges of the decorative material **50** lend themselves to folding, because they are not supported by stiffening material.

A modified construction of the invention is shown in part in FIG. 6. In this modification there is additionally provided a fabric liner **62**, formed with an end pocket **64** snugly enclosing a resilient insert of cylindrical cross-section **68** for the channel **20** of the frame and secured thereto by means of stitching **66**, and a resilient insert similarly secured, for the side channel of the frame (not shown).

The outer fabric is designated by the numeral **60**.

There has thus been provided, by the present invention, a handbag with changeable covers which can be easily removed and replaced without resorting to tools of any kind, and which is simple in construction and lends itself to mass production at a reasonable cost.

It should be understood, however, that the invention is not limited to the embodiments described herein, but that various modifications of the details of construction, sizes and shapes are envisioned herein, without departing from the purpose or scope of said invention.

Having thus described the invention, what I claim and desire to secure by Letters Patent of the United States is:

1. In a handbag adapted for use with changeable decorative covers, a frame comprising a pair of U-shaped frame channels, hinge elements pivotally securing said U-shaped channels to one another, clamps extending along said channels and integral therewith, an inner lining permanently secured to said clamps, stiffener panels secured to said clamps outwardly of said inner lining, a fabric cover secured to said clamps outwardly of said stiffener panels, first displaceable resilient securing insert means attached to part of the edges of said fabric cover and said stiffener panels, a decorative cover having a part of its edge portions folded over said first resilient securing insert means, second displaceable resilient insert means for securing another part of the edge portions of said decora-

tive cover to said U-shaped frame, all said securing insert means being removably received in said channels.

2. In a handbag adapted for use with changeable decorative covers, a frame comprising a pair of U-shaped frame channels, each having a horizontal portion and downwardly extending portions, hinge elements pivotally securing said U-shaped channels to one another, clamps extending along said channels and integral therewith, an inner lining permanently secured to said clamps, stiffener panels secured to said clamps outwardly of said inner lining, an outer lining secured to said clamps outwardly of said stiffener panels, first displaceable resilient securing insert means attached to the edges of said outer lining and said stiffener panels and extending along a respective horizontal portion of said channels and part way along said downwardly extending portions, a decorative cover having top and upper side edge portions folded over said first resilient securing insert means, said decorative cover having lower side portions, second displaceable resilient insert means for securing said lower side portions of said decorative cover to said downwardly extending portions

of said U-shaped frame, all said securing insert means being removably received in said channels.

References Cited by the Examiner

UNITED STATES PATENTS

1,316,919	9/1919	Normandy	150—5
2,036,608	4/1936	Rosenberg	150—28.1
2,649,939	8/1953	Donald et al.	190—41.3
2,694,427	11/1954	Hovis	150—28.1
2,887,138	5/1959	Solomon	150—28

FOREIGN PATENTS

986,048	3/1951	France.
659,230	10/1951	Grat Britain.
470,910	4/1952	Italy.
277,889	6/1952	Switzerland.

GEORGE O. RALSTON, *Primary Examiner.*

FRANKLIN T. GARRETT, JOSEPH R. LECLAIR, *Examiners.*

M. L. MINSK, *Assistant Examiner.*