Aug. 31, 1937. J. T. SODERBERG ET AL 2,091,721

END GATE FOR RAILWAY CARS

Filed Aug. 29, 1936 2 Sheets-Sheet 1

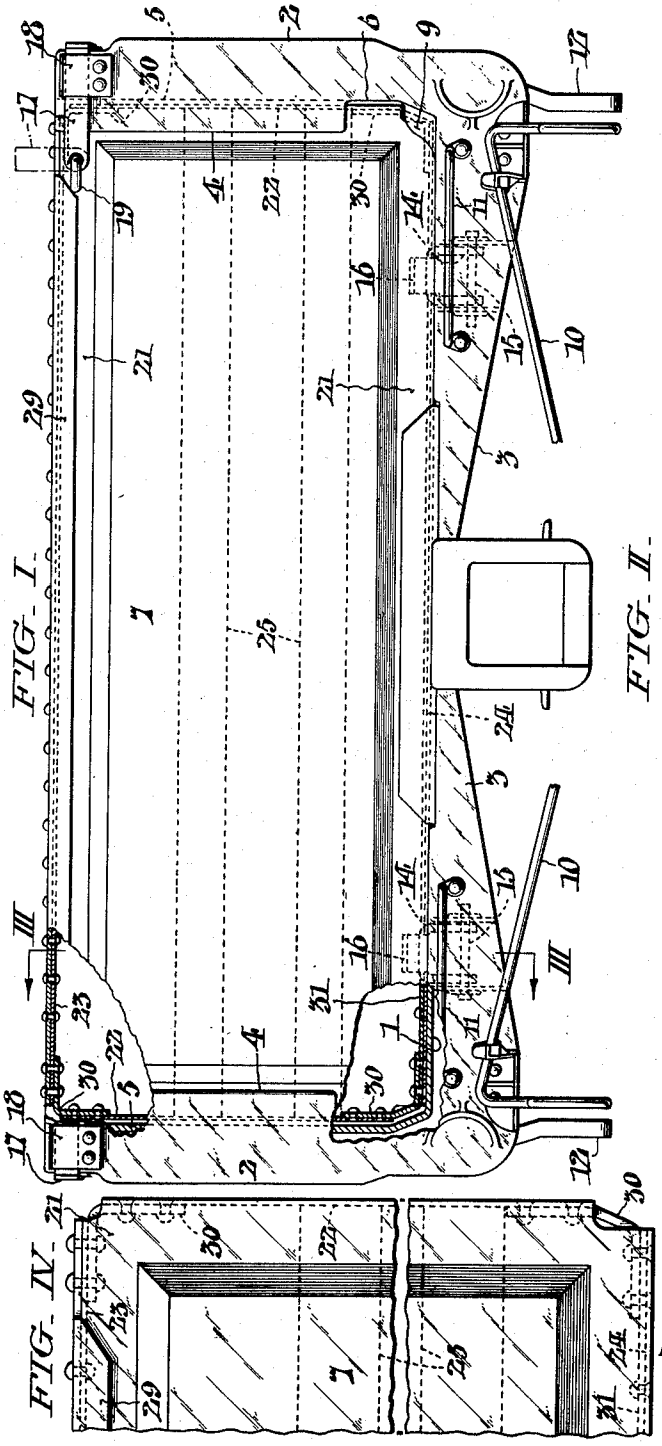

FIG. I.

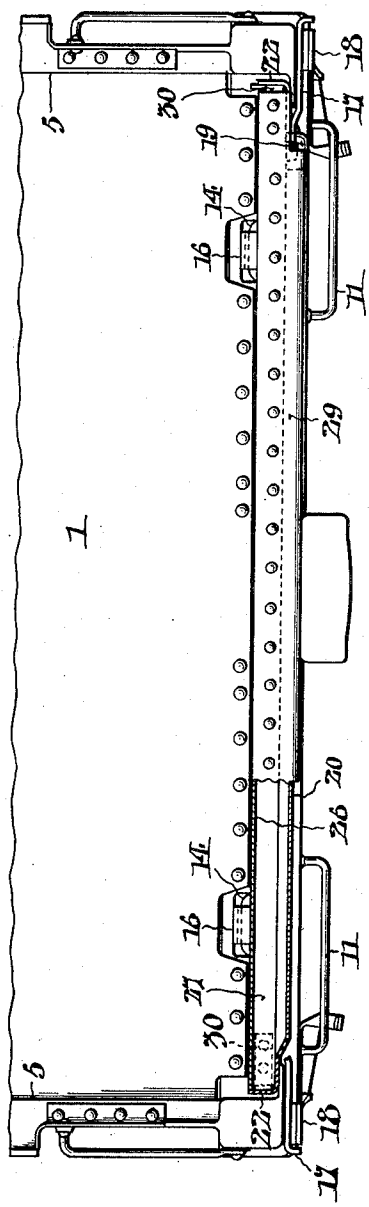

FIG. II.

FIG. IV.

INVENTORS:
John T. Soderberg &
Samuel McCurdy,
BY Fraser & Paul
ATTORNEYS.

Aug. 31, 1937. J. T. SODERBERG ET AL 2,091,721

END GATE FOR RAILWAY CARS

Filed Aug. 29, 1936 2 Sheets-Sheet 2

FIG. III.

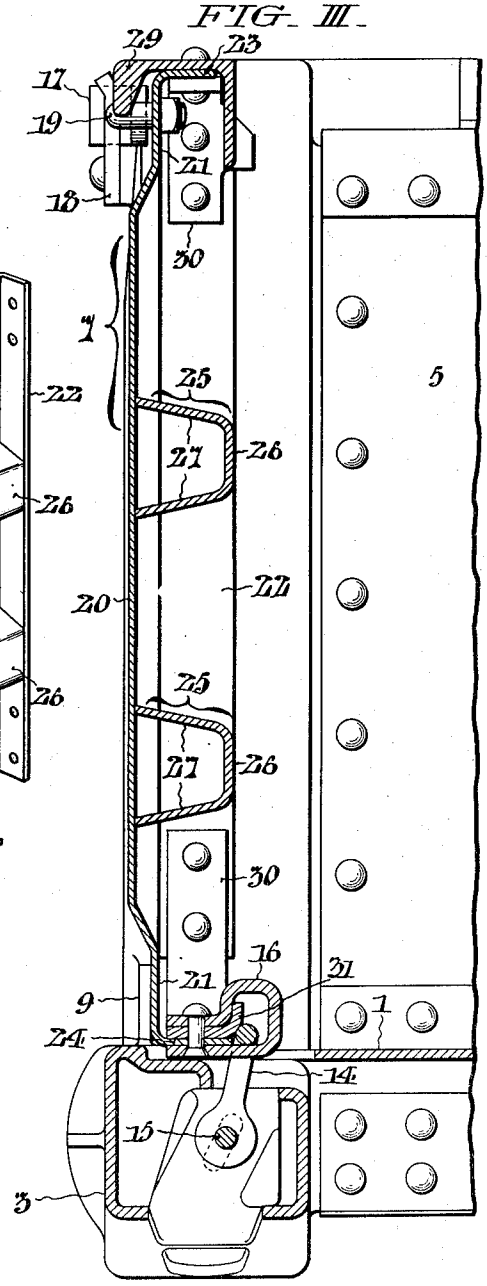

FIG. V.

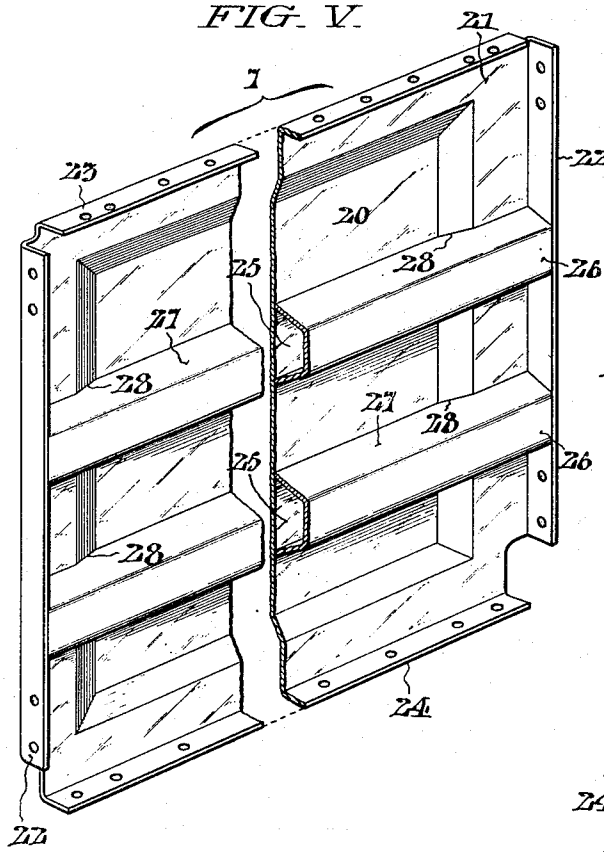

WITNESSES:

Thomas W. Kerr, Jr.

William Breed, Jr.

INVENTORS:

John T. Soderberg &

Samuel McCurdy,

BY Fraser & Paul

ATTORNEYS.

Patented Aug. 31, 1937 2,091,721

UNITED STATES PATENT OFFICE

2,091,721

END GATE FOR RAILWAY CARS

John T. Soderberg, Hollidaysburg, and Samuel McCurdy, Altoona, Pa.

Application August 29, 1936, Serial No. 98,510

3 Claims. (Cl. 105—410)

This invention relates to end gates for railway cars, and more particularly to drop end gates for gondola cars or the like, which in upright position form the end wall of the car and which may be lowered to a horizontal position to accommodate long loads extending beyond the end of the car, or from one car to another. Such gates may also be used as a bridge to span the space between the end of the car and a platform. An example of a gondola car to which the end gate of this invention is particularly adapted is shown in U. S. Letters Patent to William F. Kiesel, Jr., No. 1,870,575, granted August 9, 1932.

One object of the invention is to provide an end gate which is of light construction, yet sufficiently reinforced at critical regions to resist the shocks of shifting loads caused by sudden stopping or starting of the car.

Another object of the invention is to provide an end gate for a railway car which is constructed of sheet metal and formed in such manner as to increase the cubical capacity of the car for bulk material such as sand, coal or the like, and stiffened by one or more transverse beams which extend from one side of the car to the other, the beams being so incorporated within the gate as to avoid decreasing the clear inside length of the car.

Another object of the invention is to provide one or more reinforcing beams for an end gate of the character described, such beams bridging the area between the corner posts and overlapping the inwardly projecting flanges of the end posts. Desirably the end gate is of a general tray-shaped configuration, and the reinforcing beams are conformed to the sectional contour thereof and integrally united throughout their length to the end gate.

Other objects and advantages of this invention, including those derived from simplicity and economy of manufacture, will be apparent from the description hereinafter set forth of one embodiment or example of the invention, having reference to the accompanying drawings. Of the drawings:

Fig. I represents an end elevation of a gondola car embodying our invention, with certain parts cut away to reveal details of construction which would otherwise be concealed.

Fig. II represents a plan view of the end of the car, with certain portions cut away for a like purpose.

Fig. III represents a vertical cross section, taken as indicated by the lines III—III of Fig. I.

Fig. IV represents an enlarged view of the top and bottom corners of the end gate; and,

Fig. V represents a fragmentary perspective view of the end gate, omitting the reinforcements which are attached to the top, bottom and corners thereof.

In the drawings, the end gate of this invention is shown applied to a gondola car of the type represented in U. S. Letters Patent No. 1,870,575, to William F. Kiesel, Jr., referred to above. The end construction of the car comprises generally a platform 1, and corner castings having vertical arms 2 which serve as end posts, and having horizontal arms 3 which form the end sill of the car. The end posts 2 have flanges 4 formed integrally therewith which project inwardly beyond the inside face of the side walls 5. The flanges 4 are cut out as indicated at 6 to provide openings through which the end gate, comprehensively designated at 7, may be passed when it is to be removed or used as a bridge or platform. The sill portions 3 of the corner casting have integrally formed therewith flanges 9 which project upwardly and against which the end gate 7 abuts in its upright position.

The car may be provided with the usual uncoupling rods 10, grab irons 11 and side steps 12. Desirably, the end gate is hinged to the car in a customary manner by links 14 pivotally connected to the sill portions 3 of the corner casting by means of bolts 15. The links 14 are in turn attached to pressed metal brackets 16 riveted to the bottom of the end gate. The links 14 serve as demountable hinges permitting the end gate 7 to be swung downward to the car floor 1 or to be removed as desired.

When the end gate 7 is in its normal upright position, it is held in place at the top by means of pivoted latches 17 which engage keepers 18 riveted to the top of the corner castings. The end gate 7 may be released at the top by swinging each latch 17 upwardly about the U-bolt 19 to which it is pivoted, to the position represented in dot-and-dash lines at the right hand of Fig. I.

The end gate 7, as represented most clearly in Fig. V, is made from a sheet of metal with its central portion bulged outwardly to form a panel 20 and with a surrounding flat marginal portion 21 merging into inturned side flanges 22 and top and bottom flanges 23, 24. These flanges are cut away at all four corners. As thus fabricated, the end gate is of a generally tray-shaped configuration with the panel 20 bulged outwardly in such manner as to increase the cubical capacity of the car.

In order to give adequate strength to the end gate, without decreasing the clear inside length of the car, transverse beams 25 are provided. Preferably the beams 25 are of channel cross section, the exposed web portions 26 lying in a vertical plane coincident with the edges of the side flanges 22. The sides 27 of the reinforcing beams 25 are integrally united to the side flanges 22, the bulged panel 20 and the surrounding flat marginal portions 21 by welding. It will be particularly noted that the sides 27 of each transverse beam 25 are cut out as indicated at 28 to conform to the sectional contour of the surfaces to which the beam is welded. Thus the transverse beams 25 increase in depth from the ends toward the center and afford maximum reinforcement at the areas where maximum stresses occur. At the same time the transverse beams 25 have their exposed webs 26 flush with the edges of the inturned flanges 22, 23, 24.

As shown most clearly in Fig. III, the top flange 23 of the end gate is reinforced by a bulb angle 29. The bulb angle 29 substantially surrounds the top flange 23 and is riveted thereto. The bottom flange 24 of the end gate is reinforced at the regions where it is hinged to the car floor by means of the pressed metal brackets 16, and is additionally reinforced throughout its length by an angle bar 31 overlying the flange 24. At the four corners the end gate is reinforced by pressed steel corner brackets 30.

The end gate 7 is of such construction that when resting upon the floor of the car any load thereon is applied not only through the flanges 22, 23, 24, but also through the webs 26 of the transverse beams 25 which lie in the same plane. Moreover, the construction of the end gate is such that it can conveniently be used as a bridge or platform, and as such can withstand heavy loads.

It will be noted that when the end gate 7 is in its normal upright position, the flat marginal portions 21 abut directly against the inwardly projecting flanges 4 of the corner posts, and the marginal portions 21 also abut against the upwardly projecting flanges 9 of the end sill of the car. Thus the outwardly bulged panel 20 does not interfere with proper seating of the end gate in its vertical position. It will also be observed that the transverse beams 25 bridge the area between the end posts in overlapping relation with the inwardly projecting flanges 4. The beams 25 thus serve as box girders adequately resisting shocks such as those produced by the shifting of the load incident to sudden stopping or starting of the car.

While we have shown one example of a railway car embodying an end gate of this invention, it will be obvious to those skilled in the art that various changes and modifications may be made in the particular form of car and end gate herein described and illustrated, without departing from the spirit of our invention as defined in the annexed claims.

Having thus described our invention, we claim:

1. An end gate for a railway car comprising a metal sheet having a bulged central panel and a surrounding marginal portion merging into inturned side flanges, and a reinforcing beam extending across said sheet from one side flange to the other and integrally united to said sheet throughout the length thereof, said beam having an exposed surface lying in the plane of the edges of said side flanges and opposite surfaces conforming to the sectional contour of said bulged panel and the surrounding marginal portion of the sheet.

2. An end gate for a railway car comprising a metal sheet having a bulged central panel and a surrounding marginal portion merging into inturned side flanges, and a reinforcing beam of channel section welded to and extending across said sheet from one side flange to the other, the web portion of said channel beam lying in the plane of the edges of said side flanges and the sides of said beam being cut away to conform to the sectional contour of said bulged panel and the surrounding marginal portion of the sheet.

3. In a railway car, corner castings in the form of angles having vertical arms adapted to serve as end posts and provided with inwardly projecting flanges and horizontal arms adapted to serve as an end sill and provided with upwardly projecting flanges, and an end gate comprising a metal sheet having an outwardly bulged central panel whereby the cubical capacity of the car is increased, and having surrounding flat marginal portions abutting against said inwardly and upwardly projecting flanges of the corner angles, and having inwardly turned flanges surrounding said flat marginal portion, and a beam extending transversely of the car across said sheet and having one surface conforming to the sectional contour of said sheet and welded thereto and an opposite exposed surface disposed in the plane of the edges of said inwardly turned flanges of the sheet, said beam bridging the area between the end posts in overlapping relation with the inwardly projecting flanges of the end posts.

JOHN T. SODERBERG
SAMUEL McCURDY.