US00D358524S

United States Patent [19]

Sedon et al.

[11] Patent Number: Des. 358,524

[45] Date of Patent: ** May 23, 1995

[54] **AUDIO CASSETTE STORAGE AND DISPLAY RACK**

[75] Inventors: **Nicholas M. Sedon**, North Canton; **James T. Weisburn**, Massillon; **David A. Houk, Jr.**, Norton, all of Ohio

[73] Assignee: **Alpha Enterprises, Inc.**, North Canton, Ohio

[**] Term: **14 Years**

[21] Appl. No.: **25,938**

[22] Filed: **Jul. 18, 1994**

[52] **U.S. Cl.** **D6/629**

[58] **Field of Search** D6/396, 405, 407, 462, D6/466, 467, 468, 626, 629, 630; D14/120, 121; D19/75, 76, 91; 211/40, 41, 42; 206/387

[56] **References Cited**

U.S. PATENT DOCUMENTS

D. 28,839	6/1898	Kirkwood .	
D. 126,056	3/1941	Summers .	
D. 161,815	7/1950	Boeman .	
D. 216,605	2/1970	Brindley	D6/407 X
D. 332,708	1/1993	Schmidt et al.	D6/407
1,647,922	11/1927	Linder .	
4,629,067	12/1986	Pavlik et al.	206/425
4,850,477	7/1989	Gelardi et al.	206/387 X
4,960,205	10/1990	Wang	206/387
5,297,675	3/1994	Martucci	206/387 X
5,346,078	9/1994	Ernetoft	211/40 X

Primary Examiner—Alan P. Douglas
Assistant Examiner—S. Snapp
Attorney, Agent, or Firm—Michael Sand Co.

[57] **CLAIM**

The ornamental design for an audio cassette storage and display rack, as shown and described.

DESCRIPTION

FIG. **1** is a perspective view of an audio cassette storage and display rack showing our new design;
FIG. **2** is a top plan view thereof;
FIG. **3** is a bottom plan view thereof;
FIG. **4** is a front elevational view, the rear elevation view being the same;
FIG. **5** is a right side elevational view of FIG. **2**, the left side being the same;
FIG. **6** is a sectional view taken on line **6—6**, FIG. **2**; and,
FIG. **7** is a sectional view taken on line **7—7**, FIG. **2**.

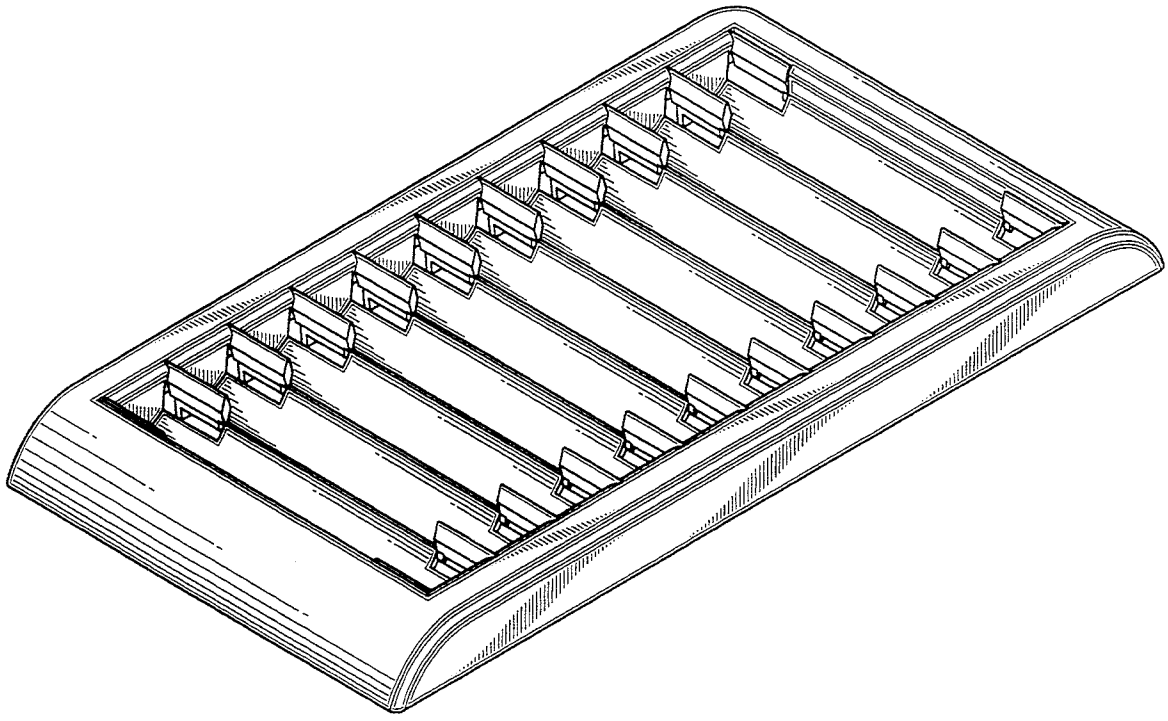

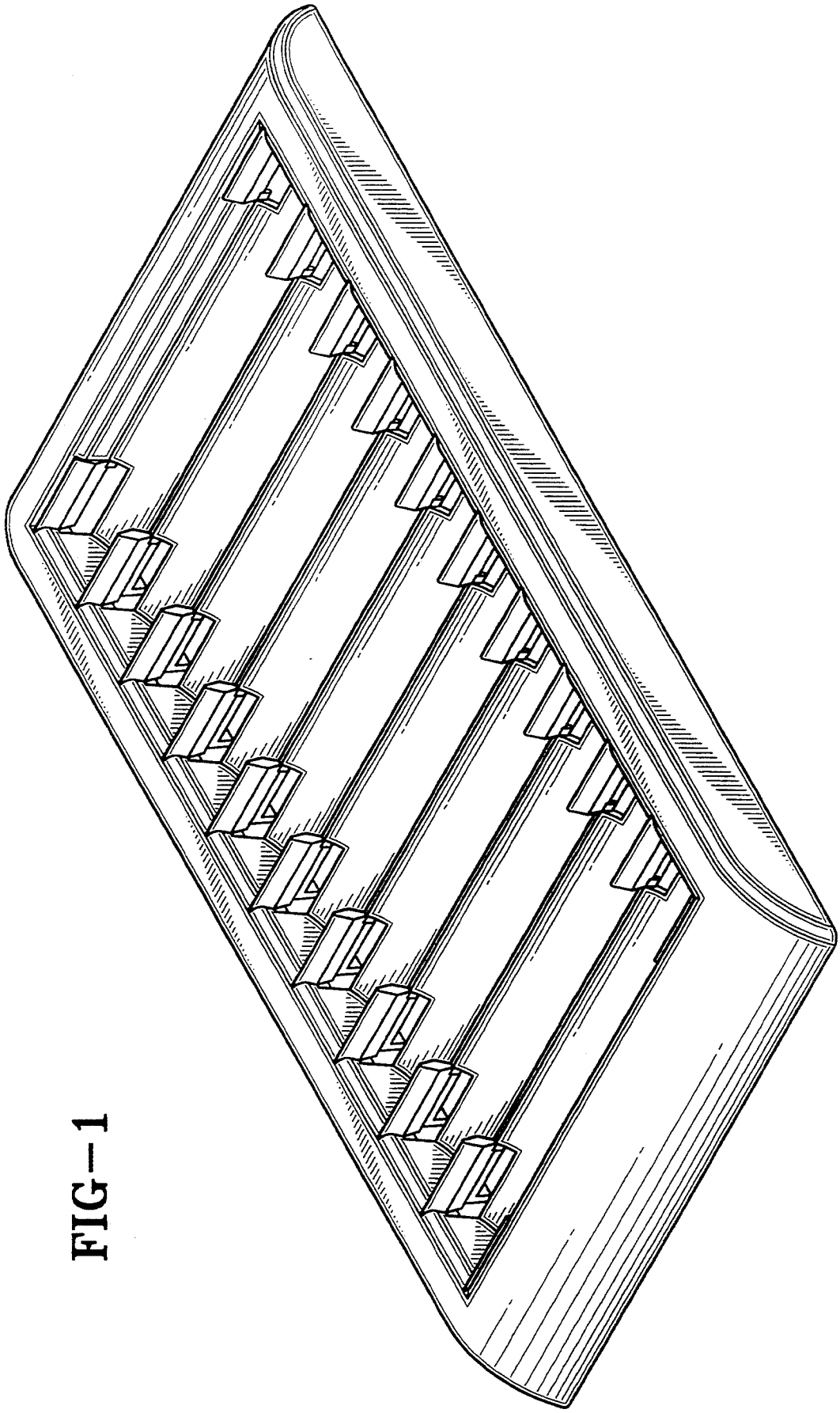

FIG—1

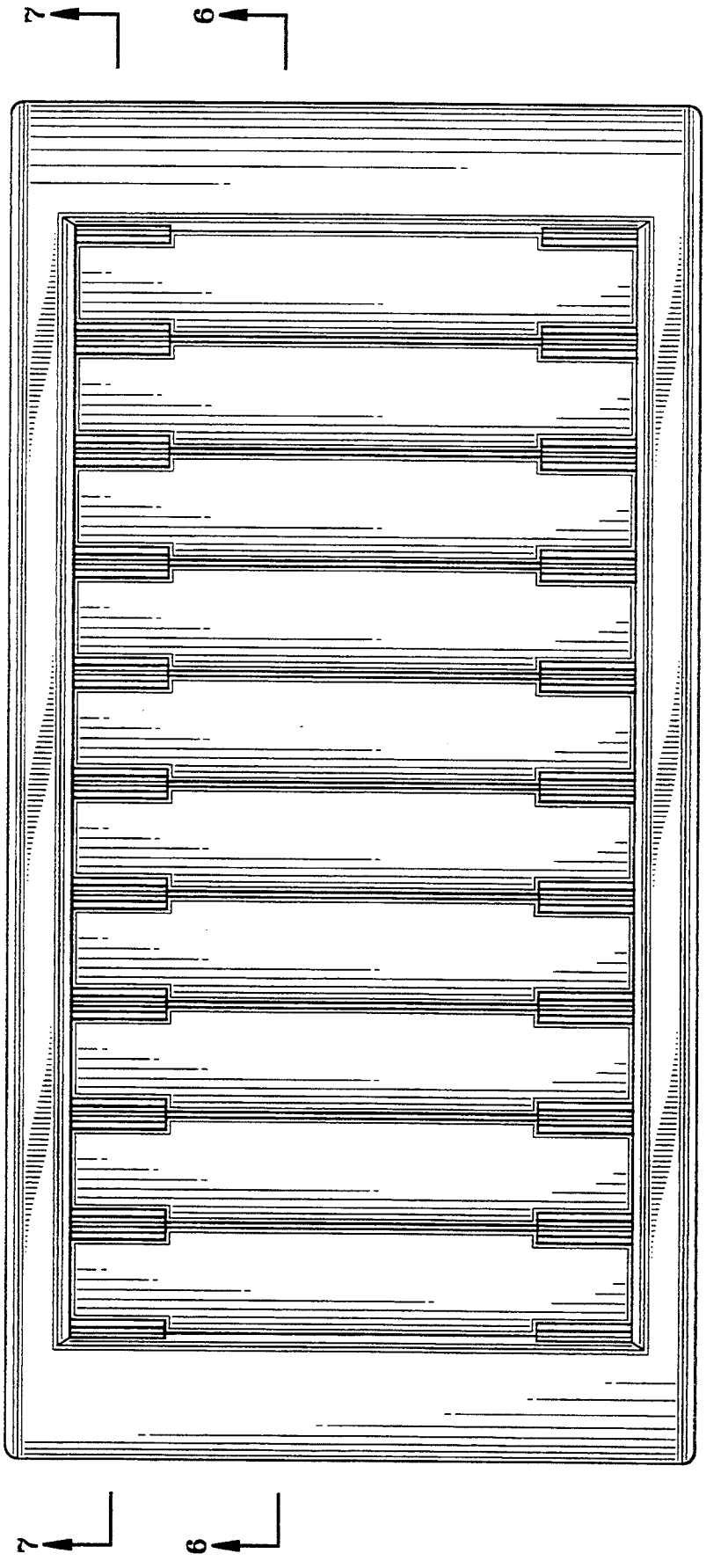

FIG-2

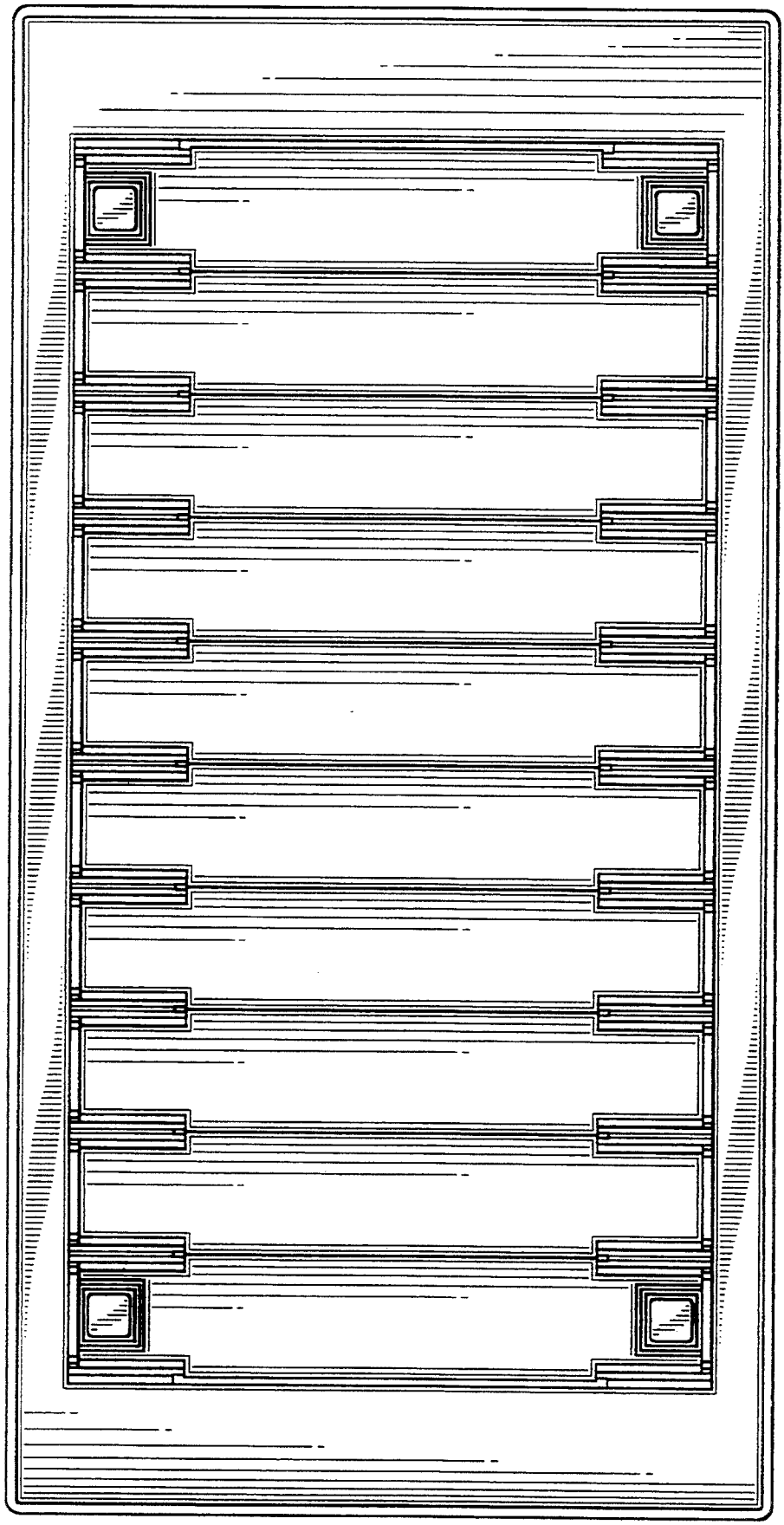

FIG—3

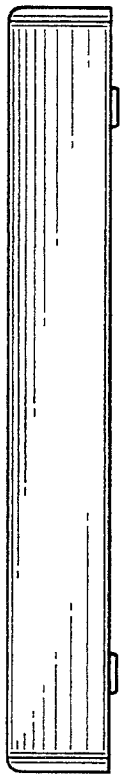

FIG-4

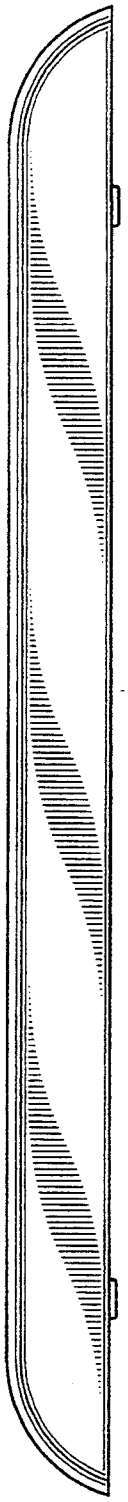

FIG-5

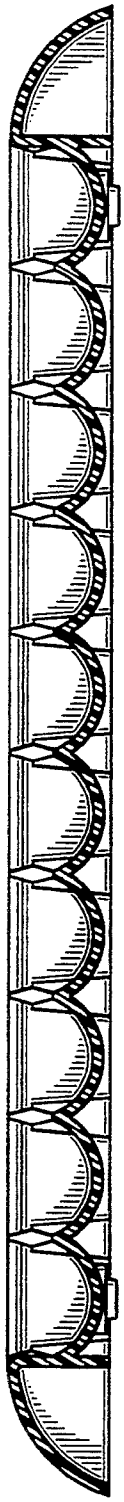

FIG-6

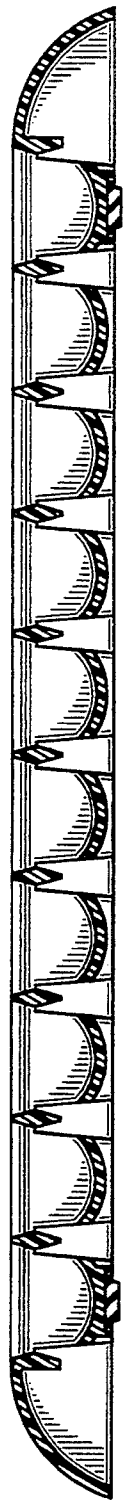

FIG-7