(12) INTERNATIONAL APPLICATION PUBLISHED UNDER THE PATENT COOPERATION TREATY (PCT)

(19) World Intellectual Property Organization
International Bureau

(43) International Publication Date
26 June 2014 (26.06.2014)

WIPO | PCT

(10) International Publication Number
WO 2014/098747 A1

(51) International Patent Classification:
B01J 19/18 (2006.01) *B09B 3/00* (2006.01)
B02C 13/04 (2006.01) *C10J 3/74* (2006.01)

(21) International Application Number:
PCT/SE2013/051543

(22) International Filing Date:
17 December 2013 (17.12.2013)

(25) Filing Language: Swedish

(26) Publication Language: English

(30) Priority Data:
1251493-1 21 December 2012 (21.12.2012) SE
61/740,815 21 December 2012 (21.12.2012) US

(71) Applicant: **CASSANDRA OIL TECHNOLOGY AB** [SE/SE]; Sjöhagsvägen 14, S-721 32 Västerås (SE).

(72) Inventor: **OLSSON, Anders**; Wellpools Farm, Stanhill, Charlwood, Surrey surrey RH60ES (GB).

(74) Agent: **AXELSSON, Nils Åke**; Groth & Co KB, Box 6107, SE-102 32 Stockholm (SE).

(81) Designated States *(unless otherwise indicated, for every kind of national protection available)*: AE, AG, AL, AM, AO, AT, AU, AZ, BA, BB, BG, BH, BN, BR, BW, BY, BZ, CA, CH, CL, CN, CO, CR, CU, CZ, DE, DK, DM, DO, DZ, EC, EE, EG, ES, FI, GB, GD, GE, GH, GM, GT, HN, HR, HU, ID, IL, IN, IR, IS, JP, KE, KG, KN, KP, KR, KZ, LA, LC, LK, LR, LS, LT, LU, LY, MA, MD, ME, MG, MK, MN, MW, MX, MY, MZ, NA, NG, NI, NO, NZ, OM, PA, PE, PG, PH, PL, PT, QA, RO, RS, RU, RW, SA, SC, SD, SE, SG, SK, SL, SM, ST, SV, SY, TH, TJ, TM, TN, TR, TT, TZ, UA, UG, US, UZ, VC, VN, ZA, ZM, ZW.

(84) Designated States *(unless otherwise indicated, for every kind of regional protection available)*: ARIPO (BW, GH, GM, KE, LR, LS, MW, MZ, NA, RW, SD, SL, SZ, TZ, UG, ZM, ZW), Eurasian (AM, AZ, BY, KG, KZ, RU, TJ, TM), European (AL, AT, BE, BG, CH, CY, CZ, DE, DK, EE, ES, FI, FR, GB, GR, HR, HU, IE, IS, IT, LT, LU, LV, MC, MK, MT, NL, NO, PL, PT, RO, RS, SE, SI, SK, SM, TR), OAPI (BF, BJ, CF, CG, CI, CM, GA, GN, GQ, GW, KM, ML, MR, NE, SN, TD, TG).

Published:
— *with international search report (Art. 21(3))*

(54) Title: REACTOR, METHOD OF DECREASING THE AMOUNT OF SOLID PARTICLES IN A GAS STREAM FROM A REACTOR AND USE OF THE REACTOR

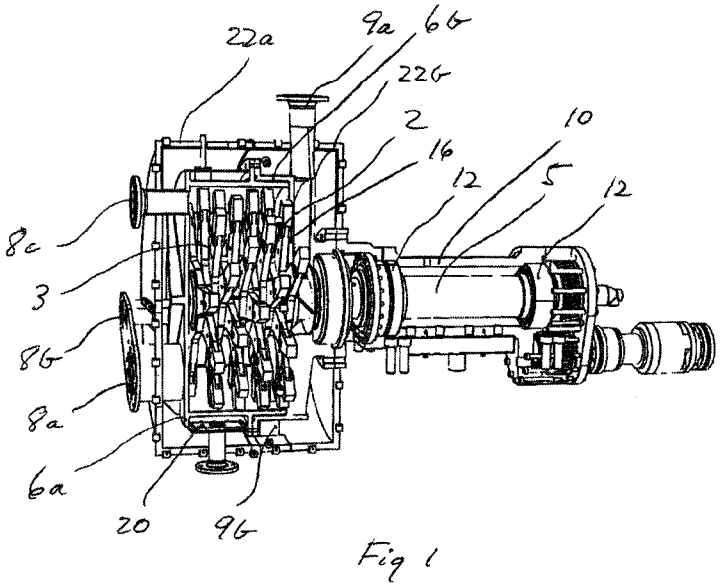

Fig 1

(57) Abstract: The present invention concerns a reactor (1) for the separation of material included in composite raw material and comprising at least one reaction chamber (2) and at least one rotor (3), said reaction chamber (2) comprising at least one housing (6, 6a, 6b) which is sealed in relation to the surroundings and has at least one inlet opening (8a, 8b, 8c) and at least one outlet opening (9a, 9b) and said rotor (3) comprising at least one shaft (5), and at least a first part of said rotor (3) being situated in said housing (6, 6a, 6b) and said shaft (5) extending from said first part through and out of said housing (6, 6a, 6b), said first part of said rotor (3) comprising at least one hammer (4). There is present at least one fan blade (29) positioned directly or indirectly on said shaft (5) and situated near an outlet opening (9a) for gas of said at least one outlet opening (9a, 9b) in said reaction chamber (2), said outlet opening (9a) for gas being situated near at least one shaft seal (24), positioned directly or indirectly on said shaft (5), between said reaction chamber (2) and the surroundings, said fan blade (29) being situated between said shaft seal (24) and the central part of the reactor (1), said fan blade (29) being situated in an inlet (30), which is especially designed for the purpose and located in said reaction chamber (2), into said outlet opening (9a) for gas, said shaft (5) extending in only one direction from said first part through and out of said housing (6, 6a, 6b), and said fan blade (29) being situated at an axial distance from said hammer (4) on said first part of said rotor (3). The present invention also concerns a method of decreasing the amount of solid particles accompanying a gas stream from a reactor (1), and use of the reactor (1).

WO 2014/098747 A1

REACTOR, METHOD OF DECREASING THE AMOUNT OF SOLID PARTICLES IN A GAS STREAM FROM A REACTOR AND USE OF THE REACTOR

The present invention concerns a reactor for the separation of material included in composite raw material and comprising at least one reaction chamber and at least one rotor, said reaction chamber comprising at least one housing which is sealed in relation to the surroundings and has at least one inlet opening and at least one outlet opening and said rotor comprising at least one shaft, and at least a first part of said rotor being situated in said housing and said shaft extending from said first part through and out of said housing, said first part of said rotor comprising at least one hammer. The present invention also concerns a method of decreasing the amount of solid particles accompanying a gas stream from a reactor, and use of the reactor.

Prior Art

SE, C2, 534 399 shows a reactor of the type described by way of introduction. At least a first part of the rotor is situated in the housing and the shaft extends in only one direction from said first part through and out of the housing. However, the construction is not optimum as regards providing conditions for a process having as small an impact on the surrounding environment as possible and having as efficient use of resources as possible.

Summary of the Invention

A first object of the present invention is to provide a reactor that in operation has a smaller amount of solid particles accompanying a gas stream from the reactor than hitherto known reactors of a comparable type. A second object of the present invention is to provide a method of decreasing the amount of solid particles accompanying a gas stream from a reactor. A third object of the present invention is to provide a use of the reactor. Thus, the invention embraces a reactor for the separation of material included in composite raw material and comprising at least one reaction chamber and at least one rotor, said reaction chamber comprising at least one housing which is sealed in relation to the surroundings and has at least one inlet opening and at least one outlet opening and said rotor comprising at least one shaft, and at least a first part of said rotor being situated in

said housing and said shaft extending from said first part through and out of said housing, said first part of said rotor comprising at least one hammer. The reactor has at least one fan blade which is positioned directly or indirectly on said shaft and situated near an outlet opening for gas of said at least one outlet opening in said reaction chamber, said outlet opening for gas being situated near at least one shaft seal, positioned directly or indirectly on said shaft, between said reaction chamber and the surroundings, said fan blade being situated between said shaft seal and the central part of the reactor, said fan blade being situated in an inlet, which is especially designed for the purpose and located in said reaction chamber, into said outlet opening for gas, said shaft extending in only one direction from said first part through and out of said housing, and said fan blade being situated at an axial distance from said hammer on said first part of said rotor.

Said fan blade may be situated in said reaction chamber. Said fan blade may be situated near said at least one outlet opening in said reaction chamber.

Said fan blade may be directed in such a way that it, when said shaft rotates, counteracts the direction of motion of the occurring gas stream out of the reactor, at which particles of solid material accompanying the gas stream are thrown back inward toward the central part of the reactor. Said fan blade may be directed in principally the same direction as an imaginary thread of an imaginary right-threaded screw which is thought to be situated in the centre of said shaft where the same passes said fan blade, and is thought to extend primarily parallel to said shaft and be intended to be screwed inward toward the central part of the reactor. In the operation of the reactor, said shaft may rotate counter-clockwise as seen from said fan blade and inward toward the central part of the reactor. Three fan blades, positioned directly or indirectly on said shaft, may be present.

At least one support device may together act on a part of said shaft situated outside said housing, alternatively on an additional shaft joined to said part, wherein said support device entirely may support the reactor. At least one support device may together act on a part of said shaft situated outside said housing, alternatively on an additional shaft joined to said part, wherein said support device partly may support the reactor. Said shaft may be mounted in bearings in at least two planes extending primarily perpendicular to a principal direction of extension of said shaft, and where said planes are situated outside said housing. Said support device may comprise at least one stand. Said support

device may comprise at least two bearings for the bearing mounting of said shaft in said planes. Said support device may comprise at least one bearing housing.

Said housing may have a primarily cylindrical shape. Said housing may have at least one dismountable part. Said dismountable part may be attached to a remainder of said housing by screw joints and/or bolt joints. Said dismountable part may be internally provided with wear-resistant material.

The remainder of said housing may be attached to at least one of said at least one bearing housing and be supported entirely by this/these. The remainder of said housing may be attached to at least one of said at least one bearing housing and be supported partly by this/these. The remainder of said housing may be attached to at least one of said at least two bearings and be supported entirely by this/these. The remainder of said housing may be attached to at least one of said at least two bearings and be supported partly by this/these. The remainder of said housing may be attached to at least one of said at least one stand and be supported entirely by this/these. The remainder of said housing may be attached to at least one of said at least one stand and be supported partly by this/these.

At least one of said hammers may comprise at least one fixed part and at least one articulated part. Said fixed part may be fixedly attached to said first part of said rotor and said articulated part may be articulately attached to said fixed part. Said articulated part may have a centre of gravity which is lying on a first radius r1 of said rotor at the same time as an axis of rotation for the rotation between said articulated part and said fixed part is lying on a second radius r2 of said rotor, wherein said first radius r1 may be trailing said second radius r2 upon rotation of said rotor in connection with operation of the reactor.

Thus, the invention also embraces a method of decreasing the amount of solid particles accompanying a gas stream from a reactor for the separation of material included in composite raw material, which reactor comprises at least one reaction chamber and at least one rotor, said reaction chamber comprising at least one housing which is sealed in relation to the surroundings and has at least one inlet opening and at least one outlet opening and said rotor comprising at least one shaft, and at least a first part of said rotor being situated in said housing and said shaft extending from said first part through and out of said housing, said first part of said rotor comprising at least one hammer, the method comprising the steps of

– providing said shaft with a fan blade positioned directly or indirectly on said shaft

– placing said fan blade in an inlet, which is especially designed for the purpose and located in said reaction chamber, into an outlet opening for gas of said at least one outlet opening,

– placing said fan blade at an axial distance from said hammer on said first part of said rotor, and

– directing said fan blade so that it, when said shaft rotates, counteracts the direction of motion of the occurring gas stream out of the reactor, in which particles of solid material accompanying the gas stream are thrown back inward toward the central part of the reactor while the rest of the gas stream leaves the reactor through said outlet opening for gas.

Thus, the invention also embraces a use of the reactor according to the above for the separation of material included in composite raw material. The raw material may be tyres for cars and/or other vehicles. The raw material may be plastic. The raw material may be oil. The raw material may be nylon. The raw material may be polyester. The raw material may be digested sludge. The raw material may be wood. The raw material may be slaughterhouse waste. The raw material may be oil plants.

List of Figures

Figure 1 shows, in a partly sectioned perspective view, a reactor according to the invention.

Figure 2 shows, in a partly sectioned side view, a part of the reactor in Figure 1.

Figure 3 shows, in a partly sectioned front view, a housing and a part of a rotor which may be included in the reactor in Figure 1.

Description of Embodiments

In Figures 1 and 2, it is seen how a reactor according to the invention looks. The reactor 1 comprises a reaction chamber 2 and a rotor 3 which is positioned at least partly in the same and has hammers 4 mounted on a rotor shaft 5. The reaction chamber 2 is surrounded by a housing 6 consisting of two parts, *viz*. a first part 6a and a second part 6b. The first part 6a has one or more inlet openings 8a, 8b, 8c for raw material to the reactor and the second part 6b has one or more outlet openings 9a, 9b for products from the reactor. The housing 6, 6a,

6b is primarily cylindrical and the first part 6a as well as the second part 6b is provided with a mating circumferential flange having a first diameter for a common bolt joint.

In an analogous way, in a second end, the second part 6b connects to a bearing housing 10, the second part 6b as well as the bearing housing 10 being provided with a mating circumferential flange having a second diameter for a common bolt joint. The first diameter is greater than the second diameter. The bearing housing 10 is in turn supported by a stand (not shown) and accommodates two bearings 12 for the bearing mounting of the rotor shaft 5 where the same extends outside the reaction chamber 2, i.e., only on one side of the reaction chamber 2, the stand accordingly supporting the entire reactor 1.

A covering (not shown) of a wear-resistant material such as steel or ceramic material is present on the inside of the first part 6a. In the second part 6b, there is present an inner wall 16 – primarily parallel to the primarily circular end surface of the second part 6b and at a certain distance from the same – and which allows gas to pass through the centre of said wall 16 – i.e., between the wall 16 and the rotor shaft 5 – to an inner/rear space in the reaction chamber 2 from where the gas can continue out of the reactor through an outlet opening 9a of said outlet openings 9a, 9b and further to an inlet channel of an eductor (not shown) or a distillation unit (not shown) or a condensation unit (not shown) or directly for combustion in an engine (not shown) or heating system (not shown). Three fan blades 29 are mounted on the shaft 5 and situated in a purpose-made inlet 30 into the outlet opening 9a for gas. The fan blades 29 are directed in such a way that they, when the shaft 5 rotates, counteract the direction of motion of the occurring gas stream out of the reactor 1, in which particles of solid material accompanying the gas stream are thrown back inward toward the central part of the reactor 1. Thus, the fan blades 29 are directed in principally the same direction as an imaginary thread of an imaginary right-threaded screw would be, which screw is thought to be situated in the centre of the shaft 5 where the same passes the fan blades 29, and is thought to extend primarily parallel to the shaft 5 and be intended to be screwed inward toward the central part of the reactor 1. In the operation of the reactor 1, the shaft 5 rotates counter-clockwise as seen from the fan blades 29 and inward toward the central part of the reactor 1. Also the opposite is possible, i.e., that the shaft 5 in the operation of the reactor 1 rotates

clockwise as seen from the fan blades 29 and inward toward the central part of the reactor 1, but if so, the fan blades 29 should be directed in principally the same direction as an imaginary thread of an imaginary left-threaded screw would be, which screw is thought to be situated in the centre of the shaft 5 where the same passes the fan blades 29, and is thought to extend primarily parallel to the shaft 5 and be intended to be screwed inward toward the central part of the reactor 1.

Solid particles may leave the reactor through another outlet opening 9b of said outlet openings 9a, 9b. The reaction chamber 2 is, apart from occurring inlet openings 8a, 8b, 8c, outlet openings 9a, 9b, and a shaft seal 24 at a shaft bushing for the rotor shaft 5, separated from the surroundings, i.e., the housing 6, 6a, 6b and occurring connection to said bearing housing 10 are in other respects to be considered as primarily gas-tight in relation to the surroundings. In this way, the reaction chamber 2 and the reactor 1 differ from usual hammer mills which are more or less open toward the surroundings. The fan blades 29 are situated between the shaft seal 24 and the central part of the reactor 1.

Said shaft seal 24 comprises a fluid channel 25 which, in a first end, is connected to a fluid source (not shown) which provides an inert gas in the form of nitrogen gas or another inert gas. In a second end, the fluid channel 25 is in hydraulic communication with the reaction chamber 2 and is at least partly in the form of a gap located between a first part 26 rotating in the operation of the reactor 1 and a second part 27 non-rotating in the operation of the reactor 1. The first part 26 is here located directly on the shaft 5 and the second part 27 is located radially and axially next to the first part 26. It is, however, fully feasible to have one or more additional parts (not shown) between the first part 26 and the shaft 5. It is also fully feasible to let the first part 26 consist of the proper shaft 5 and with the second part 27 located radially and/or axially next to the shaft 5. The gap is of the labyrinth type. The shaft seal 24 also comprises two gaskets 28 of conventional type in the form of two graphite packings 28. The gap is located between the reaction chamber 2 and the graphite packings 28.

The supplied nitrogen gas maintains a pressure which exceeds the pressure that prevails in the reaction chamber 2 in the operation of the reactor 1, which results in a smaller amount of nitrogen gas continuously passing into the reaction chamber 2 in the operation of the reactor 1. This in turn guarantees that no environmentally detrimental gases penetrate out from the reaction chamber 2 in

the operation of the reactor 1. The smaller amount of nitrogen gas which continuously passes into the reaction chamber 2 has no negative influence on the separation process in the reactor. The penetrating amount of nitrogen gas can be estimated by the formula

q=1.5x10^4xuF(p1/T^(1/2)x(p2/p1)^(1/1.4)x(((1-(p2/p1)^(1/3.5)))^0.5)

whereinq= penetrating amount of nitrogen gas (kg/h)

x=multiplication sign

^=sign of exponent of power

u=a constant which is between 0.62 and 0.98

F=gap area (mm^2)

p1=nitrogen gas pressure (bar)

T=temperature (K)

p2=back-pressure in the reaction chamber 2 (bar)

Example:

If an inner diameter of the second part 27 in the form of an outer ring 27 is 200.2 mm and an outer diameter of the first part 26 in the form of an inner ring 26 is 200.0 mm, F=62.83 is obtained. If u=0.75, p1=1.51, p2=1.50 and T=273, q=6.96 is obtained.

The housing 6, 6a, 6b is in heat exchanging contact with a channel 20 intended to convey gas for heat exchange between the gas and the housing 6, 6a, 6b. The channel 20 surrounds the greater part of the cylindrical outer surface – however not the primarily circular end surface – of the first part 6a of the housing 6, 6a, 6b, an inlet opening for the heat exchanging gas being present in a lower part of the channel 20 and an outlet opening (not shown) for the heat exchanging gas being present in an upper part of the channel 20. It is feasible to correspondingly let the channel 20 entirely or partly surround also the end surface of the first part 6a of the housing 6, 6a, 6b. It is feasible to correspondingly let the channel 20 entirely or partly surround also one or more of the inlet openings 8a, 8b, 8c for the raw material – however primarily the inlet opening 8a for the raw material in the form of tyres and/or plastic and/or oil and/or nylon and/or polyester

and/or digested sludge and/or wood and/or slaughterhouse waste and/or oil plants and/or the like and the inlet opening 8b for sand and/or catalyst and/or the like.

An extra casing 22, 22a, 22b is present around the housing 6, 6a, 6b, also this for practical reasons being divided into a first part 22a and a second part 22b. The casing 22, 22a, 22b is primarily cylindrical and the first part 22a as well as the second part 22b is provided with a mating circumferential flange having a third diameter for a common mechanical joint. The third diameter is greater than the first diameter. Supporting stays (not shown) are present between the casing 22, 22a, 22b and the housing 6, 6a, 6b. In the space between the casing 22, 22a, 22b and the housing 6, 6a, 6b, there is insulating material. The casing 22, 22a, 22b is made from stainless steel but also other suitable metals and/or materials may occur.

The rotor 3 in Figures 1 and 2 has hammers 4 of simpler type. In Figure 3, it is seen how a part of an alternative rotor 3 may look. Here, the rotor shaft 5 is in the same plane provided with six hammers 4 but the number of hammers in the same plane may vary, each hammer 4 consisting of a fixed part 4a and an articulated part 4b. The articulated part 4b is pivoted around an axis 14 which extends primarily parallel to the principal direction of extension of the rotor shaft 5. When the rotor 3 rotates – anti-clockwise in the figure – the articulated part 4b has a centre of gravity 15 which is lying on a first radius r1 of said rotor at the same time as the axis 14 for the rotation between the articulated part 4b and the fixed part 4a is lying on a second radius r2 of said rotor, said first radius r1 trailing said second radius r2 in the rotation, i.e., said first radius r1 forming an angle with said second radius r2. For each hammer, in the direction of rotation, then a force F2 arises which is proportional to

– a mass m of said articulated part 4b of the hammer,

– a perpendicular distance l1 between said first radius r1 and said axis of rotation 14, and

– a speed of rotation v1 squared of said centre of gravity 15, as well as inversely proportional to

– an effective length l2 of the hammer, and

– a radius r1 from the centre of said rotor to said centre of gravity 15.

By the effective length l2 of the hammer, reference is made to a perpendicular distance between the force F2 and said axis of rotation 14. The

force F2 attacks in the central point (the centre of mass) of the material that is accumulated on the hammer and against which the force F2 is to work.

Thus, a desired power per hammer can be calculated and set by predetermining the parameters listed above. Occurring torque will hold each hammer in the predetermined place – against a stop for each hammer (not shown) – by the determined force F2, and if it is exceeded because of too much material being fed into the reactor or because of some heavier impurity having entered into the reactor, the articulated part 4b bends rearward and lets the material pass until equilibrium of forces arises again. This function provides a levelling effect during normal operation and protection against breakdown if, for instance, foreign objects should accompany the material to be processed.

In use of the reactor, raw material is brought in through one or more of occurring inlet openings 8a, 8b, 8c into the reaction chamber 2 where it is decomposed, by the kinetic energy of the hammers 4 of the rotor, as well as by the kinetic energy of particles which are thrown around by the rotary motion of the rotor and by the heat energy that is created by friction between the hammers 4 and parts of the raw material. Inorganic material in the form of sand, catalysts, steel, glass, etc., may be used to increase the friction and thereby the temperature. The inorganic particles affect the decomposition process favourably by the fact that they have a large total contact surface which acts as an efficient heat exchanger against the raw material, as well as a catalyst for the breaking of hydrocarbon polymers and greater hydrocarbon molecules. Hydrocarbon compounds, water, and other organic material are gasified in the device. The centrifugal forces created by the rotor separate the gas from the heavier inorganic materials, the gas part being brought out of the reactor in the centre thereof and the heavier particles can be tapped at the periphery of the reactor and in both cases through occurring outlet openings 9a, 9b.

In use of the reactor, a method is applied of decreasing the amount of solid particles which accompanies the gas stream from the reactor, the method comprising the steps of

– providing the shaft 5 with a fan blade 29 positioned directly or indirectly on the shaft 5,

– placing the fan blade 29 in an inlet 30, which is especially designed for the purpose and located in the reaction chamber 2, into an outlet opening 9a for gas,

– placing the fan blade 29 at an axial distance from a hammer 4 on a first part of the rotor 3, and

– directing the fan blade 29 so that it, when the shaft 5 rotates, counteracts the direction of motion of the occurring gas stream out of the reactor 1, in which particles of solid material accompanying the gas stream are thrown back inward toward the central part of the reactor 1 while the rest of the gas stream leaves the reactor 1 through the outlet opening 9a for gas.

In use of the reactor, there is furthermore applied a method of decreasing leakage of environmentally detrimental gases from the reactor and decreasing in-leakage of gases detrimental to the process in the reactor, the method comprising the steps of

– providing the shaft 5 with a shaft seal, positioned directly or indirectly on the shaft 5, between the reaction chamber 2 and the surroundings, the shaft seal comprising a fluid channel,

– connecting the fluid channel in a first end to a fluid source which provides an inert gas,

– connecting the fluid channel in a second end to the reaction chamber 2, and

– arranging so that the inert gas maintains a pressure which exceeds the pressure that prevails in the reaction chamber 2 in the operation of the reactor 1. The inert gas is nitrogen gas or another inert gas. The fluid channel is at least partly in the form of a gap located between a first part rotating in the operation of the reactor 1 and a second part non-rotating in the operation of the reactor 1. The shaft seal also comprises two gaskets of conventional type in the form of two graphite packings. The gap is located between the reaction chamber 2 and the graphite packings.

The structure of the reactor according to the invention allows operation having less negative impact on the surrounding environment and having more efficient use of resources than what applies to previously known reactors of the corresponding type.

The invention is not limited to the embodiments shown herein, but may be varied within the scope of the subsequent claims.

CLAIMS

1. Reactor (1) for the separation of material included in composite raw material and comprising at least one reaction chamber (2) and at least one rotor (3), said reaction chamber (2) comprising at least one housing (6, 6a, 6b) which is sealed in relation to the surroundings and has at least one inlet opening (8a, 8b, 8c) and at least one outlet opening (9a, 9b) and said rotor (3) comprising at least one shaft (5), and at least a first part of said rotor (3) being situated in said housing (6, 6a, 6b) and said shaft (5) extending from said first part through and out of said housing (6, 6a, 6b), said first part of said rotor (3) comprising at least one hammer (4), **characterized by** at least one fan blade (29) which is positioned directly or indirectly on said shaft (5) and situated near an outlet opening (9a) for gas of said at least one outlet opening (9a, 9b) in said reaction chamber (2), said outlet opening (9a) for gas being situated near at least one shaft seal (24), positioned directly or indirectly on said shaft (5), between said reaction chamber (2) and the surroundings, said fan blade (29) being situated between said shaft seal (24) and the central part of the reactor (1), said fan blade (29) being situated in an inlet (30), which is especially designed for the purpose and located in said reaction chamber (2), into said outlet opening (9a) for gas, said shaft (5) extending in only one direction from said first part through and out of said housing (6, 6a, 6b), and said fan blade (29) being situated at an axial distance from said hammer (4) on said first part of said rotor (3).

2. Reactor (1) according to claim 1, wherein said fan blade (29) is situated in said reaction chamber (2).

3. Reactor (1) according to claim 1, wherein said fan blade (29) is situated near said at least one outlet opening (9a, 9b) in said reaction chamber (2).

4. Reactor (1) according to claim 1, wherein said fan blade (29) is directed so that it, when said shaft (5) rotates, counteracts the direction of motion of the occurring gas stream out of the reactor (1), at which particles of solid material accompanying the gas stream are thrown back inward toward the central part of the reactor (1).

5. Reactor (1) according to claim 1, wherein said fan blade (29) is directed in principally the same direction as an imaginary thread of an imaginary right-threaded screw which is thought to be situated in the centre of said shaft (5) where the same passes said fan blade (29), and is thought to extend primarily parallel to said shaft (5) and be intended to be screwed inward toward the central part of the reactor (1).

6. Reactor (1) according to claim 1, wherein said shaft (5) in the operation of the reactor (1) rotates counter-clockwise as seen from said fan blade (29) and inward toward the central part of the reactor (1).

7. Reactor (1) according to claim 1, wherein three fan blades (29), positioned directly or indirectly on said shaft (5), are present.

8. Reactor (1) according to claim 1, wherein at least one support device (11) together acts on a part of said shaft (5) situated outside said housing (6, 6a, 6b), alternatively on an additional shaft joined to said part, said support device (11) entirely supporting the reactor (1).

9. Reactor (1) according to claim 1, wherein at least one support device (11) together acts on a part of said shaft (5) situated outside said housing (6, 6a, 6b), alternatively on an additional shaft joined to said part, said support device (11) partly supporting the reactor (1).

10. Reactor (1) according to any one of the preceding claims, wherein said shaft (5) is mounted in bearings in at least two planes extending primarily perpendicular to a principal direction of extension of said shaft (5), and where said planes are situated outside said housing (6, 6a, 6b).

11. Reactor (1) according to claim 8 or 9, wherein said support device (11) comprises at least one stand (11).

12. Reactor (1) according to claim 10 when claim 10 depends on claim 8 or 9, wherein said support device (11) comprises at least two bearings (12) for the bearing mounting of said shaft (5) in said planes.

13. Reactor (1) according to claim 8 or 9, wherein said support device (11) comprises at least one bearing housing (10).

14. Reactor (1) according to any one of the preceding claims, wherein said housing (6, 6a, 6b) has primarily a cylindrical shape.

15. Reactor (1) according to any one of the preceding claims, wherein said housing (6, 6a, 6b) has at least one dismountable part (6a).

16. Reactor (1) according to claim 15, wherein said dismountable part (6a) is attached to a remainder (6b) of said housing by screw joints and/or bolt joints.

17. Reactor (1) according to claim 15, wherein said dismountable part (6a) is internally provided with wear-resistant material (13a).

18. Reactor (1) according to any one of claims 16 or 17, wherein the remainder (6b) of said housing is attached to at least one of said at least one bearing housing (10) and is entirely supported by this/these.

19. Reactor (1) according to any one of claims 16 or 17, wherein the remainder (6b) of said housing is attached to at least one of said at least one bearing housing (10) and is partly supported by this/these.

20. Reactor (1) according to any one of claims 16 or 17, wherein the remainder (6b) of said housing is attached to at least one of said at least two bearings (12) and is entirely supported by this/these.

21. Reactor (1) according to any one of claims 16 or 17, wherein the remainder (6b) of said housing is attached to at least one of said at least two bearings (12) and is partly supported by this/these.

22. Reactor (1) according to any one of claims 16 or 17, wherein the remainder (6b) of said housing is attached to at least one of said at least one stand (11) and is entirely supported by this/these.

23. Reactor (1) according to any one of claims 16 or 17, wherein the remainder (6b) of said housing is attached to at least one of said at least one stand (11) and is partly supported by this/these.

24. Reactor (1) according to claim 1, wherein at least one of said hammers (4) comprises at least one fixed part (4a) and at least one articulated part (4b).

25. Reactor (1) according to claim 24, wherein said fixed part (4a) is fixedly attached to said first part of said rotor (3) and said articulated part (4b) is articulately attached to said fixed part (4a).

26. Reactor (1) according to claim 25, wherein said articulated part (4b) has a centre of gravity (15) which is lying on a first radius (r1) of said rotor (3) at the same time as an axis of rotation (14) for the rotation between said articulated part (4b) and said fixed part (4a) is lying on a second radius (r2) of said rotor (3), said first radius (r1) trailing said second radius (r2) upon rotation of said rotor (3) in connection with operation of the reactor (1).

27. Method of decreasing the amount of solid particles accompanying a gas stream from a reactor (1) for the separation of material included in composite raw material, which reactor (1) comprises at least one reaction chamber (2) and at least one rotor (3), said reaction chamber (2) comprising at least one housing (6, 6a, 6b) which is sealed in relation to the surroundings and has at least one inlet opening (8a, 8b, 8c) and at least one outlet opening (9a, 9b) and said rotor (3) comprising at least one shaft (5), and at least a first part of said rotor (3) being situated in said housing (6, 6a, 6b) and said shaft (5) extending from said first part through and out of said housing (6, 6a, 6b), said first part of said rotor (3) comprising at least one hammer (4), the method comprising the steps of
– providing said shaft (5) with a fan blade (29) positioned directly or indirectly on said shaft (5),

– placing said fan blade (29) in an inlet (30), which is especially designed for the purpose and located in said reaction chamber (2), into an outlet opening (9a) for gas of said at least one outlet opening (9a, 9b),

– placing said fan blade (29) at an axial distance from said hammer (4) on said first part of said rotor (3), and

– directing said fan blade (29) in such a way that it, when said shaft (5) rotates, counteracts the direction of motion of the occurring gas stream out of the reactor (1), at which particles of solid material accompanying the gas stream are thrown back inward toward the central part of the reactor (1) while the rest of the gas stream leaves the reactor (1) through said outlet opening (9a) for gas.

28. Use of the reactor (1) according to any one of claims 1–26 for the separation of material included in composite raw material.

29. Use according to claim 28, wherein the raw material consists of tyres for cars and/or other vehicles.

30. Use according to claim 28, wherein the raw material consists of plastic.

31. Use according to claim 28, wherein the raw material consists of oil.

32. Use according to claim 28, wherein the raw material consists of nylon.

33. Use according to claim 28, wherein the raw material consists of polyester.

34. Use according to claim 28, wherein the raw material consists of digested sludge.

35. Use according to claim 28, wherein the raw material consists of wood.

36. Use according to claim 28, wherein the raw material consists of slaughterhouse waste.

37. Use according to claim 28, wherein the raw material consists of oil plants.

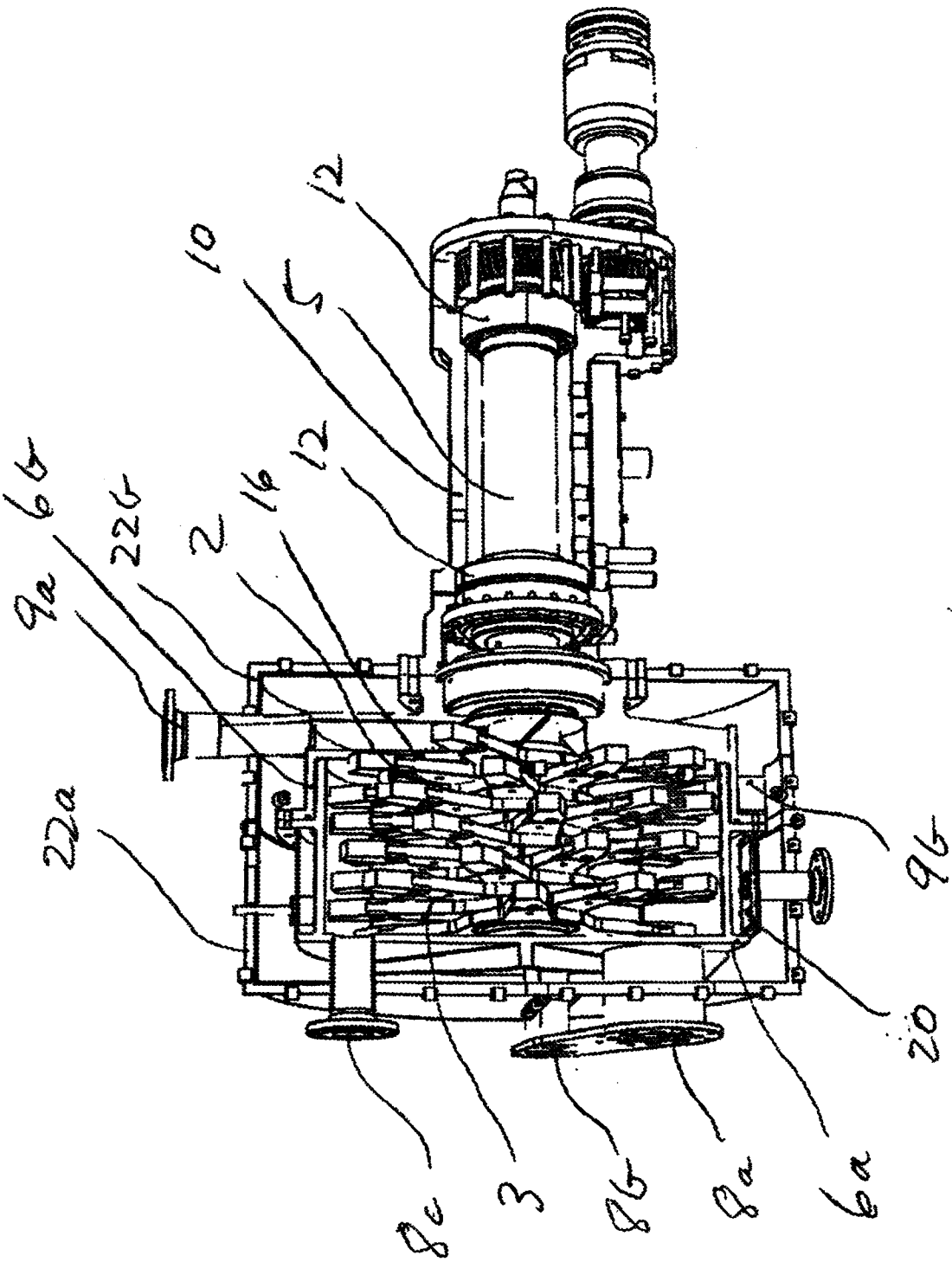

Fig 1

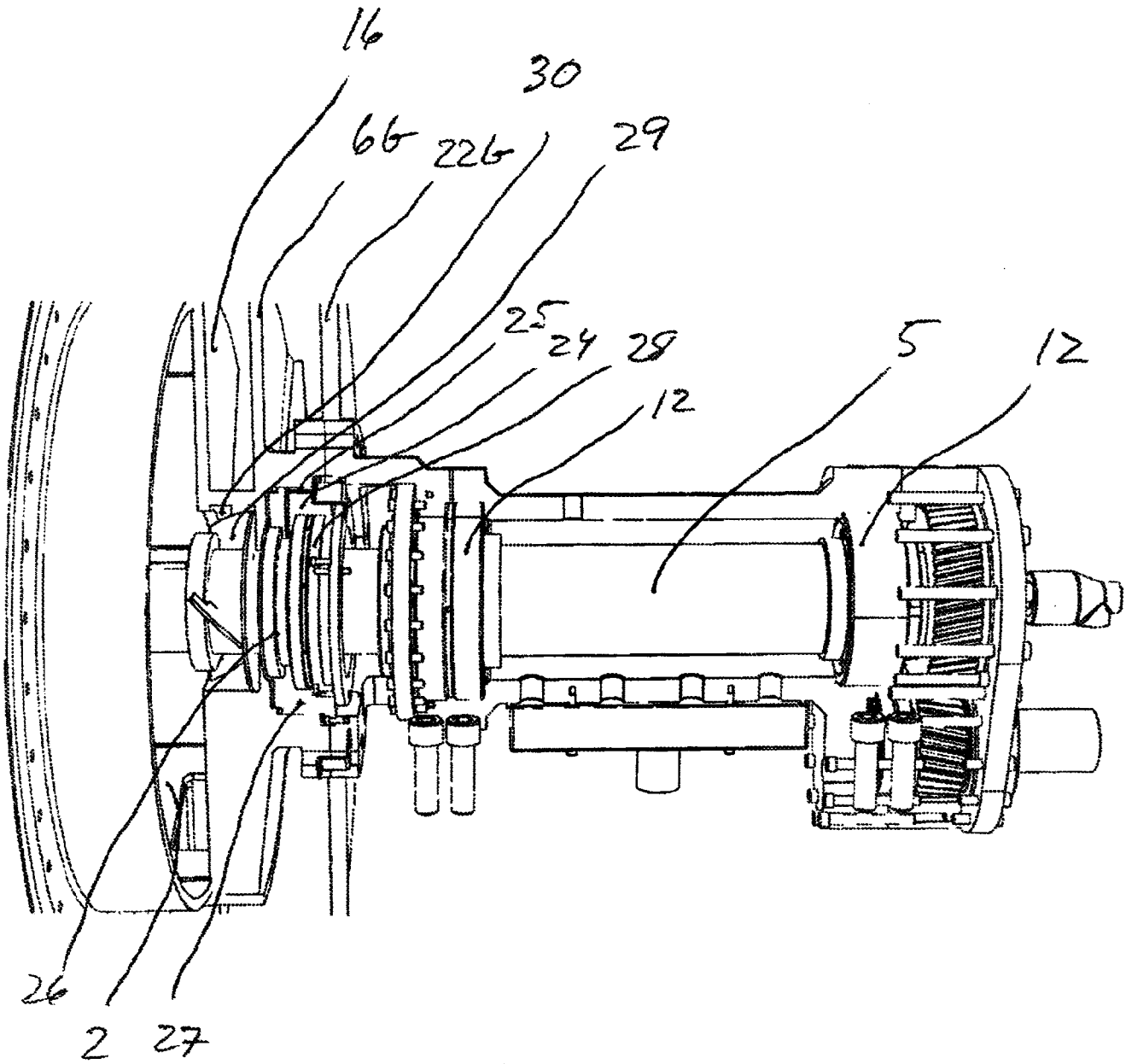

Fig 2

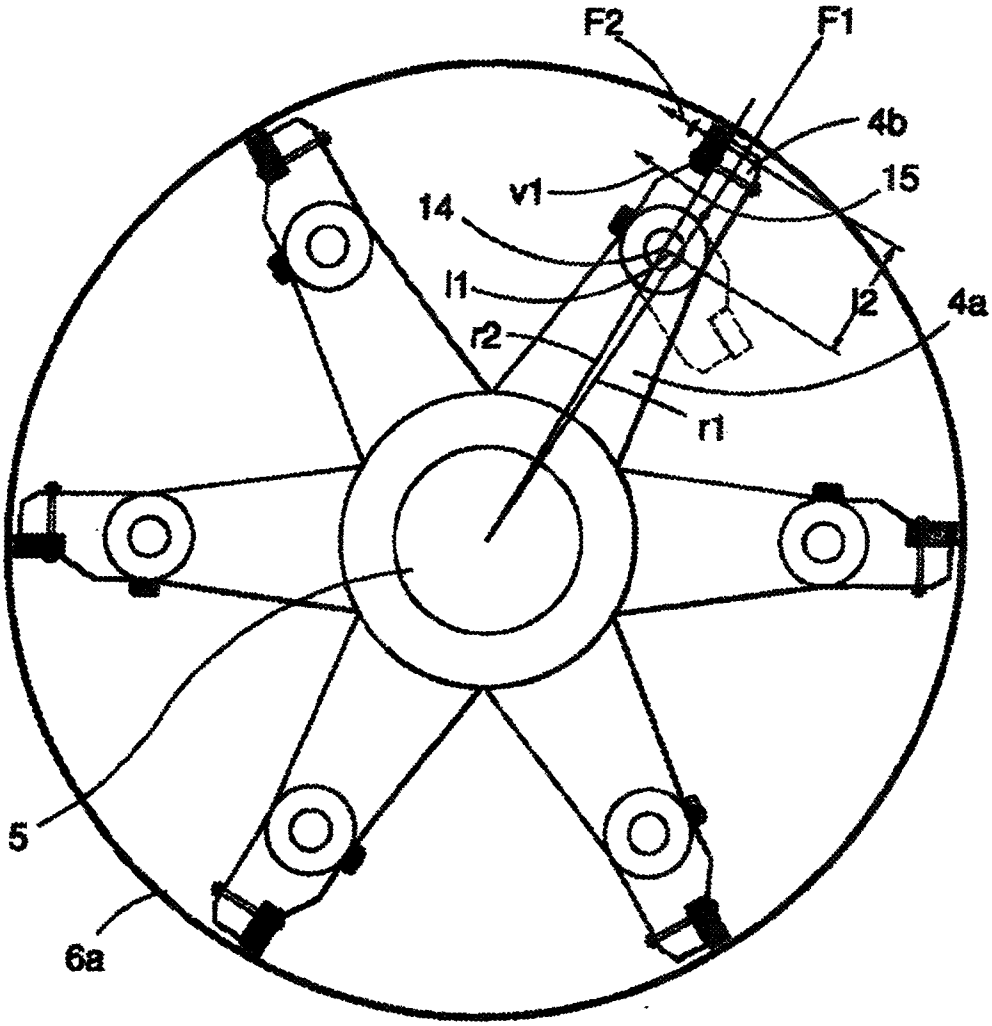

Fig. 3

INTERNATIONAL SEARCH REPORT

International application No.
PCT/SE2013/051543

A. CLASSIFICATION OF SUBJECT MATTER

IPC: see extra sheet

According to International Patent Classification (IPC) or to both national classification and IPC

B. FIELDS SEARCHED

Minimum documentation searched (classification system followed by classification symbols)

IPC: B01J, B02C, B09B, C10J

Documentation searched other than minimum documentation to the extent that such documents are included in the fields searched

SE, DK, FI, NO classes as above

Electronic data base consulted during the international search (name of data base and, where practicable, search terms used)

EPO-Internal, PAJ, WPI data

C. DOCUMENTS CONSIDERED TO BE RELEVANT

Category*	Citation of document, with indication, where appropriate, of the relevant passages	Relevant to claim No.
A	US 3894695 A (BENEDIKTER KARL), 15 July 1975 (1975-07-15); column 3, line 4 - column 3, line 28; figure 1; claim 1 --	1-37
A	DE 4445441 A1 (MITTELDEUTSCHE FEUERUNGS UND U), 27 June 1996 (1996-06-27); column 4, line 2 - column 4, line 35; column 5, line 29 - column 5, line 45; claim 1 --	1-37
A	US 5240188 A (WHITMIRE CLIFTON E), 31 August 1993 (1993-08-31); figure 4 --	1-37
A	SE 534399 C2 (OLSSON ANDERS), 23 June 2011 (2011-06-23); See whole document --	1-37

☒ Further documents are listed in the continuation of Box C. ☒ See patent family annex.

* Special categories of cited documents:

"A" document defining the general state of the art which is not considered to be of particular relevance

"E" earlier application or patent but published on or after the international filing date

"L" document which may throw doubts on priority claim(s) or which is cited to establish the publication date of another citation or other special reason (as specified)

"O" document referring to an oral disclosure, use, exhibition or other means

"P" document published prior to the international filing date but later than the priority date claimed

"T" later document published after the international filing date or priority date and not in conflict with the application but cited to understand the principle or theory underlying the invention

"X" document of particular relevance; the claimed invention cannot be considered novel or cannot be considered to involve an inventive step when the document is taken alone

"Y" document of particular relevance; the claimed invention cannot be considered to involve an inventive step when the document is combined with one or more other such documents, such combination being obvious to a person skilled in the art

"&" document member of the same patent family

Date of the actual completion of the international search	Date of mailing of the international search report
28-03-2014	28-03-2014

Name and mailing address of the ISA/SE
Patent- och registreringsverket
Box 5055
S-102 42 STOCKHOLM
Facsimile No. + 46 8 666 02 86

Authorized officer
Moa Emling

Telephone No. + 46 8 782 25 00

INTERNATIONAL SEARCH REPORT

International application No.
PCT/SE2013/051543

C (Continuation). DOCUMENTS CONSIDERED TO BE RELEVANT

Category*	Citation of document, with indication, where appropriate, of the relevant passages	Relevant to claim No.
A	"A new method of the organic waste treatment, concerning waste oil, mixed plastics waste, oil sludge and PCBs waste processing with simultaneous recovery of hydrocarbons" MAD'AR I, JURIGA M; PETROLEUM AND COAL 2003, vol. 45, nr. 3-4, sidor 187-192; See whole docment -- --------	1-37

International application No.
PCT/SE2013/051543

Continuation of: second sheet

International Patent Classification (IPC)

B01J 19/18 (2006.01)
B02C 13/04 (2006.01)
B09B 3/00 (2006.01)
C10J 3/74 (2006.01)

US	3894695	A	15/07/1975	AT	325396	B	27/10/1975
				BE	817280	A1	04/11/1974
				CA	1042861	A1	21/11/1978
				CH	590691	A5	15/08/1977
				DE	2431387	A1	23/01/1975
				FR	2235736	A1	31/01/1975
				GB	1474550	A	25/05/1977
				IL	45143	A	31/05/1976
				IT	1031018	B	30/04/1979
				JP	50049765	A	02/05/1975
				NL	185002	B	01/08/1989
				NL	7408812	A	07/01/1975
				SE	408376	C	20/09/1979
				SE	7408748	L	07/01/1975
				YU	36875	B	31/08/1984
				YU	185374	A	18/06/1982
				ZA	7404321	A	27/08/1975
DE	4445441	A1	27/06/1996	NONE			
US	5240188	A	31/08/1993	NONE			
SE	534399	C2	23/06/2011	AU	2010334991	A1	05/07/2012
				CA	2784882	A1	30/06/2011
				CN	102753261	A	24/10/2012
				EP	2516051	A1	31/10/2012
				JP	2013514883	A	02/05/2013
				MX	2012007276	A	03/10/2012
				RU	2012127623	A	27/01/2014
				SE	0901600	A1	23/06/2011
				US	20120321531	A1	20/12/2012
				WO	2011078779	A1	30/06/2011