(12) INTERNATIONAL APPLICATION PUBLISHED UNDER THE PATENT COOPERATION TREATY (PCT)

REVISED VERSION

(19) World Intellectual Property Organization
International Bureau

(43) International Publication Date
7 November 2013 (07.11.2013)

WIPO | PCT

(10) International Publication Number
WO 2013/163731 A9

(51) International Patent Classification:
B25B 13/08 (2006.01) *B25B 13/46* (2006.01)
B25B 13/02 (2006.01)

(21) International Application Number:
PCT/CA2013/000423

(22) International Filing Date:
29 April 2013 (29.04.2013)

(25) Filing Language: English

(26) Publication Language: English

(30) Priority Data:
2775551 30 April 2012 (30.04.2012) CA
2806944 19 February 2013 (19.02.2013) CA

(72) Inventor; and
(71) Applicant : **MACDONALD, Jeffrey Dean** [CA/CA]; 765 Beaver Lake Road, Victoria, British Columbia V8Z 6K2 (CA).

(74) Agents: **COOPER, Michael D.** et al.; Thompson Cooper LLP, Suite 201, 1007 Fort Street, Victoria, British Columbia V8V 3K5 (CA).

(81) Designated States *(unless otherwise indicated, for every kind of national protection available)*: AE, AG, AL, AM, AO, AT, AU, AZ, BA, BB, BG, BH, BN, BR, BW, BY, BZ, CA, CH, CL, CN, CO, CR, CU, CZ, DE, DK, DM, DO, DZ, EC, EE, EG, ES, FI, GB, GD, GE, GH, GM, GT, HN, HR, HU, ID, IL, IN, IS, JP, KE, KG, KM, KN, KP, KR, KZ, LA, LC, LK, LR, LS, LT, LU, LY, MA, MD, ME, MG, MK, MN, MW, MX, MY, MZ, NA, NG, NI, NO, NZ, OM, PA, PE, PG, PH, PL, PT, QA, RO, RS, RU, RW, SC, SD, SE, SG, SK, SL, SM, ST, SV, SY, TH, TJ, TM, TN, TR, TT, TZ, UA, UG, US, UZ, VC, VN, ZA, ZM, ZW.

(84) Designated States *(unless otherwise indicated, for every kind of regional protection available)*: ARIPO (BW, GH, GM, KE, LR, LS, MW, MZ, NA, RW, SD, SL, SZ, TZ, UG, ZM, ZW), Eurasian (AM, AZ, BY, KG, KZ, RU, TJ, TM), European (AL, AT, BE, BG, CH, CY, CZ, DE, DK, EE, ES, FI, FR, GB, GR, HR, HU, IE, IS, IT, LT, LU, LV, MC, MK, MT, NL, NO, PL, PT, RO, RS, SE, SI, SK, SM, TR), OAPI (BF, BJ, CF, CG, CI, CM, GA, GN, GQ, GW, ML, MR, NE, SN, TD, TG).

Published:

— *with international search report (Art. 21(3))*

— *before the expiration of the time limit for amending the claims and to be republished in the event of receipt of amendments (Rule 48.2(h))*

(88) Date of publication of the revised international search report:
27 December 2013

[Continued on next page]

(54) Title: OPEN-ENDED RATCHET WRENCH

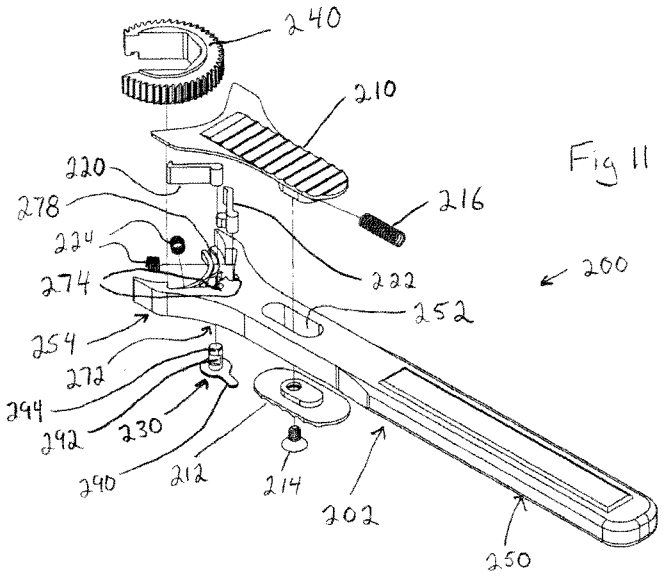

Fig 11

(57) Abstract: An open ended ratchet wrench having interchangeable open ring sockets is presented. The wrench has removeable top plate (210) for replacement of the ring socket (240). The wrench comprises handle (202), the top plate (210), the ring socket (240). The handle comprises bottom plate (254) with groove (278) to hold the ring in a rotatable manner. Ratchet pawls (220, 222) with selective bias mechanism allow for rotation in a selected direction. Selection is performed by lever (230).

WO 2013/163731 A9

(15) **Information about Correction**:
see Notice of 27 December 2013

INTERNATIONAL SEARCH REPORT

International application No.
PCT/CA2013/000423

A. CLASSIFICATION OF SUBJECT MATTER
IPC: ***B25B 13/08*** (2006.01) , ***B25B 13/02*** (2006.01) , ***B25B 13/46*** (2006.01)
According to International Patent Classification (IPC) or to both national classification and IPC

B. FIELDS SEARCHED

Minimum documentation searched (classification system followed by classification symbols)
IPC: ***B25B 13/08*** (2006.01) , ***B25B 13/02*** (2006.01) , ***B25B 13/46*** (2006.01)
EPC: ***B25B 13/46*** B1B

Documentation searched other than minimum documentation to the extent that such documents are included in the fields searched

Electronic database(s) consulted during the international search (name of database(s) and, where practicable, search terms used)
"open ring"

C. DOCUMENTS CONSIDERED TO BE RELEVANT

Category*	Citation of document, with indication, where appropriate, of the relevant passages	Relevant to claim No.
X	US4562757A, 07 January 1986 (07-01-1986) *whole description, associated drawings*	1-3, 5-7, 8 - 13
X	US2006090607A1, 04 May 2006 (04-05-2006) *whole description, associated drawings*	1-4, 5-7, 8-13

[ ] Further documents are listed in the continuation of Box C.

[X] See patent family annex.

* Special categories of cited documents :

"A" document defining the general state of the art which is not considered to be of particular relevance

"E" earlier application or patent but published on or after the international filing date

"L" document which may throw doubts on priority claim(s) or which is cited to establish the publication date of another citation or other special reason (as specified)

"O" document referring to an oral disclosure, use, exhibition or other means

"P" document published prior to the international filing date but later than the priority date claimed

"T" later document published after the international filing date or priority date and not in conflict with the application but cited to understand the principle or theory underlying the invention

"X" document of particular relevance; the claimed invention cannot be considered novel or cannot be considered to involve an inventive step when the document is taken alone

"Y" document of particular relevance; the claimed invention cannot be considered to involve an inventive step when the document is combined with one or more other such documents, such combination being obvious to a person skilled in the art

"&" document member of the same patent family

Date of the actual completion of the international search	Date of mailing of the international search report
23 August 2013 (23-08-2013)	17 October 2013 (17-10-2013)
Name and mailing address of the ISA/CA Canadian Intellectual Property Office Place du Portage I, C114 - 1st Floor, Box PCT 50 Victoria Street Gatineau, Quebec K1A 0C9 Facsimile No.: 001-819-953-2476	Authorized officer Mark Janczarski (819) 953-8842

CORRECTED VERSION

INTERNATIONAL SEARCH REPORT
Information on patent family members

International application No.
PCT/CA2013/000423

Patent Document Cited in Search Report	Publication Date	Patent Family Member(s)	Publication Date
US4562757A	07 January 1986 (07-01-1986)	CA1216180A1	06 January 1987 (06-01-1987)
		EP0122179A2	17 October 1984 (17-10-1984)
		EP0122179A3	22 January 1986 (22-01-1986)
US2006090607A1	04 May 2006 (04-05-2006)	US2006090607A1	04 May 2006 (04-05-2006)
		US7188550B2	13 March 2007 (13-03-2007)