March 5, 1935. W. O. GEYER 1,993,001

CHEMICAL APPARATUS

Original Filed July 13, 1933 2 Sheets-Sheet 1

Fig. 1.

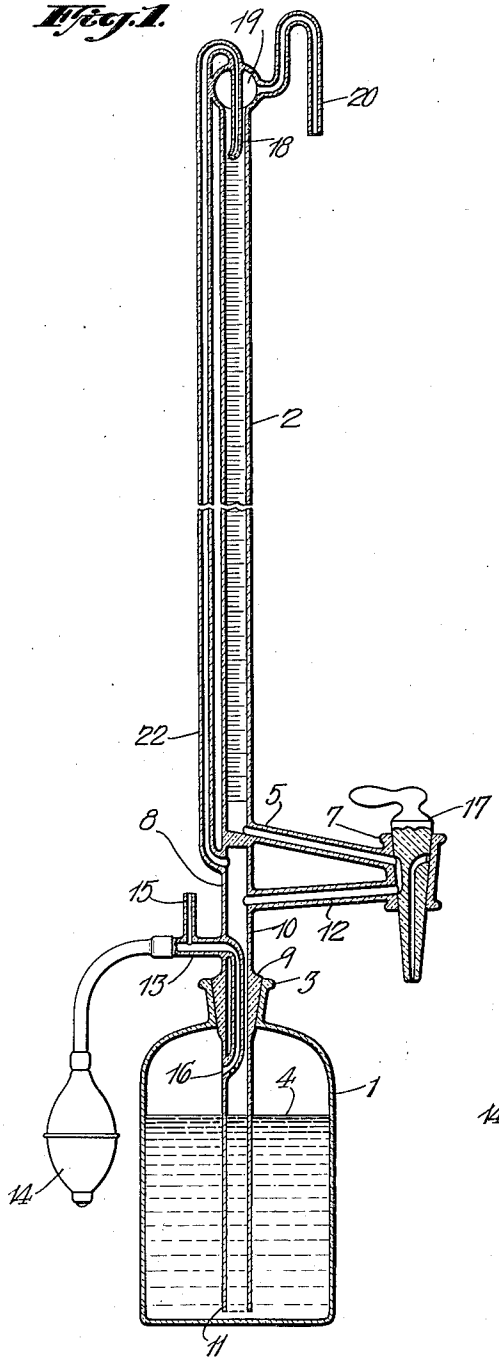

Fig. 2.

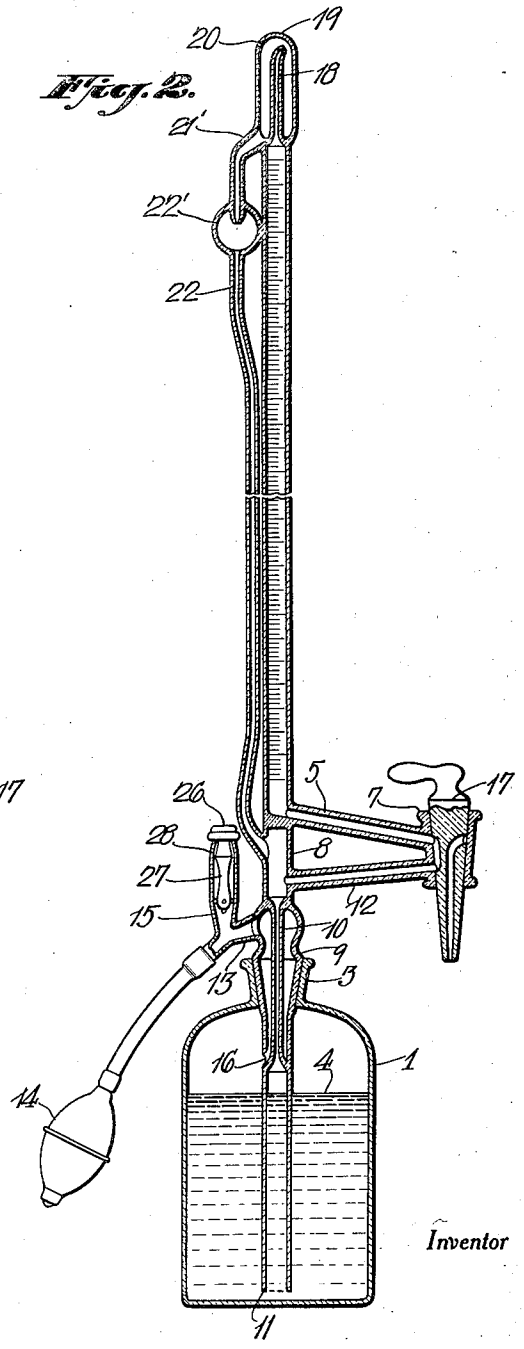

Inventor

WILLIAM O. GEYER.

By

Attorney

March 5, 1935. W. O. GEYER 1,993,001

CHEMICAL APPARATUS

Original Filed July 13, 1933 2 Sheets-Sheet 2

Fig. 3.

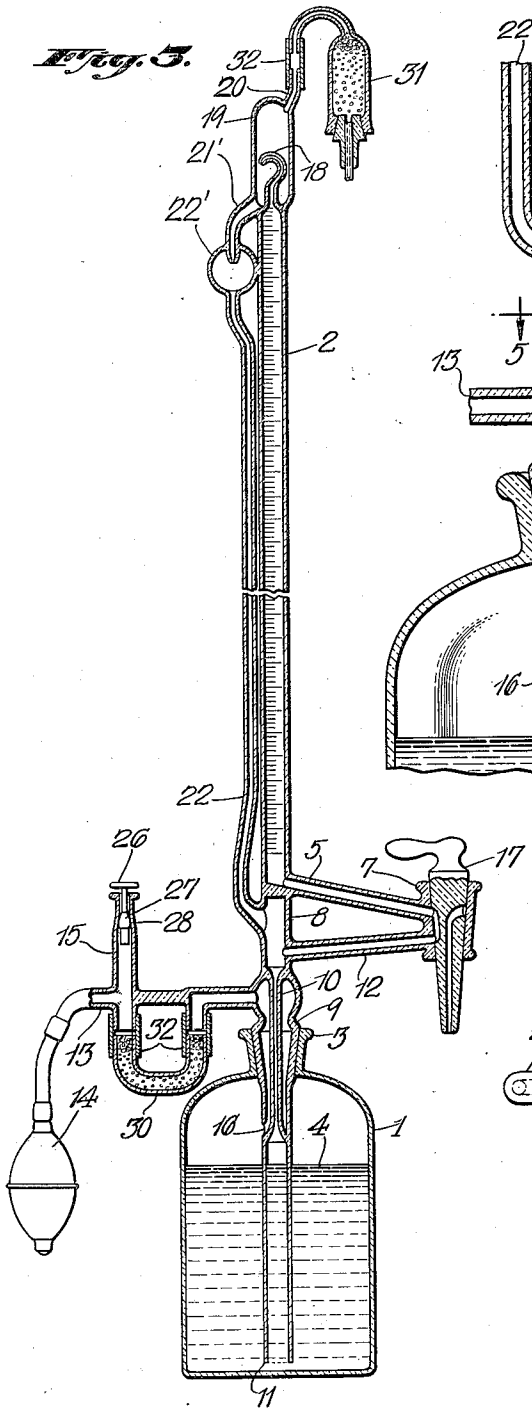

Fig. 4.

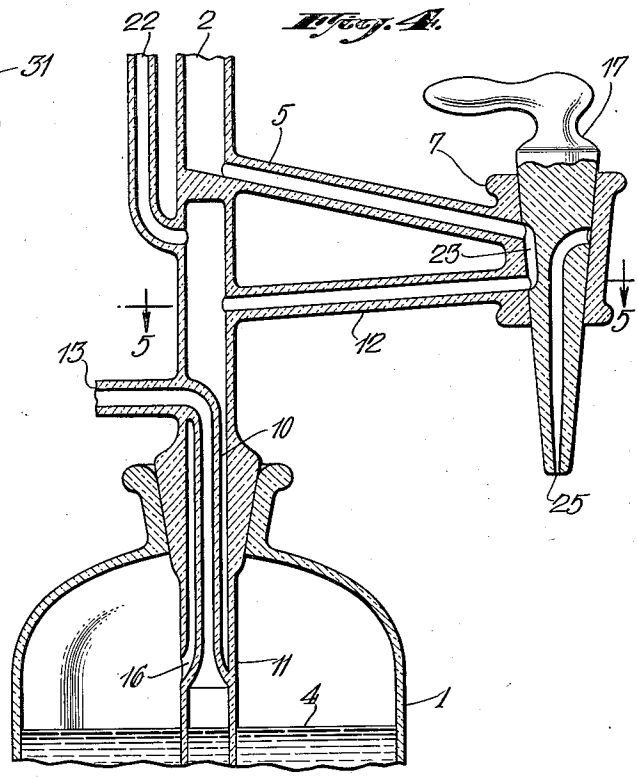

Fig. 5.

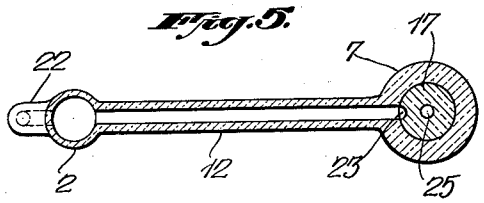

Inventor

WILLIAM O. GEYER.

By Malcolm W. Rich

Attorney

Patented Mar. 5, 1935

1,993,001

UNITED STATES PATENT OFFICE

1,993,001

CHEMICAL APPARATUS

William O. Geyer, Bloomfield, N. J.

Original application July 13, 1933, Serial No. 680,196. Patent No. 1,973,755, dated September 18, 1934. Divided and this application April 7, 1934, Serial No. 719,447

5 Claims. (Cl. 23—259)

This invention relates to chemical apparatus and more particularly to chemical apparatus of the type known in the art as burettes. Still more particularly the present invention relates to burettes known in the art as self or pressure filling burettes. This application is a divisional application of my application Serial No. 680,196 filed July 13, 1933 entitled Chemical apparatus, Patent No. 1,973,755, Sept. 18, 1934.

One of the objects of the present invention is to provide an improved self or pressure filling burette, in which in addition to pressure filling means, liquid leveling means and means to drain said burette into an outside container, means are provided to drain the overflow from the burette back into the fluid source for the burette, and means are provided to return the unused fluid in the burette back to the said source. Another object is to provide a novel stop-cock for use in said burette.

Before further disclosing the nature and scope of the present invention reference should be made to the accompanying drawings, wherein

Fig. 1 is a side elevational view in section of one specific embodiment of the present invention,

Fig. 2 is a side elevational view in section of a second specific embodiment of the present invention,

Fig. 3 is a side elevational view in section of a third specific embodiment of the present invention,

Fig. 4 is an enlarged section of Fig. 1,

Fig. 5 is an enlarged section along plane 5—5 of Fig. 4.

In a burette of the self or pressure filling type it is highly essential that the elements comprising the same be assembled together in a compact unit that may be readily moved about from place to place, and easily taken apart to be cleaned and refilled. Moreover the liquid utilized therein must be stored in a container adapted to be assembled therewith and means must be provided to prevent access thereto of deleterious atmospheric gases and the liquid must also be protected from changes in volume incident to vaporization or absorption of moisture from the atmosphere.

Referring to the modification illustrated in Fig. 1 the burette assembly therein disclosed is comprised essentially of two separable parts, a bottom container part 1 retaining the supply of liquid to be utilized in the upper or burette part 2, supported by and engaging the said bottom part in a substantially hermetic seal.

The bottom container 1 is preferably comprised of glass and is flat-bottomed and bottle-shaped. The neck opening of the bottle container 1 is provided with a ground and tapered stopper opening 3. Liquid 4 to be used in the burette is contained therein. The container 1 with fluid 4 may be hereinafter identified as the fluid or liquid supply source 1.

The burette assembly of elements 2 is provided with a hollow stopper 9 provided with an outer ground and tapered surface adapting the stopper 9 to be engaged in opening 3 of container 1 to form a hermetic seal therewith.

Extending through the hollow stopper 9 is tube 10 which is spaced from the inner face of the hollow stopper 9 a sufficient distance to provide passageway 16 through the stopper 9 into the top of container 1 above the fluid level of liquid 4. The bottom of tube 10 opens into tube 11 extending downwardly a distance adapted to bring the end thereof adjacent the bottom of container 1. The top of tube 10 is sealed through hollow stopper 9 and opens into tube 8. The top of tube 8 is sealed to the bottom of graduated tube 2 with a hermetic joint therebetween. The entire burette assembly of the present invention thereby is carried by stopper 9 engaging in stopper opening 3 of container 1.

To provide for the self or pressure filling of the graduated tube 2, I connect the bottom of the graduated tube 2 to tube 8 through a stop-cock comprising barrel 7 and plug 17 by means of conduit tubes 5 and 12 extending horizontally from the bottom of said tube 2 and from adjacent the bottom of tube 8, which conduit tubes are sealed to the barrel 7 and opening therethrough to the inner tapered seat thereof in spaced relationship in the same vertical plane longitudinal of the barrel 7. Preferably conduit 5 opens into the bottom of tube 2 in substantially the manner shown and is pitched at a slight angle from the horizontal to obtain complete and ready drainage of the tube 2. Stopper 17 is provided with a longitudinally extending groove 23, as will be more fully hereinafter described, adapted to bridge the spacing between the openings of tubes 5 and 12 through barrel 7. The interior of hollow stopper 9 is provided with a tube 13 opening therethrough to the atmosphere, on the end of which tube is attached the pressure applying means comprising compressible bulb 14. On tube 13 I provide a pressure release means which comprises a capillary tube 15 opening from the atmosphere to the interior of tube 13, which may be closed, as by the application thereto of a finger tip while pressure is applied by means 14 and opened by the re-

moval of the finger tip when it is desired to release the pressure as indicated in Fig. 1, or which may be provided with an automatic valve 27, provided with a tapered seat adapted to close the restricted end 28 of tube 15 when pressure is applied by means 14 and releasable by means of a downwardly applied force on cap 26, as may be noted in Figs. 2 and 3.

Upon the application of pressure from means 14 through tube 13, hollow stopper 9, passageway 16 into container 1, upon the liquid level of fluid 4, fluid 4 will be forced upward in tube 11, through tube 10 into tube 8 and thence through conduit 12 through grooved opening 23 into conduit 5 and into graduated tube 2, thereby filling the tube 2.

At the top of tube 2 automatic liquid leveling means 18 is provided which may be any one of the three types shown in Figs. 1, 2 and 3.

In Fig. 1 an overhead automatic liquid leveling means is shown which comprises a capillary tube 18 sealed through the top of chamber 19 inclosing the top of graduated tube 2 and connected by conduit 22 to and opening into tube 8. A vent opening 20 is provided in chamber 19 to maintain atmospheric pressure above the fluid in tube 2. When pressure is applied to the surface of fluid 4, fluid 4 is also forced under pressure from tube 8 into conduit 22 and thence up through capillary tube 18 into the top of tube 2, as well as through conduit 12 through stop-cock plug 17, conduit 5 into tube 2. As the level of fluid 4 in tube 2 rises to near the top of tube 2, stop-cock plug 17 is turned a quarter turn to shut off the flow of fluid 4 into tube 2 therethrough and the filling of the tube 2 is continued from the top through liquid leveling means 18. Any excess fluid rising within chamber 19 may then be drained back into container 1 upon the release of the pressure on fluid 4 and upon the rotation of stop-cock plug 17 back to the position as shown in Fig. 1.

In Fig. 2, I have shown a second type of liquid leveling means in which fluid 4 entering tube 2 through stock-cock plug 17 substantially, as heretofore described with respect to Fig. 1, discharges through the capillary tube 18 into chamber 19 and is drained therefrom by fluid overflow drain conduit 21′ into chamber 22′ which is essentially a check valve in conduit 22 preventing fluid 4 under pressure from entering chamber 19 during the filling of tube 2. Upon the release of pressure fluid 4 in conduit 22, check valve 22′ and chamber 19 automatically drain back into container 1 through tube 8.

The modification illustrated in Fig. 3 operates substantially the same as above described with respect to Fig. 2.

Referring to Figs. 4 and 5 the stop-cock structure of the present invention may be determined. The stop-cock barrel 7 is provided with a pair of conduits 5 and 12 sealed therethrough in longitudinal spaced relation in one quadrant of rotation of stop-cock plug 17. Stop-cock plug 17 is provided with a longitudinal groove 23 in the periphery thereof which is adapted to bridge the openings of conduits 5 and 12 on the inner face of barrel 7.

To provide for the drainage of tube 2 into an outside container stop-cock plug 17 is provided with an axial bore 25 extending from the bottom of the plug 17 towards the top thereof which bore bends angularly toward the plug surface to an opening substantially diametrically opposite the upper end of groove 23 thereby placing it in a position to conduct fluid from tube 2 through conduit 5 and axial bore passageway 25 into an outside container, when the stop-cock plug 17 is rotated 180°.

Preferably the lower opening of axial passageway 25 is made capillary or restricted in size to provide for the more accurate control over the drainage of measured volumes of fluid from graduated tube 2.

In the modification illustrated in Fig. 3 in divisional application the combination of elements of the structure of Figs. 1 and 2 is shown in combination with means to prevent contacting of fluid 4 with deleterious atmospheric gases. This means substantially comprises a U-tube 30 filled with soda-lime or other solid absorption materials through which air under pressure from means 14 must pass before entering container 1. It is preferable to position the pressure release valve 27 ahead of tube 30 substantially as indicated as the maximum pressure will be present at this point. Vent opening 20 also is provided with a tube 31 filled with similar absorption material as tube 30 through which air expelled through or drawn into vent opening 20 must pass. Tubes 30 and 31 are most conveniently attached to tubes 13 and vent opening 20 substantially as in the manner indicated by means of rubber tubing connections 32.

From the above description and drawings it is apparent that the burette structure and the specific stop-cock structure is adapted to modification without departing from the nature and scope thereof, and that various combinations of elements may be utilized in comprising the same. All such modifications and adaptations thereof are contemplated however as may fall within the scope of the following claims.

What I claim is:—

1. A pressure filling burette including in combination, a container for fluid to be used in said burette, a graduated tube vertically supported and carried by said container, a three-way stop-cock, means to apply pressure upon the surface of fluid in said container, means to conduct fluid under pressure through the said stop-cock into said graduated tube, fluid leveling means at the top of said graduated tube, means upon the release of pressure to return fluid from the liquid leveling means and the graduated tube to the said container, and means to drain fluid from the said graduated tube through the said stop-cock into an outside container.

2. In a pressure filling burette, a container for fluid, a graduated tube vertically supported and carried by said container, means to apply pressure upon the surface of fluid in said container, means to conduct said fluid under pressure into said graduated tube, means to automatically adjust the fluid level in said graduated tube, means to return the overflow from said graduated tube back to the said container, and stop-cock provided in one quadrant of rotation with means to drain fluid from the graduated tube back into said container, in a second quadrant provided with means to drain fluid from the graduated tube into an outside container and provided in the third and fourth quadrants with means closing off the means in the two other quadrants.

3. In a pressure filling burette, a unit assembly of elements including a container for fluid, a graduated tube vertically supported and carried by said container, and a three-way stop-cock, said container being provided with means to ap-

ply pressure upon the surface of fluid contained therein, and means to conduct fluid under pressure out of said container, and said graduated tube being provided with means to conduct said fluid under pressure thereinto, liquid leveling means, and means to return the fluid overflow from the top of the graduated tube to the said container, and said stop-cock being provided with means in one quadrant of rotation to drain from the graduated tube back into said container and means in a second quadrant to drain fluid from said graduated tube into an outside container, and means in the third and fourth quadrants to shut off the means of the two other quadrants.

4. In combination a bottle container having a tapered opening, a hollow stopper seated in said opening, a tube sealed through said stopper and extending to adjacent the bottom of said opening, an air passageway opening through said stopper into the top of said container, means to apply a pressure of air through said passageway, a graduated tube closed at the bottom and sealed to and vertically supported by the top of said first tube, automatic fluid leveling means closing the top of said graduated tube, a vented fluid overflow chamber inclosing the top of said graduated tube and said fluid leveling means, a conduit tube to return fluid from said chamber to the said first tube, and a stop-cock provided with means in one quadrant of rotation to conduct fluid under pressure from said first tube into the bottom of said graduated tube, in a second quadrant with means to drain fluid from said graduated tube into an outside container, and in third and fourth quadrants with means to shut off the means of the first two quadrants.

5. In combination, a bottle container having a tapered stopper opening in the top thereof, a stopper sealing said opening, a tube extending through said stopper to adjacent the bottom of said container, an air passageway into the top of said container, means to apply a pressure of air through said passageway upon the surface of fluid in said container, a graduated tube, the bottom of said graduated tube being closed and sealed to the top of said first tube and vertically supported thereby, a conduit tube opening in the bottom of said graduated tube, a second conduit tube opening into said first tube, said conduit tubes extending horizontally in substantially the same vertical plane and the opposite ends thereof being sealed through a stop-cock barrel, a stop-cock plug for said barrel provided in one quadrant of rotation with a longitudinal groove in the surface thereof in a position to bridge said two conduit tubes and an axial bore passageway extending from the bottom thereof towards the top and angularly bending outwardly to the plug surface in a second quadrant at a horizontal level adapting it to align with the conduit tube opening into the bottom of said graduated tube, and means in third and fourth quadrants to shut off said other two quadrants, the top of said graduated tube being provided with means to automatically adjust the fluid level therein and conduit means returning fluid overflow from said top to the said first tube.

WILLIAM O. GEYER.