United States Patent

Swindler

[15] **3,678,972**

[45] **July 25, 1972**

[54] FLUID TRANSFER DEVICE

[72] Inventor: **Henry A. Swindler,** Palo Alto, Calif.

[73] Assignee: **Parker-Hannifin Corporation,** Cleveland, Ohio

[22] Filed: **March 24, 1970**

[21] Appl. No.: **22,201**

[52] **U.S. Cl.** **141/387,** 137/615

[51] **Int. Cl.** **B67d 5/00**

[58] **Field of Search** ..... 137/273–279, 615–616.7; 141/284, 383, 387, 388; 239/165, 166; 212/55; 285/184, DIG. 13

[56] **References Cited**

UNITED STATES PATENTS

3,086,552	4/1963	Ragsdale	141/387 X
3,489,294	1/1970	Greb et al.	212/55 X
3,575,060	4/1971	Warren	285/184 X
2,953,161	9/1960	Muller	137/615

Primary Examiner—Edward J. Earls
Attorney—John N. Wolfram

[57] **ABSTRACT**

A device for transferring two or more different liquids from a bulk supply to a tank truck having a compartment for each liquid. The device includes two or more loading booms, each pivoted at one end for both horizontal and vertical swinging motion. Each boom carries a delivery conduit and a dispensing head for a given liquid. The booms are pivoted at different vertical heights so that one may swing horizontally over the other as necessary for registering any dispensing head with the filler opening for any compartment in the truck. The booms and delivery conduits carried thereby are in telescopic sections so as to be extendible and power operation is provided for extension, horizontal swinging and vertical swinging of each boom. Means is also provided for recovering vapor displaced from the tank truck. The dispensing head is spring loaded into tight sealing engagement with the tank filler opening.

6 Claims, 7 Drawing Figures

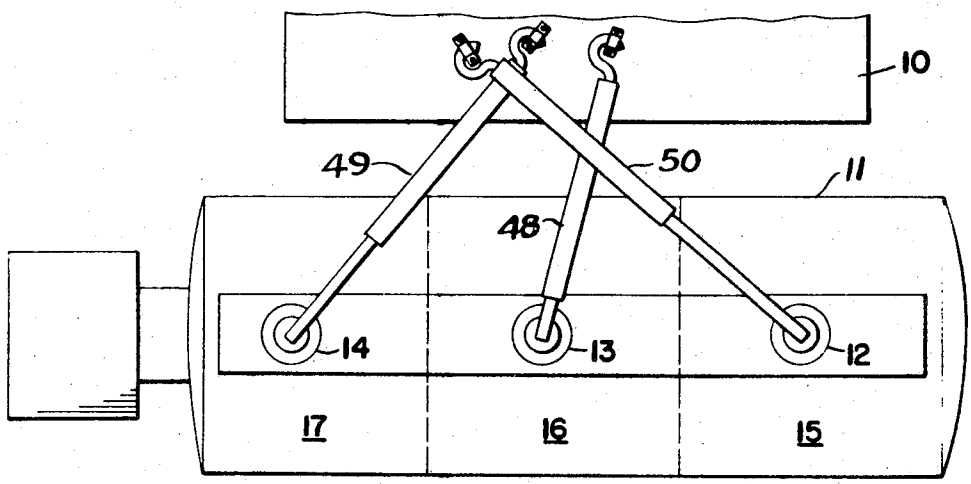

Patented July 25, 1972 3,678,972

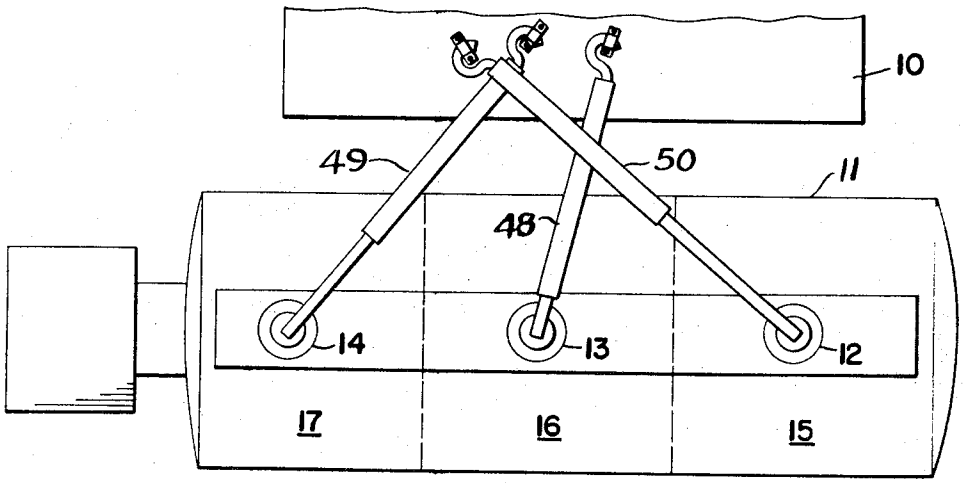

Fig. 1

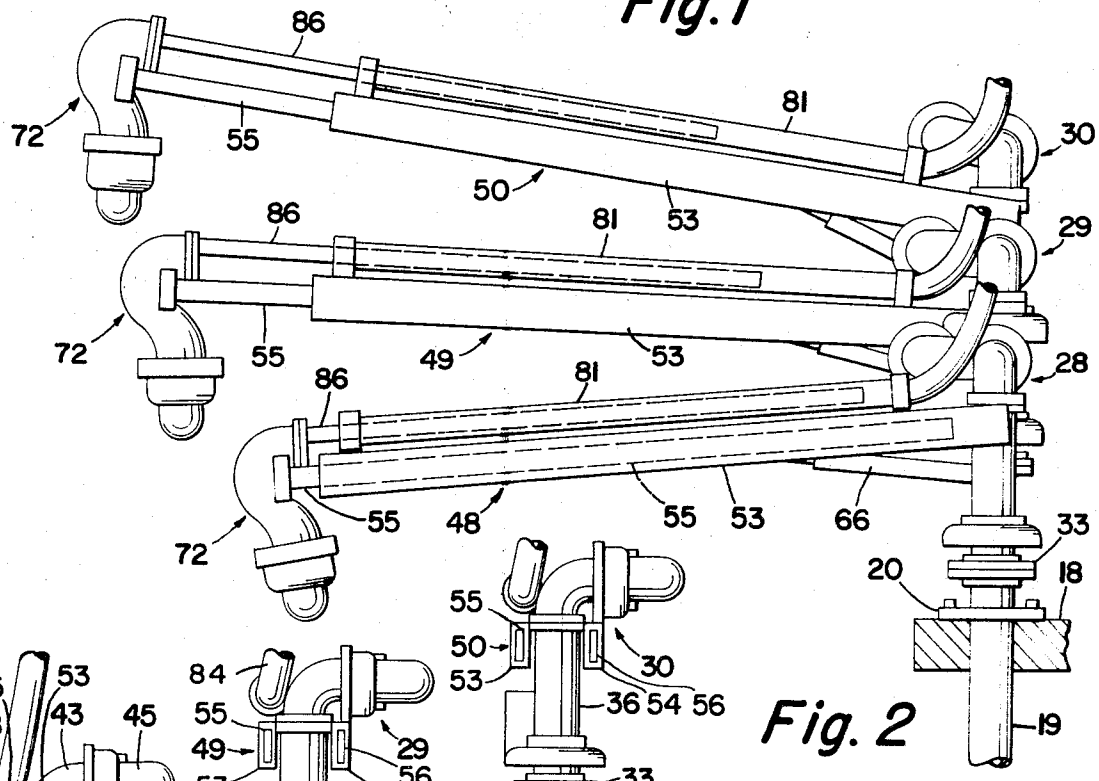

Fig. 2

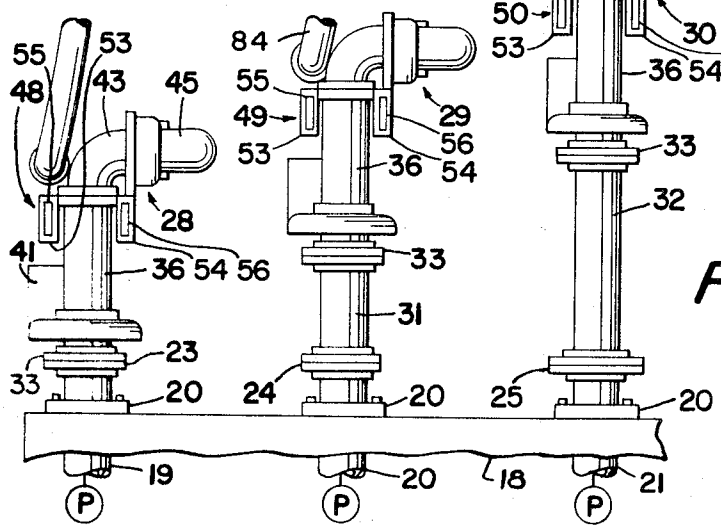

Fig. 3

INVENTOR
HENRY A. SWINDLER
BY
John N. Wolfram
ATTORNEY

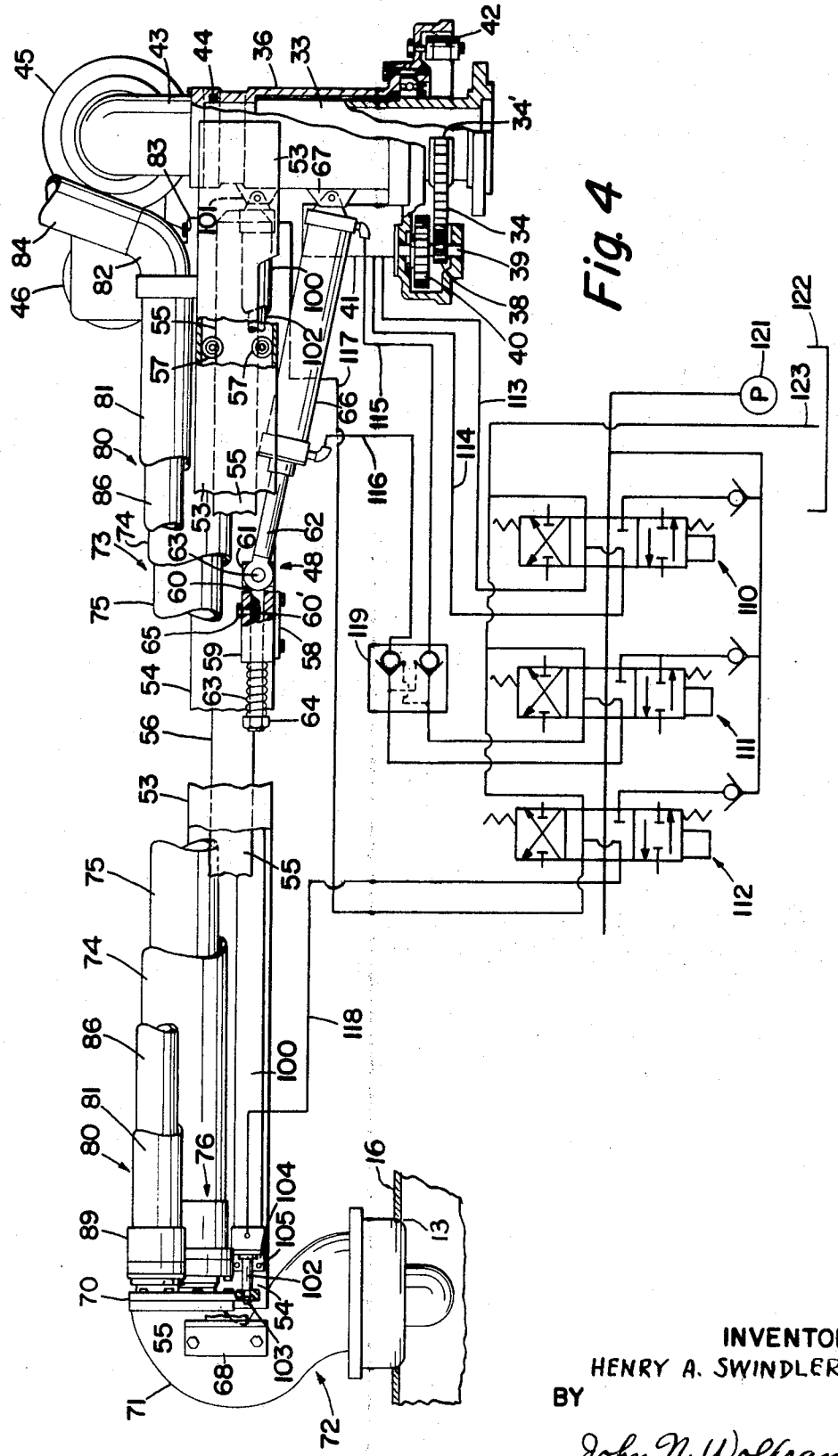

Fig. 4

INVENTOR
HENRY A. SWINDLER
BY
John N. Wolfram
ATTORNEY

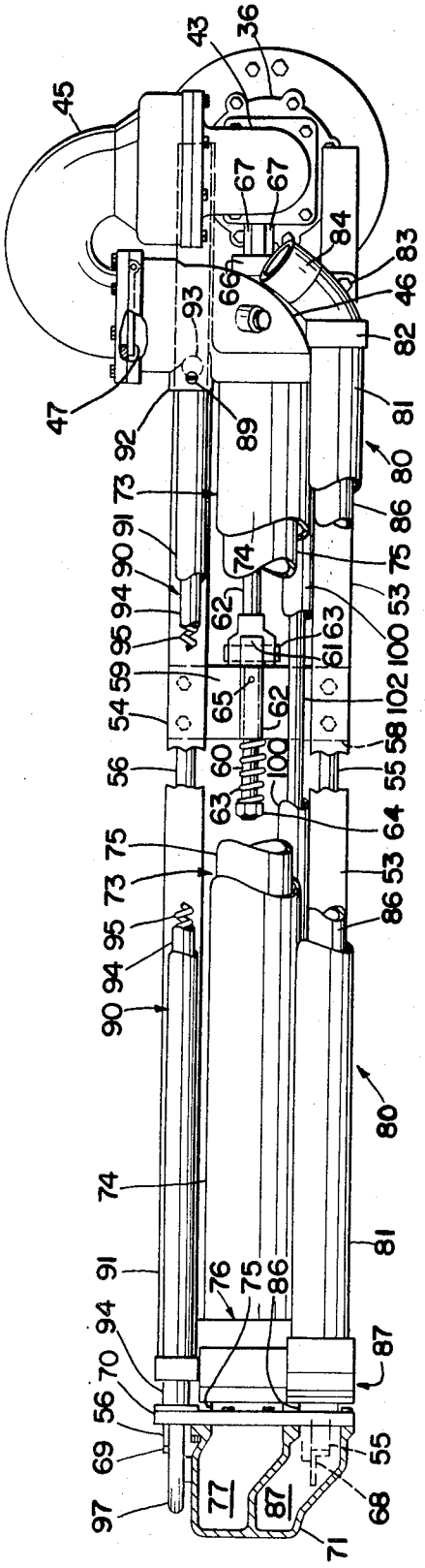

Fig. 5

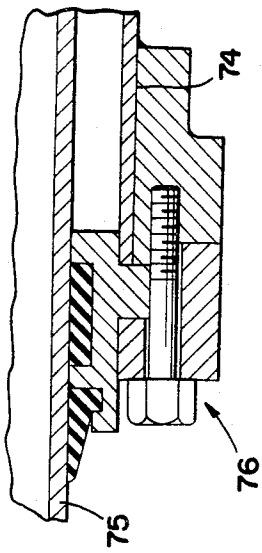

Fig. 7

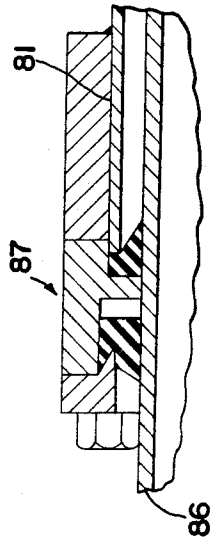

Fig. 6

INVENTOR
HENRY A. SWINDLER
BY
John N. Wolfram
ATTORNEY

FLUID TRANSFER DEVICE

BACKGROUND OF THE INVENTION

Bulk stations for filling tank trucks with gasoline usually carry diesel oil and several grades of gasoline and many tank trucks have two or more compartments for receiving such different liquids. The bulk station usually has overhead delivery conduits projecting side by side from a supporting structure and swivelled for vertical and horizontal pivoting movement to permit the dispensing heads on the conduits to be positioned within the compartment filler openings. When a truck pulls up to a loading platform, the compartments for the different liquids may or may not be opposite the delivery conduit having the same liquid. If the compartments are opposite the proper conduit, the conduits may be positioned for simultaneously filling the corresponding compartment without interference. However, when the compartments are not opposite the proper delivery conduit, the conduits cannot be crossed for reaching the proper compartment because they are pivoted at the same vertical height and only one compartment at a time may be filled.

BRIEF DESCRIPTION OF THE INVENTION

The present invention mounts the side-by-side overhead delivery conduits at different vertical heights so that each delivery conduit may swing horizontally across the others to reach any desired compartment of the tank truck. This is accomplished by providing vertical spacers of different lengths on the supporting structure so that the connection of the conduits, and their supporting boom structure, are vertically spaced from each other at the support structure.

Each delivery conduit is supported by a boom which also carries a vapor recovery conduit. The conduits and the boom have telescoping sections and power operation is provided for vertical, horizontal and telescoping movement of the boom and conduits. Each boom carries a dispensing head with passages connecting separately with the delivery and vapor recovery conduits. A spring maintains the dispensing head in sealed contact with the compartment filler opening.

BRIEF DESCRIPTION OF THE DRAWINGS

FIG. 1 is a view looking down on a tank truck at a loading platform.

FIG. 2 is a side view of three loading booms at one loading station.

FIG. 3 is an end view of the three loading booms shown in FIG. 2.

FIG. 4 is a side view of one loading boom showing the swivel mounting partly in cross section and the dispensing head.

FIG. 5 is a top view of one loading boom.

FIG. 6 is a fragmentary section view of the packing arrangement for the telescoped vapor recovery conduits.

FIG. 7 is a fragmentary section view of the packing arrangement for the telescoped delivery conduits.

DETAILED DESCRIPTION

A bulk depot may have a loading station **10** next to which a tank truck **11** may be positioned for being filled. The truck may have three compartments, **15**, **16** and **17**, each with its own filler opening **12**, **13** and **14**. The loading station may have a support structure **18** to which three supply conduits **19**, **20** and **21** are fixedly secured by flanges **20**. The supply conduits are connected to a respective pump P for delivering a particular liquid thereto from underground storage tanks, not shown.

The supply conduits are connected to respective flange fittings **23**, **24** and **25** to which a respective swivel assembly **28**, **29** or **30** is attached. Swivel assembly **28** is attached directly to flange fitting **23** while assemblies **29** and **30** are attached to flanges **24**, **25** via intermediate spacer conduits **31** and **32**.

Each swivel assembly includes a sleeve **33** rigidly and non-rotatably attached to the respective flange **23** or spacer **31**, **32**. As shown in FIG. **4**, each sleeve **33** has a semi-circular gear segment **34** welded thereto and is within a tubular housing **36** that is rotatable thereon. Gear segment **34** meshes with gear **38** keyed to a shaft **39** which in turn is keyed to a gear **40**. The latter meshes with a gear on the output shaft of a reversible rotary hydraulic motor **41**. Bumper **42** fixed to housing **36** engages radial surfaces **34'** on diametrically opposite sides of gear segment **34** to limit rotation of housing **36** in either direction on sleeve **33**.

The upper end of housing **36** is rigidly and non-rotatably attached to an elbow fitting **43** that is sealed relative to sleeve **33** by packing **44** and has its upper end mounted within one end of a U-shaped swivel fitting **45** rotatable thereon. The other end of swivel **45** is rigidly attached to an elbow fitting **46**. The latter carries a spring closed swing check element **47**, as shown in FIG. **5**.

Each swivel assembly **28**, **29** and **30** is connected to a respective boom assembly **48**, **49** and **50**. The boom assemblies are identical and each has a telescoping frame structure comprising a pair of frame rails **53**, **54** of hollow rectangular cross section and having mounted therein extender rails **55**, **56** also of hollow rectangular cross section. A series of rollers **57** support the extender rails **55**, **56** for telescopic movement within frame rails **53**, **54**. Frame rails **53**, **54** are joined by a plate **58** bolted thereto and which carries an anchor block **59**. A bolt **60** is slidably mounted within the anchor block and has a head **61** at one end to which a cylinder rod **62** is attached by means of pin **63**. The other end of bolt **60** projects from anchor block **59** and has a heavy spring **63** secured thereon by a nut **64**. A setscrew **65** projects into an elongated slot **60'** in bolt **60** to keep the latter from rotating.

Piston rod **62** is part of a fluid motor **66** that is pinned to a pair of brackets **67** rigidly attached to swivel housing **36**.

The outer ends of extender rails **55**, **56** are rigidly attached to brackets **68**, **69** that are attached to the upper housing **71** of dispensing head **72**.

A telescopic delivery conduit **73** has a radially outer section **74** connected to elbow **46** and has a radially inner section **75** slidable within and sealed relative to outer conduit **74** by a packing assembly **76**, shown in FIG. **7**. Inner delivery conduit **75** is welded to a flange **70** that is bolted to housing **71** and communicates with passage **77** therein.

A vapor recovery conduit **80** has a radially outer section **81** connected to an elbow fitting **82** that is rigidly attached to frame rail **53** by screws **83** passing thru a lug on the elbow fitting and which connects to a flexible hose **84** that leads to a vapor storage chamber, not shown. Vapor recovery conduit **80** includes a radially inner conduit **86** telescoped within radially outer conduit **81** and sealed relative thereto by packing assembly **87**, shown in FIG. **6**. Inner vapor conduit **86** is welded to flange **76** and communicates with passage **87** in dispenser head housing **71**.

An electrical conduit **90** has a radially outer section **91** slipped into boss **92** on elbow fitting **46** and retained therein by a setscrew **89**. Boss **92** communicates with an exterior opening **93** and is not in communication with the interior of elbow **46**.

Mounted telescopically within outer section **91** is a radially inner electrical conduit **94** that is rigidly connected to flange **76**. A coiled electrical cord **95** passes through conduit **90** and exits at one end through opening **93** and passes through flange **76** into an elbow fitting **97** and passes into head assembly **72** where it connects with a float operated switch, not shown, which opens to shutoff delivery pump P when the tank compartment is full.

A hydraulic extending cylinder **100** is pinned at one end to a pair of brackets **101** on swivel housing **36** and has its piston rod **102** secured to flange **76** by a nut **103**. One end of cylinder **100** is connected by means of a bracket **104** and bolts **105** to frame rail **54**.

Hydraulic control valves **110**, **111** and **112** are respectively connected to motor **41** by lines **113**, **114**, to cylinder **66** by lines **115**, **116**, and cylinder **100** by lines **117**, **118**. The valves are supplied with hydraulic fluid by a pump **121** and reservoir **122**. There is a return line **123** from the valves to the reservoir. There is a separate set of such valves for each boom assembly. As shown in FIG. **4**, the flow arrangement for each set of valves is such that all the valves in the set may be operated either separately or simultaneously with either or both the other valves.

In operation, each boom assembly **48**, **49**, **50** may have its respective supply conduit **19**, **20** and **21** connected to supplies of differing liquids. When a tank truck **11** is moved into position next to loading station **10** it may be that compartment **15** is to receive the liquid dispensed by loading boom **50**, compartment **16** the liquid dispensed by loading boom **48**, and compartment **17** by liquid dispensed from loading boom **49**. In such case, the corresponding valve **110** is manipulated for operating rotary motor **41** to turn gear **40** which causes gear **38** to turn on gear segment **34** and thus rotate swivel housing **36** on sleeve **33** to swing boom **48** horizontally until it is directed toward filler opening **13**. At the same time, or separately, valves **111** and **112** are manipulated for operating extending cylinder **110** to position the dispense head **72** on boom **48** over filler opening **13** and to operate cylinder **66** to lower dispensing head **72** into sealed contact with filler opening **13**.

Valves **110**, **111** and **112** are spring returned to neutral when released by the operator. In neutral, each valve connects opposite sides of the respective motor or cylinder to return line **123**. When cylinder **66** lowers its boom so that the corresponding head **72** is pressed against a tank filler opening, bolt **60** moves rightwardly within block **69** to compress spring **63** as shown in FIG. **4**. Upon release of valve **112** by the operator and its return to neutral load lock valve **119** locks piston **62** in the set position. The compressed spring **63** then maintains seating pressure on head **72** against the tank opening to allow for settling of the tank truck when the load on the truck springs increases as the tank is being filled.

The corresponding valves **110**, **111** and **112** for booms **49** and **50** are similarly manipulated to place the dispenser head **72** thereon into sealed engagement with filler openings **14** and **12**. Because of the vertical spacing of booms **48**, **49** and **50** by means of spacer conduits **31** and **32**, the booms may cross over each other as shown in FIG. **1** without interference. To disengage the dispenser head from the tank truck and to return the booms to raised, retracted and straight out positions, the corresponding valves **110**, **111** and **112** are manipulated for reversing the flow of hydraulic fluid to the respective cylinders and rotary hydraulic motor.

When cylinder **100** is operated for extending piston rod **102**, the latter, because of its connection to flange **76**, moves the corresponding dispenser head **72** in a direction away from the corresponding swivel housing **36**. This causes the corresponding extender rails **55**, **56** to move telescopically outwardly of corresponding frame rails **53**, **54** and likewise causes the corresponding inner delivery conduit **75**, inner vapor conduit **86** and inner electrical conduit **94** to move telescopically outwardly of the respective outer delivery conduit **74**, outer vapor conduit **81** and outer electrical conduit **91**.

I claim:

1. A tank filling device comprising a support means, a loading boom assembly connected at one end to the support means, the boom assembly including a support frame and a delivery conduit, the delivery conduit comprising a pair of telescoped tubular sections, one of said sections being secured to said support frame, means for moving the telescoped tubular sections axially of each other, said moving means comprising a fluid pressure motor pivotally attached at one end to said support means and attached at its other end to the other of said tubular sections, said support frame including a pair of telescoped sections, said one tubular section being secured to one of said frame sections and the other tubular section being secured to the other of said frame sections whereby said frame sections undergo axial movement relative to each other coincident with the relative axial movement of the tubular sections.

2. A loading device comprising a boom assembly pivoted at one end to a support and having a dispensing head at its other end, actuating means operable for lowering said other end to cause said dispensing head to seat against a filler opening of a tank, yieldable means engaging the actuating means and movable thereby to an energy storing position when said dispensing head engages the filler opening to stop the lowering motion of the boom assembly, means to lock the actuating means in a fixed position upon discontinuance of operation of the same, said yieldable means engaging the boom assembly to cause the latter to maintain a seating pressure of the dispensing head against the filler opening.

3. The device of claim **2** in which said actuating means comprises a hydraulic cylinder.

4. The device of claim **3** in which said cylinder includes a piston, said yieldable means includes a bolt slidably mounted on said boom and a spring engaging one end of the bolt to urge it in one direction and also engaging said boom to urge the boom in a lowering direction, the other end of the bolt being connected to the piston and also being engageable with the boom assembly to urge the latter in a raising direction.

5. The device of claim **2** in which said yieldable means is extensible to move the boom assembly and the dispensing head to a lower position in the event said filler opening assumes a lower position after operation of said actuating means is discontinued and thereby to maintain the dispensing head seated against the filler opening.

6. A tank filling device comprising first and second vertically extending stationary fluid supply pipes, a first stationary fitting rigidly connected to the upper end of the first pipe and a second stationary fitting being rigidly connected to the upper end of the second pipe, said fittings being in substantially the same horizontal plane, first and second generally horizontally extending delivery conduits, a support frame attached to each delivery conduit and extending axially therealong for substantially the full length of the respective delivery conduit, a first swivel means connected to one end of the first delivery conduit and directly connected to the first fitting to permit pivoted horizontal movement of the first delivery conduit relative to the first supply pipe, a second swivel means connected to one end of the second conduit, a spacer conduit rigidly connected to the second fitting and projecting upwardly therefrom, said second swivel means being connected to the upper end of the spacer conduit to permit pivotal horizontal movement of the second delivery conduit and its support frame relative to the second supply pipe, said frames and delivery conduits each being formed of sections axially moveable relative to each other, hydraulic motor means connected to the respective first and second swivel means and to the respective first and second conduits for moving said sections axially relative to each other, said spacer conduit being of sufficient length whereby the second delivery conduit and its support frame when pivoting horizontally may pass over the first delivery conduit and its support frame.

* * * * *