July 19, 1955 E. A. TAVARES 2,713,396

NOVEL, SMALL, EXTENDED LOW FREQUENCY RESPONSE, LOUDSPEAKER ENCLOSURE

Filed May 24, 1950

Fig. 1.

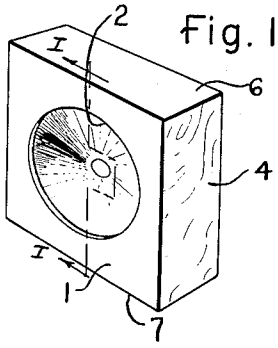

Fig. 2.

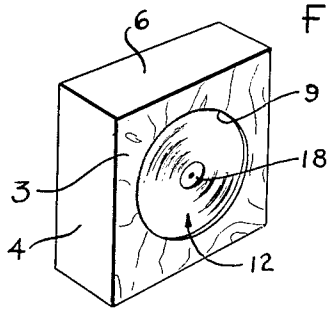

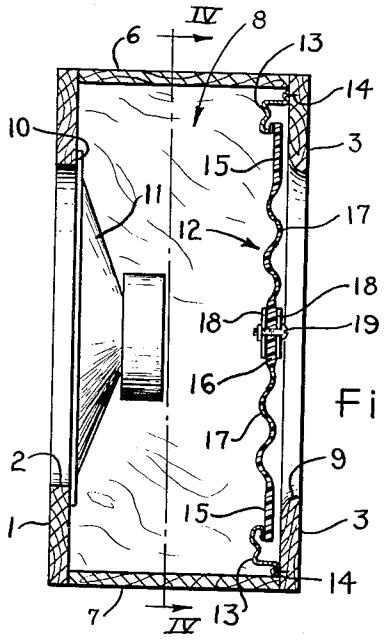

Fig. 3.

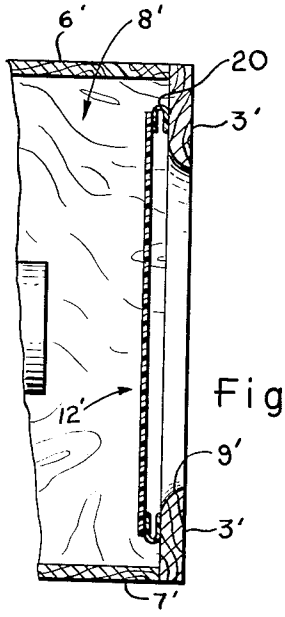

Fig. 5.

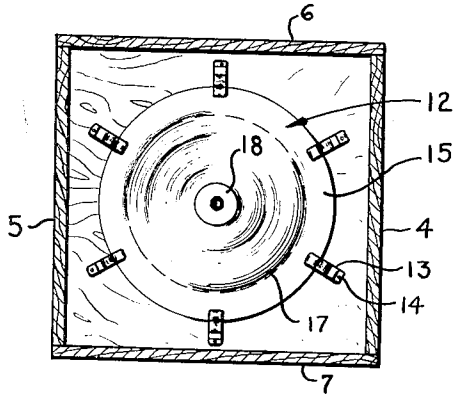

Fig. 4.

INVENTOR

Ernest A. Tavares

BY R. W. Hodgson

AGENT

United States Patent Office

2,713,396

Patented July 19, 1955

2,713,396

NOVEL, SMALL, EXTENDED LOW FREQUENCY RESPONSE, LOUDSPEAKER ENCLOSURE

Ernest A. Tavares, North Hollywood, Calif.

Application May 24, 1950, Serial No. 163,994

10 Claims. (Cl. 181—31)

Generally speaking, the present invention relates to the sound reproduction art. More specifically, it relates to a novel, small loudspeaker enclosure arranged and so related to a loudspeaker as to greatly extend the low frequency range of useful acoustic radiation therefrom into a listening region.

A great many prior art sound reproducing arrangements have been developed, including a number of different types of speakers and a number of different types of speaker enclosures. However, most such prior art speakers and/or speaker enclosures are incapable of radiating any substantial amount of usable acoustic power in the very low frequency range. This is true for several reasons. The first and major reason arises from the fact that the vibrating loudspeaker cone, customarily used as the sound reproducer, has a front and a back surface, and acoustic radiation from the front surface of said cone is one hundred eighty degrees (180°) out of phase with respect to acoustic radiation from the back surface thereof. This one hundred eighty degree (180°) phase difference between the front acoustic radiation and the back acoustic radiation is relatively unimportant at high frequencies, since a very small baffle interposed between the front and back radiation, in a manner such as to cause the back radiation to travel a slightly longer distance than the front radiation (or vice versa) before combining therewith, will cause the one hundred eighty degree (180°) phase difference to be completely nullified and the front and back radiation to reinforce each other.

However, in the lower frequency range, this one hundred eighty degree (180°) phase difference between the front and back acoustic radiation becomes important and leads to serious loss of useful low frequency acoustic output power because of cancellation occurring when the out of phase front and back radiation combines between the loudspeaker and the listening region. This can be prevented only by the use of very large baffles effectively separating the front and back radiation and causing the back radiation to travel a considerable longer path than the front radiation (or vice versa) before combining therewith. The additional length of travel required for the back radiation being half a wave length or an odd multiple thereof so as to cause the front and back acoustic radiation to be additive and reinforce each other. It will be understood that, since at very low frequencies half an acoustic wave length will be quite long, the baffles which must be used in such a system, if the useful low frequency output is to be good, will be very large. This size requirement, which cannot be met in most cases, for practical reasons, is the major reason why most prior art sound reproducing systems do not radiate substantial useful quantities of low frequency acoustic radiation.

Various prior art attempts have been made to at least partially solve this problem. For example, what amounts to a baffle of infinite size can be attained by mounting a loudspeaker cone in a wall with the front surface of said cone facing into a room which will be the listening

region, and with the back surface thereof facing into an entirely separate room (which may also be used as a listening region, if desired). Since the room into which the front acoustic radiation is directed is entirely separated from the room into which the back acoustic radiation is directed, said front and back acoustic radiation will never meet and any phase difference therebetween will consequently be unimportant, since no cancellation of low frequency acoustic radiation can occur unless the front and back accoustic radiation combine while phase differences exist. However, it will be readily understood that such a method of eliminating low frequency front and back acoustic radiation phase cancellation is not practical in most cases, since it requires a permanent installation in a wall, whereas the vast majority of sound reproducing systems are mounted in portable cabinets and the like, so that they can be moved at will. Furthermore, a considerable effective acoustic power loss occurs because only the front acoustic radiation is actually directed into the listening region. This is not so important at medium or high frequencies, but the loudspeaker itself has an attenuated output at low frequencies and, with one half of the output (the rear acoustic radiation) not being used, little useful low frequency acoustic radiation will be directed into the listening region.

Another prior art attempt to eliminate the hereinabove mentioned low frequency front and back acoustic radiation phase cancellation and consequent useful low frequency acoustic output attenuation has been to mount the loudspeaker cone in one wall of a tightly closed, sealed and rigid box, chamber, or container, wtih the front of the loudspeaker cone facing into the listening region and the back of the loudspeaker cone facing into the closed box. With such an arrangement, the back acoustic radiation will be directed into the sealed rigid box, and, therefore, cannot combine with the front acoustic radiation directed into the listening region, and, consequently, no low frequency phase cancellation will occur. This arrangement also effectively amounts to an infinite baffle.

While this arrangement has advantages over the hereinabove mentioned wall mounting type of infinite baffle arrangement because the loudspeaker is positioned in a portable box, chamber or the like, it has serious disadvantages of its own which more than compensate for the portability of the arrangement. The major one of these disadvantages arises from the fact that the air contained within the box and in contact with the rear of the loudspeaker cone and into which the rear acoustic radiation is directed, is virtually sealed therein and has an effective compliance determined largely by the volume of the air contained within the box. This compliance is coupled to the speaker cone by the contact of the rear of the speaker cone with the air contained within the box and acts to effectively raise the effective resonant frequency of the loudspeaker to a somewhat higher frequency than the loudspeaker would otherwise have.

This is undesirable because the effective resonant frequency of the loudspeaker, practically speaking, determines the bottom of the useful low frequency range which can be radiated into the listening region. This is so, because, at resonance, a very undesirable sharp peak will occur and the excursion of a loudspeaker cone will be such that serious distortion and extraneous noises will be reproduced.

Therefore, it can be seen that the enclosed, sealed, rigid box type of infinite baffle sound reproducing system hereinabove mentioned is self-defeating in one sense. True enough, it divorces the front and back acoustic radiation and prevents phase cancellation, but at the same time it raises the effective lowest frequency which can be usefully radiated into a listening region because of

the increased effective resonant frequency caused by the compliance of the enclosed air in the sealed rigid box or chamber.

This undesirable raising of the low frequency limit, occasioned by the compliance of the air enclosed in the box, is greater the smaller the volume of the enclosed air. Therefore, the only way to minimize this undesirable effect is to employ a very large sealed rigid box enclosing a very large volume of air. It is obvious that this is undesirable, since such a large box will be much more costly and less portable than a smaller speaker enclosure would be.

Furthermore, a considerable effective acoustic power loss occurs, because only the front acoustic radiation is actually directed into the listening region. This is not so important at medium or high frequencies, but the loudspeaker itself has an attenuated output at low frequencies and with one half of the output (the rear acoustic radiation) not being used, little useful low frequency acoustic radiation will be directed into the listening region.

Another prior art attempt to solve the hereinabove mentioned attenuated low frequency output of a sound reproducing system and enclosure comprises what is known in the art as a "Labyrinth" speaker enclosure which merely amounts to baffling, comprising one or more tortuous passages for the back radiation, so arranged that the back radiation will be forced to travel a longer path than the front radiation—the length of the increased travel being such that the back wave will be forwardly directed to reinforce the front acoustic radiation at some selected low frequency. Such an arrangement has numerous disadvantages. Since reinforcement of the front acoustic radiation by the back acoustic radiation occurs at some selected low frequency, the low frequency acoustic radiation output curve is very irregular and uneven, thus producing serious distortion of the low frequency sound radiation. Such arrangements have been virtually abandoned because of the serious difficulties inherent therein.

Another prior art attempt to at least partially solve the hereinabove mentioned low frequency front and back acoustic radiation phase cancellation and the consequent reduction of useful low frequency acoustic output, while at the same time minimizing any tendency to raise the effective resonant frequency of the loudspeaker, comprises what is known as a bass reflex speaker, which is one of the most effective compromise speaker enclosures intended to solve the hereinabove mentioned problems that has been developed heretofore. Such a bass reflex speaker usually comprises a closed sealed rigid box having a speaker cone mounted in one wall thereof with the front thereof facing the listening region and the rear thereof facing the interior of the box. Thus far, it is quite similar to the hereinabove mentioned type of infinite baffle speaker enclosure. However, it is also provided with an outlet port in the same wall of the box that contains the speaker cone, and faces the same listening region as the speaker cone. Usually the outlet port is positioned below the speaker cone in said wall, although it is not limited to such a position. With this arrangement, virtually all of the front acoustic radiation in the medium and high frequency range is directed forwardly from the loudspeaker cone with very little acoustic radiation from the outlet port, which is effectively connected to the back of the speaker cone. Even this slight medium and high frequency acoustic radiation from the outlet port can be virtually eliminated by placing selective sound absorptive materials within the box which will effectively absorb most of the medium and high frequency back acoustic radiation.

During low frequency energization of the loudspeaker cone, however, a very substantial part of the total radiated acoustic energy will come from the outlet port, the air in said outlet port acting as an imaginary virtual diaphragm or speaker cone. The effective coupling between the rear of the speaker cone and the imaginary virtual diaphragm comprising the air in the outlet port takes place through the compliant air within the box, and the mass, compliance and resistance of the various components of the coupling of the rear acoustic radiation from the rear of the speaker cone and the imaginary virtual diaphragm comprising the air in the outlet port, are such as to produce a phase lag such that very little phase cancellation of the output low frequency acoustic radiation will occur. Thus, with such a bass reflex cabinet, or enclosure, for a loudspeaker, the effective low frequency output range is extended somewhat.

However, such a system has several disadvantages, one being the fact that the coupling between the back of the loudspeaker cone and the imaginary virtual diaphragm in the outlet port is effected largely as a result of the compliance of the air enclosed in the enclosure or box, and the compliance of said air is determined largely by the volume of the enclosed air. Therefore, such a bass reflex cabinet must be of fairly substantial size, or the effective low frequency output is greatly attenuated. Furthermore, the overall effective acoustic output curve of such bass reflex systems in the low frequency region is not at all flat, as is desirable, but has very substantial amplitude variation therein, leading to low fidelity reproduction of low frequency sound.

Generally speaking, the present invention comprises a loudspeaker enclosure including an enclosed chamber and a port therein adapted to carry a loudspeaker cone thereacross. Also provided is compliant means in contact with the air within the enclosed chamber, whereby the effective overall compliance of said air will be altered. The compliant means can be initially designed so as to have a desired compliance and/or mass so as to have a desired effect upon the low frequency output of the entire system, or the compliance and/or the mass thereof can be arranged for adjustment to any selected value. In a preferred general form of the present invention, the compliant means is positioned between the interior and the exterior of the enclosed chamber, although it is not so limited.

In one preferred general form of the present invention, the compliant means is positioned between the interior and the exterior of the enclosed chamber and includes low frequency acoustic radiator means adapted to radiate high level acoustic energy in a selected low frequency range in a phase relationship such as to reinforce the front acoustic radiation from the loudspeaker cone.

In another general form of the present invention, the compliant means comprises air pump means arranged to pump ambient air into the enclosed chamber when the loudspeaker cone is vibrating in a selected low frequency range, in a manner whereby the air pressure within the chamber will increase and in a manner whereby the compliance of the air within the chamber will be altered.

In another general form of the present invention, the compliant means comprises air pump means arranged to pump ambient air into and out of the enclosed chamber, when the loudspeaker cone is vibrating in a selected low frequency range, to alter the compliance of the air in the chamber and to act as an acoustic radiator adapted to radiate high level acoustic energy in a selected low frequency range, in a manner tending to reinforce the front acoustic radiation from the speaker cone.

It will be understood, from the above generic description of several general forms of the present invention, that virtually all of the hereinabove mentioned difficulties and disadvantages of prior art sound reproducing systems and/or enclosures are completely eliminated through the use of the present invention.

For example, very little or no low frequency cancellation of front and back radiation occurs as a result of phase difference, as hereinbefore mentioned in connection with many prior systems. The coupling com-

prising the air mass in the enclosure and the compliant means, which acts as the effective acoustic output radiating surface for the back radiation from the speaker cone, is such that a sufficient phase lag is obtained to cause the output back radiation and the output front radiation to reinforce each other instead of canceling out. And this in spite of the fact that the volume of air enclosed in the chamber may be very small and would ordinarily have a compliance such as to be incapable of producing the desired phase lag—the difference being produced by the compliant means which greatly modifies the effective compliance of the small volume of air enclosed within the chamber. Also, no substantial loss of power occurs as in prior art "infinite baffle" systems because of loss of the back acoustic radiation. In the system of the present invention, the back acoustic radiation in the low frequency range reinforces the front acoustic radiation.

The loudspeaker enclosure of the present invention can be very small and have low frequency output characteristics as good or better than a bass reflex cabinet a great deal larger. This is because the most critical factor about a bass reflex cabinet is the volume of the air enclosed therein which determines the coupling compliance, whereas, in the present invention, the coupling compliance is determined by the compliant means which may have any pre-determined value, or which can be adjusted to any desired value, thus eliminating cabinet volume as an important factor in the loudspeaker enclosure of the present invention. Furthermore, the loudspeaker enclosure of the present invention minimizes distortion and spurious harmonic generation in the low frequency range, and is capable of producing virtually pure fundamental tones as low as 30 cycles, or even lower in certain cases. This cannot be duplicated by any prior art system of anything like a comparable size. In addition, the present invention can do this with commercially available loudspeakers (even those with relatively small speaker cones).

With the above points in mind, it is an object of the present invention to provide a novel loudspeaker enclosure which can be made very small, and which, in combination with a loudspeaker, is capable of effectively radiating into a listening region substantial low frequency acoustic energy in a manner as good or better than very much larger prior art sound reproducing systems.

Another object of the present invention is to provide a novel loudspeaker enclosure provided with compliant means (which may be adjustable, if desired), adapted to effectively alter the compliance of the air within the speaker enclosure, whereby a desired phase lag in the back radiation from the rear of a loudspeaker cone can be effectively produced with a speaker enclosure of very small volume, said phase lag being such as to cause the output back radiation to reinforce the front radiation.

Other and allied objects will be apparent to those skilled in the art, after a careful perusal, examination and study of the illustrations, specifications and appended claims.

To facilitate understanding, reference will be made to the hereinbelow described drawings, in which:

Figure 1 is a front three-quarter perspective view (greatly reduced in size) of one illustrative embodiment of the present invention.

Figure 2 is a back three-quarter perspective view of the form of the invention shown in Figure 1 (also greatly reduced in size).

Figure 3 is a somewhat larger vertical view, partly in section, of the form of the invention shown in Figure 1, taken in the direction of the arrows I—I.

Figure 4 is a vertical sectional view of the form of the invention illustrated in Figures 1, 2 and 3, taken in the direction of the arrows IV—IV.

Figure 5 is a fragmentary view similar in aspect to Figure 3, but of a slightly modified form of the invention employing a slightly modified diaphragm and diaphragm mounting means.

Generally speaking, the loudspeaker enclosure of the present invention includes a closed chamber having a port therein adapted to carry a loudspeaker cone thereacross and provided with compliant means in contact with the air within the chamber, whereby the effective compliance of said air will be altered. In the specific form of the present invention described and illustrated in Figures 1, 2, 3 and 4, the enclosed chamber comprises a plurality of walls including a front wall 1 (provided with a loudspeaker cone port 2), a back wall 3 and two side walls 4 and 5 and a top and bottom wall 6 and 7 joining the front wall 1 and the back wall 3 together in spaced relationship to form a small sealed enclosed chamber (except for the exceptions hereinafter noted). The enclosed chamber is indicated generally at 8. The back wall 3 is also provided with a central port 9, which, in the specific example illustrated, is slightly larger than, and in alignment with, the front port 2. The outer rim 10 of a loudspeaker cone 11 is fixedly attached to the inside of the front wall 1 around the port 2 so as to effectively close the port 2 by reason of the loudspeaker cone 11 extending thereacross.

In the specific example described and illustrated herein in Figures 1, 2, 3 and 4, the compliant means comprises a diaphragm, indicated generally at 12 (which is illustrated as being circular and resiliently mounted by suitable resilient mounting means such as the spring means 13 spaced around the periphery thereof, with respect to the inside of the back wall 3 of the box). Suitable fastening means, such as the screw means 14, or any other desired type of fastening means, may be employed to mount the resilient spring means 13 with respect to the back wall 3 of the enclosure. It should be noted that the diaphragm is mounted by the resilient means so that an annular outer portion 15 of the diaphragm 12 is positioned in virtually parallel closely spaced relationship to the inside of the back wall 3 immediately around the port 9 therethrough in such manner that the annular portion 15 of the diaphragm 12 lies closely adjacent to an annular portion of the back wall 3 of the box.

This arrangement is such that lateral vibratory oscillation of the diaphragm 12, which occurs as a result of back acoustic radiation from the speaker cone 11 in a selected low frequency region, tends to move the annular portion 15 of the diaphragm 12 toward and away from the adjacent annular portion of the back wall 3, in a manner such that vibratory movement of the annular ring 15 tends to pump air into the enclosure 8 through the narrow passageway between the rear surface of the annular ring 15 and the inside surface of the adjacent annular portion of the back wall 3, and such that the outward stroke of the annular ring 15 toward the extreme right, as viewed in Figure 3, during oscillation of said annular ring 15 tends to almost (or in some cases, completely) seal the port 9 and minimize (or prevent) the escape of air from within the enclosure 8 to ambient atmosphere. This tends to produce a pressure increase within the enclosure 8 whenever the loudspeaker cone 11 is vibrating in a selected low frequency range.

The pressure increase and/or the compliance of the resilient diaphragm 12 and/or the spring coupling thereof to the back wall 3 of the enclosure is such as to alter the effective compliance against which the speaker cone 11 works in the rearward stroke of oscillation in a selected low frequency range. This produces virtually the same effect, as far as the rear surface of the speaker cone is concerned, as would a very large enclosure such as must be used in a good low frequency response bass reflex speaker cabinet. However, in the present invention, it can be attained in an enclosure which is actually only large enough to contain the speaker and the vibratable diaphragm.

In the specific example described and illustrated, the

diaphragm is also provided with a central disc shaped portion 16, effectively connected to the outer annular ring 15 by annular corrugations 17, which are intended to compliantly couple the outer annular ring 15 to the central disc portion 16.

In the specific example illustrated, the central disc portion 16 is provided with suitable weight means 18 which may be fastened by any desired type of fastening means, such as is indicated at 19, to the disc 16, and which may be removable for replacement by a greater or lesser weight for modification of the low frequency response characteristics of the speaker enclosure. The central portion of the disc 16 and the outer annular ring 15 are connected by the flexible corrugations 17 for the purpose of reducing the resonant frequency of the diaphragm and the weight carried thereby, since the effective low frequency limit which can be radiated into a listening region from the speaker enclosure and speaker is effectively limited by the resonant frequency of the diaphragm (as well as the speaker cone).

Also, the central portion of the diaphragm 12 acts as a very efficient acoustic radiator for radiating low frequency energy outwardly through the port 9, which recombines with the acoustic energy which is radiated from the front of the speaker cone 11 through the front port 2 into a listening region. The phase relationship of the rear acoustic radiation from the diaphragm 12 and the front acoustic radiation from the front of the speaker cone 11 being such that they reinforce each other and produce a very large low frequency acoustic output in the listening region.

It should be noted that either the annular ring 15 or the adjacent annular portion of the back wall 3 of the enclosure may be provided with suitable resilient means in order to prevent any spurious and extraneous noise from being produced in the event that vibratory movement of the annular ring 15 toward the right causes it to actually make engagement with the adjacent annular portion of the back wall 3 of the enclosure.

The spring means 13 may be positionally adjustable so that the spacing between the annular disc 15 of the diaphragm 12 and the adjacent annular portion of the back wall 3 of the enclosure 8 can be adjusted at will so that at minimum excursion of the annular ring 15 contact of the ring 15 and the wall 3 does not quite take place.

In another general form of the present invention, I contemplate arranging the spacing between the annular ring 15 and the adjacent annular portion of the back wall 3 so that outward movement of the ring 15 effectively closes the rear port 9 during the early portion of the outward stroke and thus produces a more effective air pumping action into the enclosure 8. This form of the present invention requires the use of resilient means positioned between the annular ring 15 and the rear wall 3, or requires that either said wall 3 or the annular ring 15 be of resilient construction at the contacting surface.

Figure 5 illustrates one form of a slightly modified version of the present invention, and corresponding parts will be indicated by similar primed reference numerals. In the specific modification illustrated in Figure 5, the diaphragm 12' is shown resiliently illustrated in Figure 5, the diaphragm 12' is shown resiliently connected at its outer periphery to the inside of the rear wall 3' by resilient sealing means 20 which acts to resilently mount the diaphragm 12' in spaced relationship with respect to the port 9' of the back wall 3' of the enclosure 8' and also acts to effectively seal the port 9' from the enclosure 8' so as to prevent the passage of air into or out of the enclosure 8' through the port 9'. In this form of the present invention, there is no pressure build up within the chamber 8' when the loudspeaker cone is vibrating in a selected low frequency range, as was the case in certain embodiments of the first form of the present invention illustrated herein in Figures 1, 2, 3 and 4. However, the diaphragm 12', being compliant and/or compliantly mounted by the resilient sealing means 20 (which may be rubber, plastic or any other suitable material), does effectively alter the compliance of the air mass within the enclosure 8' against which the rear surface of the loudspeaker cone works, thus making it possible to produce the desired phase lag in the acoustic output from the outer surface of the diaphragm 12' with respect to the front radiation from the speaker cone—and to do this in a very small box in a manner not possible in prior art constructions.

It should be noted, that if desired, the resilient means 20 (shown in Figure 5) may act merely as resilient, compliant coupling means, and may not act as a sealing means effectively sealingly isolating the enclosure 8' from ambient atmosphere. This can be accomplished by providing a plurality of apertures in the resilient means 20. This form of the invention will operate very much like the first form illustrated in Figures 1, 2, 3 and 4.

Numerous modifications and variations of the present invention will occur to those skilled in the art after a careful study hereof. All such properly within the scope of the present invention are intended to be included and comprehended herein as fully as if they were specifically described and illustrated herein. For example, the shape and configuration of the loudspeaker enclosure is not limited to that illustrated herein, but may assume a great variety of forms, and may be of integral or non-integral construction and formed of any desired materials. The compliant means need not be positioned in the rear wall of the enclosure opposite the speaker cone, but can be positioned in any other wall of the enclosure—even the front wall if desired, which may be desirable under some circumstances. The structure, arrangement and composition of the compliant means may be modified substantially from that illustrated herein. In certain cases it may be positioned directly in one wall of the enclosure rather than spaced inwardly from a port therethrough. It may be compliantly coupled to the enclosure or enclosure wall by any suitable means and it may itself be compliant or it may be relatively stiff and merely provided with compliant coupling means, thus having a piston action. It may have several relatively stiff portions connected by flexible portions therebetween, if desired. It may be provided with weight means (which may be adjustable, if desired) in order to alter the effective resonant frequency thereof. It may be arranged so as to not effectively close the diaphragm port, but to merely oscillate or vibrate in spaced relationship thereto, and it may be arranged to effectively sealingly close one wall of the enclosure and merely act as a compliant means and an acoustic radiator, without allowing any direct communication of air from the interior or the exterior of the box or enclosure. The diaphragm may be arranged to have two portions connected by relatively flexible portions in a manner such that the resonant frequency of one of said portions is different from the resonant frequency of the other of said portions, to facilitate combination air pumping action into the enclosure in a selected low frequency range and direct outward acoustic radiation from the diaphragm in said selected low frequency range. In certain cases, the compliant means may not be positioned between the interior of the enclosure and ambient atmosphere, but may be positioned within the enclosure entirely and subjected to the air pressure therein and so arranged as to alter the effective compliance of the air in said enclosure.

The embodiments of the present invention described and illustrated herein are exemplary only and are not intended to limit the scope of the present invention, which is to be interpreted in the light of the prior art and the appended claims only, with due consideration for the doctrine of equivalents.

I claim:

1. A loudspeaker enclosure including a chamber having a port therein adapted to carry a loudspeaker there-

across in a manner virtually closing said port, comprising: compliant pump means in contact with air within the chamber and responsive to low frequency oscillation of said air in a manner whereby said compliant pump means will pump ambient air into the chamber when the loudspeaker is vibrating in a selected low frequency range whereby the mean air pressure within the chamber will increase thereby altering the mean effective compliance of the air within the chamber.

2. A device of the character defined in claim 1, wherein the compliant pump means also includes acoustic radiator means arranged to radiate high level acoustic energy in a selected low frequency range thereby extending the low frequency range of useful acoustic power which can be radiated into a listening region.

3. A loudspeaker enclosure including a plurality of walls joined together to form an enclosed chamber having a ported wall adapted to carry a loudspeaker thereacross in a manner virtually closing said port, comprising: port means in one of the walls forming the chamber; compliant pump means mounted in cooperative relationship with respect to said port means and in contact with air within the chamber, said compliant pump means being responsive to oscillatory movement of the air within the chamber and arranged to pump ambient air into the chamber when the loudspeaker is vibrating in a selected low frequency range in a manner whereby the mean air pressure within the chamber will increase thereby altering the mean effective compliance of the air in the chamber.

4. A device of the character defined in claim 3, wherein said compliant pump means includes acoustic radiator means arranged to radiate high level acoustic energy in a selected low frequency range thereby extending the low frequency range of useful acoustic power which can be radiated into a listening region.

5. A device of the character defined in claim 4, wherein the combination compliant pump means and acoustic radiator means comprises a thin sheet diaphragm resiliently mounted in virtually parallel closely spaced resiliently

displaceable position across said port in the wall of the chamber.

6. A device of the character defined in claim 5, wherein the thin sheet diaphragm is positioned within the chamber extending across the port for resilient displacement toward and away from said port.

7. A device of the character defined in claim 6, wherein the diaphragm means has a substantially greater vibratory surface area than the area of the port whereby vibratory movement of the diaphragm toward and away from the port in response to low frequency vibration of the loudspeaker will pump air into the chamber and increase the mean effective pressure thereof, thus altering the mean effective compliance of the air within the chamber.

8. A device of the character defined in claim 7, including weight means carried by the diaphragm for causing the diaphragm to have the proper low resonant frequency.

9. A device of the character defined in claim 8, wherein the diaphragm includes a central disc shaped portion and an outer annulus resiliently joined thereto.

10. A device of the character defined in claim 9, wherein the outer annulus is effectively resiliently mounted with respect to the interior of the ported wall of the chamber and wherein the central disc shaped portion of the diaphragm carries the weight means for lowering the resonant frequency.

References Cited in the file of this patent

UNITED STATES PATENTS

1,761,100	Baldwin	June 3, 1930
1,787,946	La Rue	Jan. 6, 1931
1,820,956	Von Arco	Sept. 1, 1931
1,841,101	Flanders	Jan. 12, 1932
1,878,162	Mead	Sept. 20, 1932
1,967,223	Bostwick	July 24, 1934
1,988,250	Olson	Jan. 15, 1935
2,121,008	Bilhuber	June 21, 1938

FOREIGN PATENTS

51,523	Denmark	Apr. 2, 1936