United States Patent

[11] **3,565,068**

[72] Inventor **Allan Morris Bickford**
East Aurora, N.Y.

[21] Appl. No. **797,631**
[22] Filed **Feb. 7, 1969**
[45] Patented **Feb. 23, 1971**
[73] Assignee **Automatic Sprinkler Corporation of America**
Cleveland, Ohio

[54] **BREATHING APPARATUS**
9 Claims, 8 Drawing Figs.

[52] **U.S. Cl.** **128/142,** 23/281
[51] **Int. Cl.** **A62b 7/08**
[50] **Field of Search** ..... 128/142, 142.2, 142.3, 142.4, 142.6, 142.7, 145.8, 191, 142—142.7; 23/281

[56] **References Cited**

UNITED STATES PATENTS

1,395,948	11/1921	Brager	128/142.2
1,929,343	10/1933	Bellom	128/142.6
2,821,192	1/1958	Monro	128/142.6

FOREIGN PATENTS

324,908	1/1930	Great Britain	128/142.6

Primary Examiner—L. W. Trapp
Assistant Examiner—G. F. Dunne
Attorney—Christel and Bean

ABSTRACT: A self-contained emergency breathing apparatus comprising a chemical oxygen generator having an expandable casing, a delivery tube, a filter in the tube, a carbon dioxide absorber having a mouthbit, and a hood for covering the head of the user and enclosing the carbon dioxide absorber to form a closed circuit rebreathing system. The components of the system are encased in a compact package form in a container which can be carried by the user and readily opened in an emergency situation.

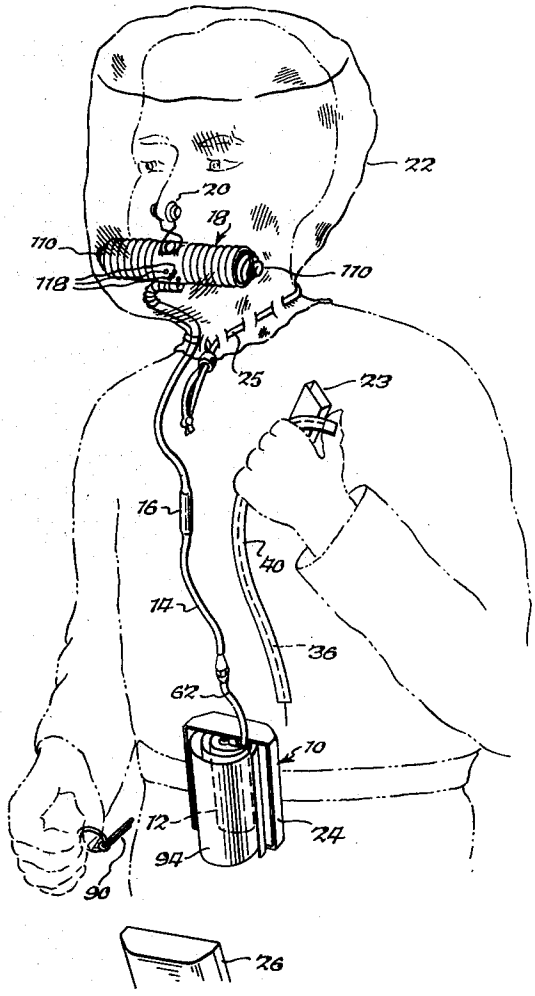

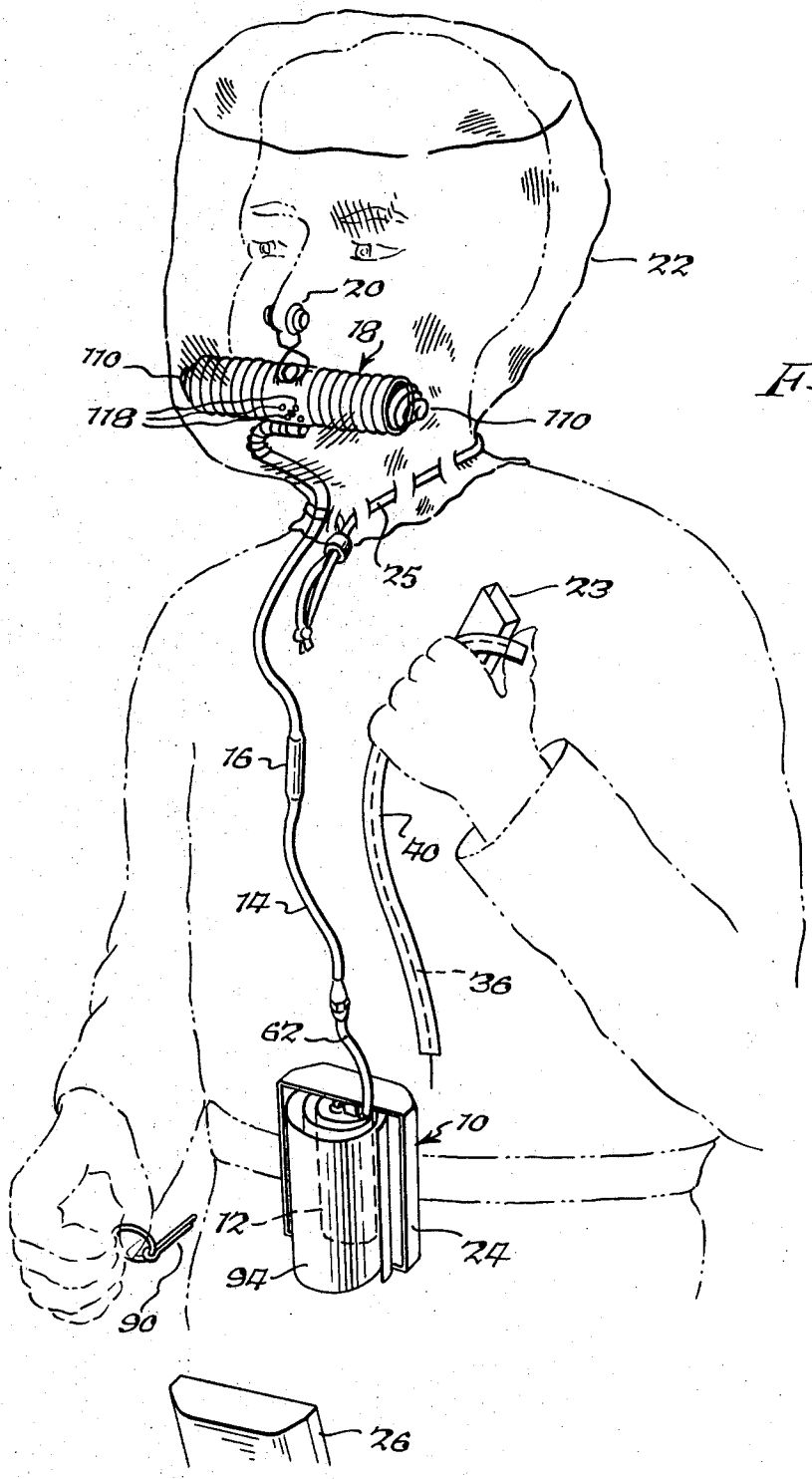

Fig. 1.

INVENTOR.
Allan M. Bickford
BY
Christel & Bean
ATTORNEYS.

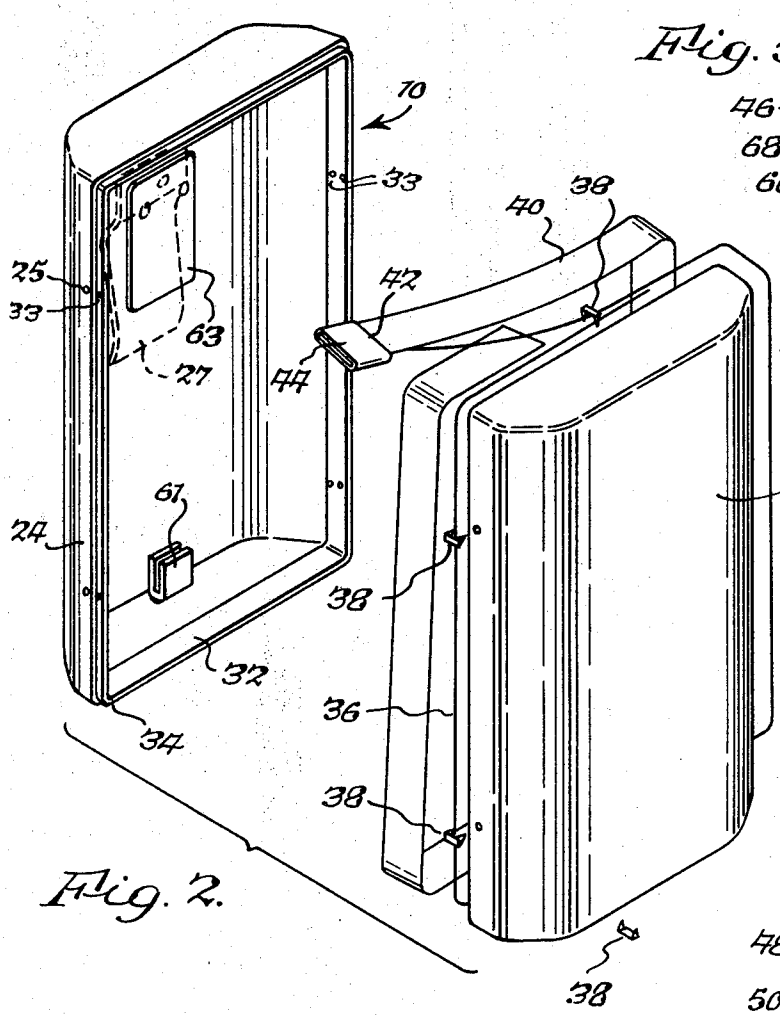

Fig. 2.

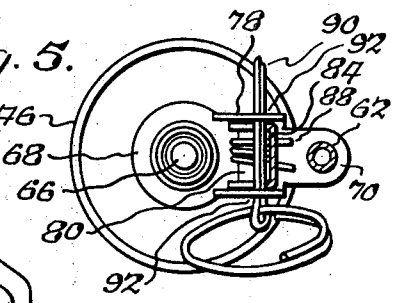

Fig. 5.

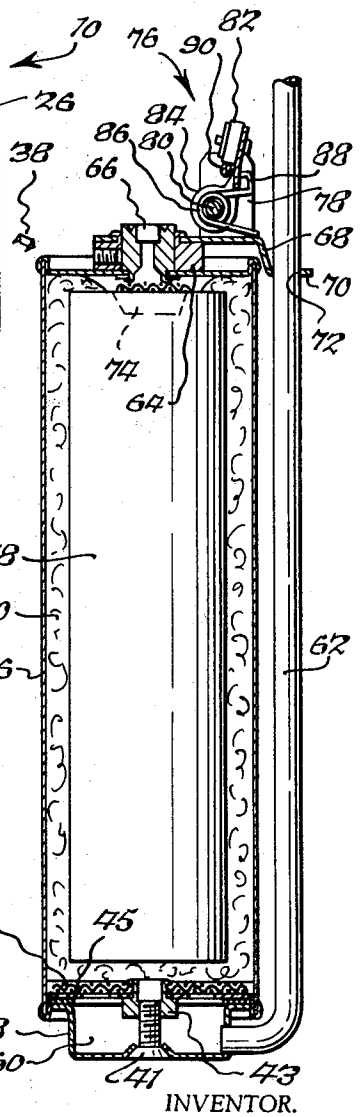

Fig. 4.

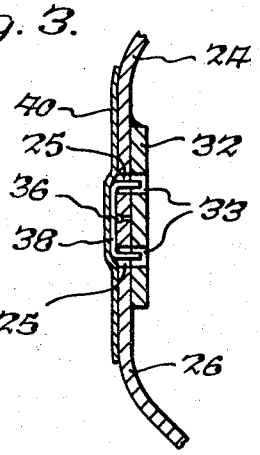

Fig. 3.

INVENTOR.
Allan M. Bickford
BY
Christel & Bean
ATTORNEYS.

Fig. 7.

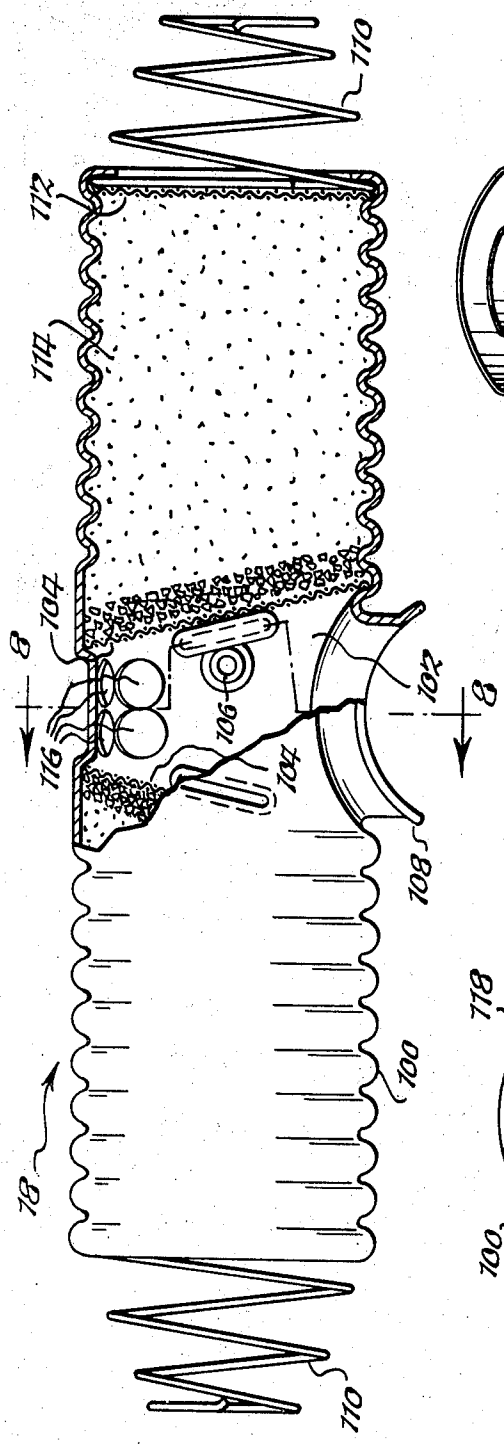

Fig. 6.

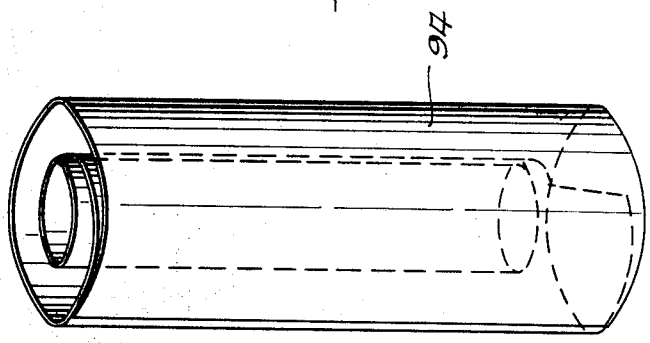

Fig. 8.

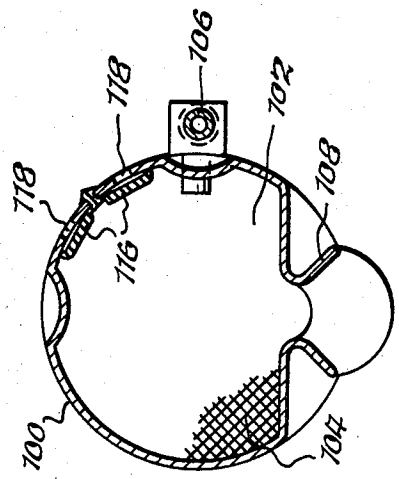

INVENTOR.
Allan M. Bickford
BY
Christel & Bean
ATTORNEYS.

BREATHING APPARATUS

BACKGROUND OF THE INVENTION

This invention relates to breathing apparatus and, more particularly, to self-contained emergency escape breathing apparatus.

It is known to provide emergency breathing equipment for use in contaminated or oxygen deficient atmospheres. Very often, environments which normally have adequate breathing air are susceptible to contamination and depletion of sufficient oxygen for breathing purposes so that it is necessary for such equipment to be readily accessible. It is desirable that such equipment be carried on the person of the user in the event of an emergency. However, existing emergency breathing equipment often is heavy and cumbersome and therefore awkward to wear or carry when not in use.

SUMMARY OF THE INVENTION

Accordingly, it is an object of the present invention to provide an emergency breathing apparatus which affords complete respiratory and eye protection with a minimum of equipment.

It is another object of the present invention to provide the foregoing in a compact packaged form that can be conveniently stored and carried by a user.

Generally speaking, the closed circuit emergency breathing apparatus of the present invention comprises an oxygen generator having a spring metal casing adapted to expand and protect the body and garments of the user against the heat of the generator during combustion, a delivery tube connecting the generator to a carbon dioxide absorber having a mouthbit, a hood for covering the head of the user and enclosing the carbon dioxide absorber to form a true closed circuit rebreathing system, and spacer means mounted on the absorber for preventing collapse of the hood against the outlet ends of the absorber.

The foregoing and other objects, advantages and characterizing features of the present invention will become clearly apparent from the ensuing detailed description of an illustrative embodiment thereof, taken together with the accompanying drawing wherein like reference numerals denote like parts throughout the various views.

BRIEF DESCRIPTION OF THE DRAWINGS

FIG. 1 is a perspective view of an emergency breathing apparatus of the present invention shown in use;

FIG. 2 is an exploded view of the container for packaging the foregoing apparatus;

FIG. 3 is a sectional view illustrating the means for securing and sealing the container;

FIG. 4 is a longitudinal sectional view of the oxygen generator of the present invention;

FIG. 5 is a top plan view of the oxygen generator of FIG. 4;

FIG. 6 is a perspective view of the expandable casing for the oxygen generator;

FIG. 7 is an elevational view, partially in section, of the carbon dioxide absorber assembly of the present invention; and

FIG. 8 is a cross-sectional view of the carbon dioxide absorber assembly, taken about on line 8–8 of FIG. 7.

BRIEF DESCRIPTION OF THE PREFERRED EMBODIMENT

Referring now in detail to the drawings, there is shown in FIG. 1 a self-contained emergency escape breathing apparatus comprising a sectional container **10** housing a source of chemically derived oxygen in the form of an oxygen generator **12**, a flexible oxygen delivery tube **14**, a filter **16**, a carbon dioxide absorber assembly **18**, a nose obstructor **20**, and a protective hood **22** completely covering the head of the wearer.

Container **10** (FIG. 2) comprises a pair of casing sections **24** and **26** connected together by means which permit easy separation of said casings. A flat elongated strip **32**, bent to the inside configuration of casing **24** is fastened thereto as by means of an adhesive and has a portion **34** extending axially outwardly from casing **24** adapted to be snugly received within the peripheral walls of casing **26**. A clip **27** is fastened or other wise fixedly secured to the outer surface of casing **24** and is adapted to be attached to the belt or other wearing apparel of the user. Means are provided for securing casings **24** and **26** together, such means comprising a wire **36** encircling container **10** with wire **36** disposed between the abutting edges of the respective casings. A plurality of staples **38** overlie wire **36** and have opposite legs positioned in openings **25** of casings **24** and **26**, respectively, and in openings **33** of strip **32**. An elongated adhesive tape **40**, preferably of the pressure sensitive type, is wrapped about wire **36** and staples **38** to secure them in place with the free end of the tape folded over the free end of wire **36** (FIG. 2). A short strip of tape **42** extending transversely of tape **40** is folded over the free end thereof to form a gripping tab **44** which can be grasped by the user's fingers to unwrap tape **40** from container **10** withdrawing along with it staples **38** and wire **36** to permit separation of casings **24** and **26**.

A significant feature of this invention is that oxygen generator **12**, delivery tube **14**, absorber canister **18**, nose obstructor **20**, and protective hood **22** encased in a disposable container **23**, are compactly stowed and enclosed within container **10**, in the stored condition thereof prior to use.

Thus, all the components required for a self-contained emergency escape breathing apparatus are packaged within a small compact container of approximately 8 inches in length, 4 inches wide and 2 inches deep. The above dimensions are exemplary to illustrate the small size of the container and should not be taken as limiting the scope of this invention, it being understood that various sizes of containers may be employed within the purview of this invention.

Oxygen generator **12** comprises a canister **46** having an oxygen generating unit, hereafter referred to as an oxygen candle body **48**, encased therein and capable of evolving oxygen upon burning. Oxygen candle **48** consists of a consolidated body having uniformly distributed therethrough an alkali metal chlorate or perchlorate which generates oxygen upon combustion, a finely divided oxidizable material such as iron powder for burning and supplying part of the heat needed for combustion, a binder such as inorganic glass fibers or steel wool for holding the mass together and aiding in the even decomposition of the chlorate or perchlorate, and barium peroxide or like chlorine fixes for chemically eliminating traces of chlorine gas released during thermal breakdown of the chlorate or perchlorate. Such oxygen candle compositions are known and per se form no part of the present invention.

Candle body **48** is encased within a heat insulating envelope **50** of filter medium with candle body **48** and envelope **50** comprising a self-contained candle unit which can be handled and stored as such. Envelope **50** can be formed, for example, of fiberglass impregnated with a silicate or other hardening agent in an amount sufficient to make the envelope shape sustaining in the desired form which, in the illustrated embodiment, generally corresponds to the interior dimensions of canister **46**.

A bottom cap assembly **58** is attached to the bottom of generator **12** and defines a chamber **60** into which filtered oxygen is collected. One end of a tube **62** communicates with chamber **60** for conveying oxygen therefrom and is adapted to be connected at its other end to delivery tube **14**. Mounted on the top of generator **12** is a bracket **64** having an aperture therethrough for receiving a primer **66**. A tab member **68** is mounted on top of bracket **64** and is provided with an offset portion **70** having an aperture **72** therethrough for receiving tube **62**.

In order to secure the top of oxygen generator **12** to casing **24**, an internal casing reinforcing bracket **63** is adapted to receive a chain or a heat resistant cord (not shown) for encircling the upper end of oxygen generator **12**.

A filter screen 47 is fitted against the apertured bottom wall 45 of the canister 46. A flanged nut 43 receives a screw 41 which holds cap 58 against a seal washer, thereby providing a gas tight assembly.

Combustion of oxygen candle 48 is initiated by an igniter composition 74 which comprises the foregoing oxygen evolving composition enriched with a metal powder, such as iron, to provide a concentrated area of the intense heat when ignited by primer 66. A firing mechanism, generally designated 76, comprises a bracket 78 mounted on tab member 68 and a shaft 80 extending therethrough. A firing pin 82 has an extension 84 mounted on shaft 80. A coiled spring 86 mounted on shaft 80 has a portion 88 biasing firing pin 82 in a counterclockwise direction as viewed in FIG. 4. Normally, pin 82 is held in the cocked position shown in FIG. 4 by means of a cotter pin 90 inserted in openings in the sides of bracket 78 and disposed in a groove 92 on the underside of extension 84. When cotter pin 90 is withdrawn, the force of spring 86 drives firing pin 82 into contact with primer 66 which initiates ignition of oxygen candle 48.

An important feature of the present invention is that the outer cylindrical wall of canister 46 is encased in a coiled sheet 94 of spring metal which is formed at its inner end to tightly engage about canister 46. That portion of sheet 94 which engages about canister 46 is dimensioned to fit between the crimped ends thereof. The remainder of sheet 94 extends below canister 46 and fits into bracket 61. Sheet 94 is held in its coiled condition within container 10 when the latter is closed, and is released to its expanded condition when casings 24 and 26 are separated as shown in FIG. 1. The expanded coiled sheet serves as a spacing barrier to protect the user against burning contact with oxygen candle 48 while providing ventilating passages permitting cooling air to communicate with the heated peripheral surface of canister 46 and with the heat exchange surface provided by sheet 94, to dissipate the heat therefrom. The extension of sheet 94 below canister 46 provides additional protection against accidental contact therewith.

The carbon dioxide absorber assembly 18 comprises a corrugated canister 100 having a chamber 102 defined by a pair of spaced screens 104. Chamber 102 is connected to delivery tube 14 by means of an inlet bleed fitting 106. A mouthbit 108 is provided on canister 100 and communicates with chamber 102. Spacer means in the form of a pair of conical springs 110 are provided at opposite ends of canister 100 and bear against end screens 112 disposed in the endmost grooves of corrugated canister 100. The smaller ends of springs 100 are adapted to engage hood 22 upon inhalation to prevent hood 22 from collapsing against end screens 112. The spaces between screens 104 and 112 are filled with a suitable mixture of carbon dioxide absorbing granules 114. Upon exhalation, exhaled air is directed through the carbon dioxide absorbing material outwardly through end screens 112 into the interior of hood 22.

Four flapper valves 116 are mounted about openings or ports 118 in canister 100 and permit flow of breathing air from the interior of hood 22 into chamber 102 upon inhalation. Valves 116 close ports 118 upon exhalation to direct the exhaled air into the carbon dioxide absorbing material.

Hood 22 completely encloses the head of the wearer and is preferably formed of a transparent flexible plastic material. If desired, hood 22 may be formed of a generally opaque flexible plastic material having a transparent window portion for providing visibility. Hood 22 is fitted with a cord 25 for securing the lower open end around the neck in a manner to provide a closing which is not necessarily a gas tight seal but offers resistance to the free flow of gas from the hood.

In use, tab 44 is grasped by the user'fingers and pulled to unwrap tape 40 from about container 10. Staples 38 and wire 36 adhere to the adhesive side of tape 40 and are removed therewith to permit separation of casings 24 and 26. Casing 26 is removed and discarded permitting the coiled sheet of spring metal 94 to expand as shown in FIG. 1. Carbon dioxide absorber 18 is removed from casing 24 and the mouthbit 108 is placed in the mouth of the user. Nose clip or nose obstructor 20 carried by absorber assembly 18 is used to prevent inadvertent exhalation through the nostrils. The assembly canister has molded portions engaging the nose clip wire. Hood 22 is removed from disposable container 23, placed over the wearer's head and tightened about the neck by means of cord 25.

To initiate the oxygen evolving process, cotter pin 90 is withdrawn to release firing pin 82 and allow the force of spring 86 to drive firing pin 82 into contact with primer 66 thereby initiating ignition of oxygen candle 48. Oxygen is supplied through delivery tube 14 and is bled into chamber 102 of carbon dioxide absorber 18 at a rate sufficient to meet the oxygen consumption of the user. Thus, pure oxygen is supplied through delivery tube 14 to supplement the oxygen contained in the breathing air within the hood which flows through openings 118 upon inhalation. Upon exhalation, gas is directed through the carbon dioxide absorbent material outwardly through end screens 112 and into the space within the interior of the hood. Excessive gas pressure within the hood, such as when oxygen flow is greater than that consumed, is discharged by leakage at the neck closure. Thus, a true closed circuit rebreathing system is formed with duration determined by the carbon dioxide absorbing capacity and the capacity of oxygen evolving candle 48. Eyes are protected from toxious fumes and smoke and a full field of vision is provided by the transparent material of the hood. Heat generated by the carbon dioxide absorption reaction is dissipated to the atmosphere through the large surface area presented by the plastic hood so that the resulting temperature of inhaled gas is relatively low and comfortable. Where resistance to external ambient heat is desired, the hood may be made from a heat transparent material, such as a polimide film for example. Added heat resistance can be provided by applying a reflective coating to the surface of the hood, leaving only enough transparent surface for visibility.

From the foregoing, it is seen that the objects of the present invention have been fully accomplished. As a result of this invention, an improved closed circuit breathing apparatus is provided for use in escape from toxic atmospheres. The apparatus affords complete respiratory and eye protection with a minimum of components and is contained in a relatively small pocket-sized package. Although the apparatus of this invention can be used with other means for supplying oxygen, such as compressed or liquified oxygen or air, it is preferably used with a chemically derived oxygen supply, as herein described, because only a minimum of components are required to control the flow of oxygen thereby making possible a lighter, smaller and less complicated apparatus. Also, the package can be kept sealed for an indefinite period with no inspection and maintenance required.

A preferred embodiment of the principles of this invention having been described and illustrated, it is to be realized that modifications thereof can be made without departing from the broad spirit and scope of this invention as defined in the appended claims.

I claim:

1. A breathing apparatus comprising a source of oxygen; a carbon dioxide absorber assembly including a mouthbit; a hood adapted to shroud the entire head of the wearer and cover said assembly; a tube connecting said source of oxygen to the interior of said hood; said hood having an opening and means closing said opening about a wearer's neck when in use; and a container for housing said source of oxygen, said assembly, said tube and said hood in compact kit form prior to use.

2. A breathing apparatus according to claim 1 wherein said source of oxygen comprises an oxygen generator having a canister and an oxygen evolving body, said canister having a chamber connected to said delivery tube.

3. A breathing apparatus according to claim 2 together with a casing formed of a springy material connected to said

canister wrapped tightly thereabout when enclosed in said container, said casing being adapted to expand radially outwardly when said container is opened.

4. A breathing apparatus according to claim **1** wherein said container is formed of two sections, one of said sections mounting said oxygen generator, and means securing said sections together.

5. A breathing apparatus according to claim **4** wherein said securing means includes a wire encircling said sections, staples overlying said wire and holding said sections together, and a strip of material adhesively secured to said staples and said wire and having a pull tab at one end thereof.

6. A breathing apparatus according to claim **1** wherein said assembly comprises a canister, a chamber in said canister communicating with said tube, and carbon dioxide absorbent

material in said canister on opposite sides of said chamber.

7. A breathing apparatus according to claim **6** together with at least one port in said chamber, and valve means for opening said port upon inhalation and closing said port upon exhalation to direct exhaled air into the carbon dioxide absorbent material.

8. A breathing apparatus according to claim **7** together with spacer means provided at the opposite ends of said canister for preventing collapse of said hood against said opposite ends of said canister.

9. A breathing apparatus according to claim **1** together with an obstructor adapted to close the nose passages of the wearer.