US00D795472S

(12) **United States Design Patent** (10) **Patent No.: US D795,472 S**
Leutiger (45) **Date of Patent: ** Aug. 22, 2017**

(54) **TAILLIGHT ASSEMBLY FOR A MOTOR VEHICLE**

(71) Applicant: **Dr. Ing. h.c. F. Porsche Aktiengesellschaft**, Stuttgart (DE)

(72) Inventor: **Burkhard Leutiger**, Pforzheim (DE)

(73) Assignee: **Dr. Ing. h.c. F. Porsche Aktiengesellschaft**, Stuttgart (DE)

(**) Term: **15 Years**

(21) Appl. No.: **29/551,118**

(22) Filed: **Jan. 11, 2016**

Related U.S. Application Data

(63) Continuation of application No. 29/502,167, filed on Sep. 12, 2014, now abandoned.

(30) **Foreign Application Priority Data**

Mar. 14, 2014 (DE) 40 2014 100 257

(51) **LOC (10) Cl.** **26-06**

(52) **U.S. Cl.**
USPC **D26/28**

(58) **Field of Classification Search**
USPC D26/28–36; 362/80–83, 267–269, 362/459–468, 475–478, 485–487
CPC F21S 48/00; F21S 48/10; F21S 48/115; F21S 48/225; F21S 48/1233; F21S 48/1266; F21S 48/1388; F21S 48/2268; F21V 21/04
See application file for complete search history.

(56) **References Cited**

U.S. PATENT DOCUMENTS

D447,825	S *	9/2001	Lee	D26/28
D472,986	S *	4/2003	Kim	D26/28
D544,112	S *	6/2007	Moore	D26/28
D656,257	S	3/2012	Larson	
D672,066	S	12/2012	Saracoglu	
D672,068	S	12/2012	Robinson	
D674,933	S	1/2013	Varga	
D685,935	S	7/2013	Redlich	
D712,573	S	9/2014	Borkert	

OTHER PUBLICATIONS

Entire patent prosecution history of U.S. Appl. No. 29/502,167, filed Sep. 12, 2014, entitled "Tailgate Assembly for Motor Vehicle".

* cited by examiner

Primary Examiner — Marcus Jackson
(74) *Attorney, Agent, or Firm* — RatnerPrestia

(57) **CLAIM**

The ornamental design for a taillight assembly for a motor vehicle, as shown and described.

DESCRIPTION

FIG. **1** is a perspective view of a taillight assembly for a motor vehicle;
FIG. **2** is a rear elevation view thereof;
FIG. **3** is a front elevation view thereof;
FIG. **4** is an elevation view thereof from the right side;
FIG. **5** is an elevation view thereof from the left side;
FIG. **6** is a top plan view thereof; and,
FIG. **7** is a bottom plan view thereof.

1 Claim, 7 Drawing Sheets

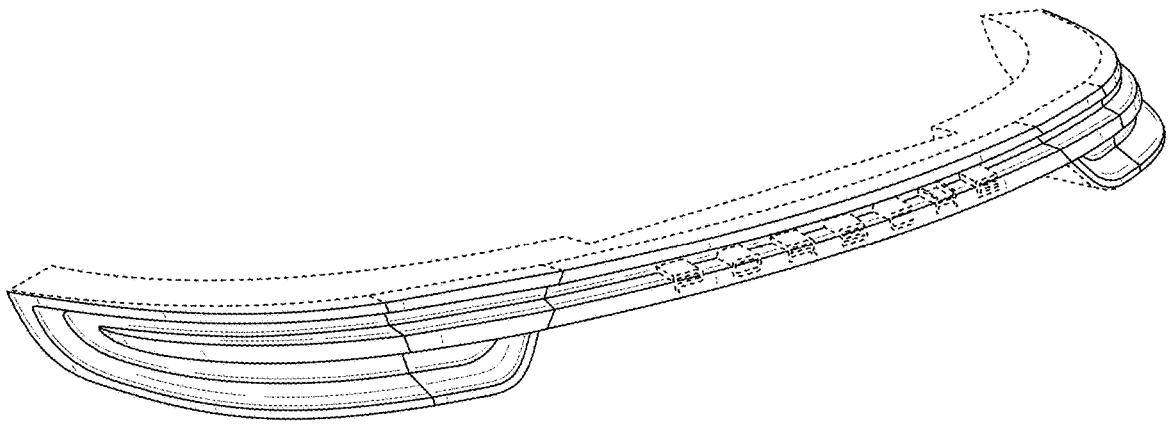

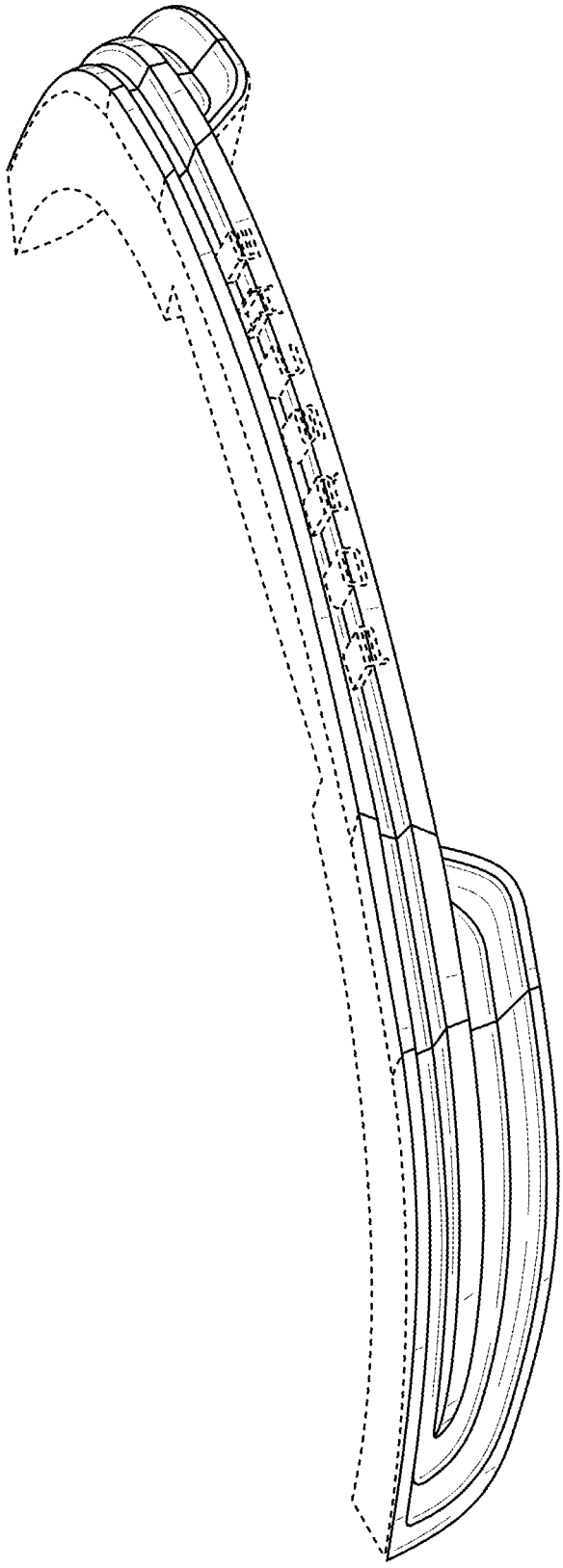

FIG. 1

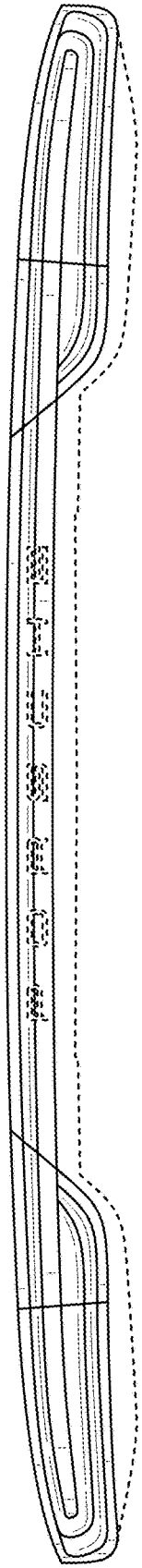

FIG. 2

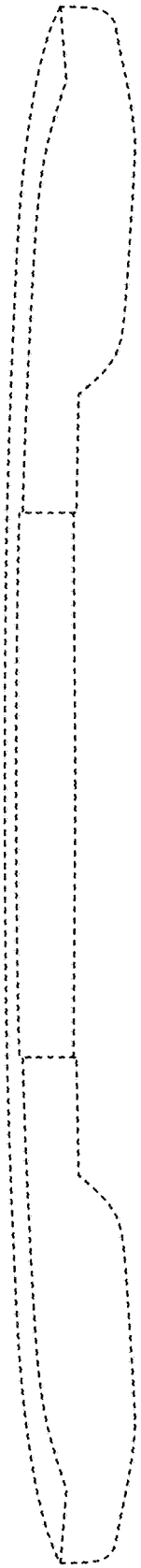

FIG. 3

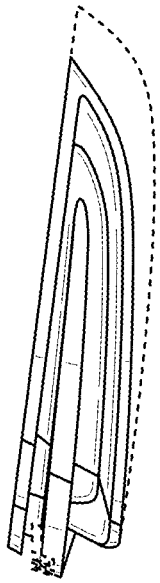

FIG. 4

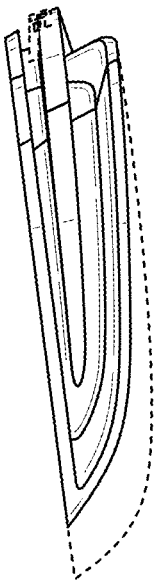

FIG. 5

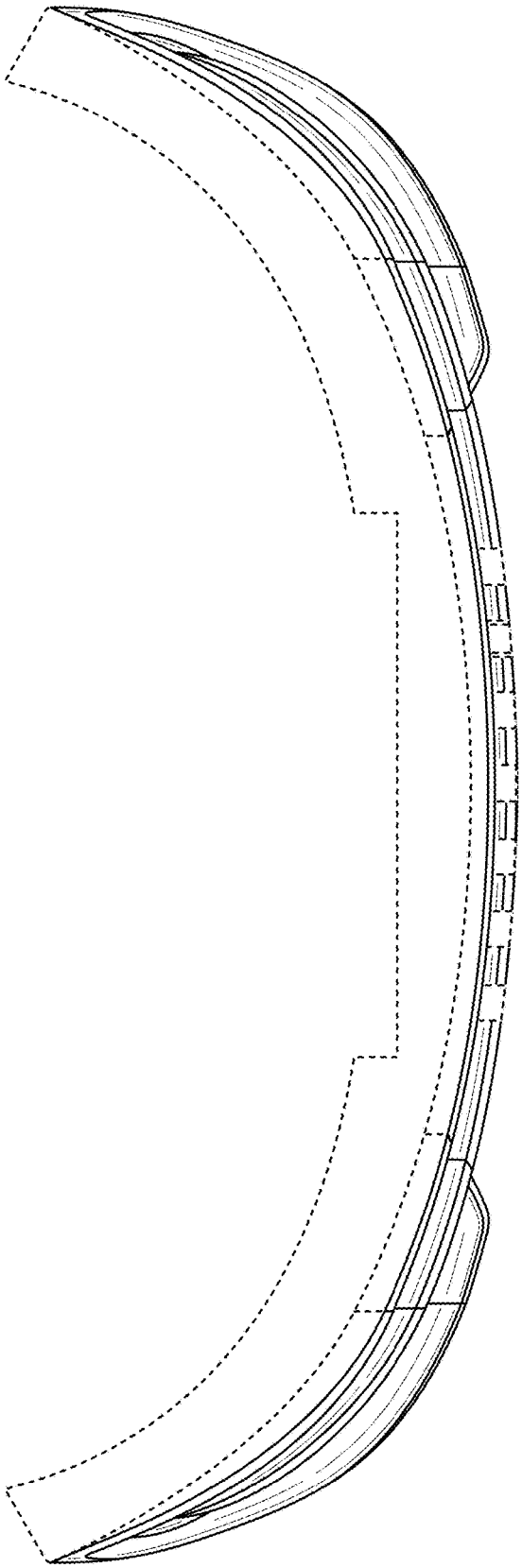

FIG. 6

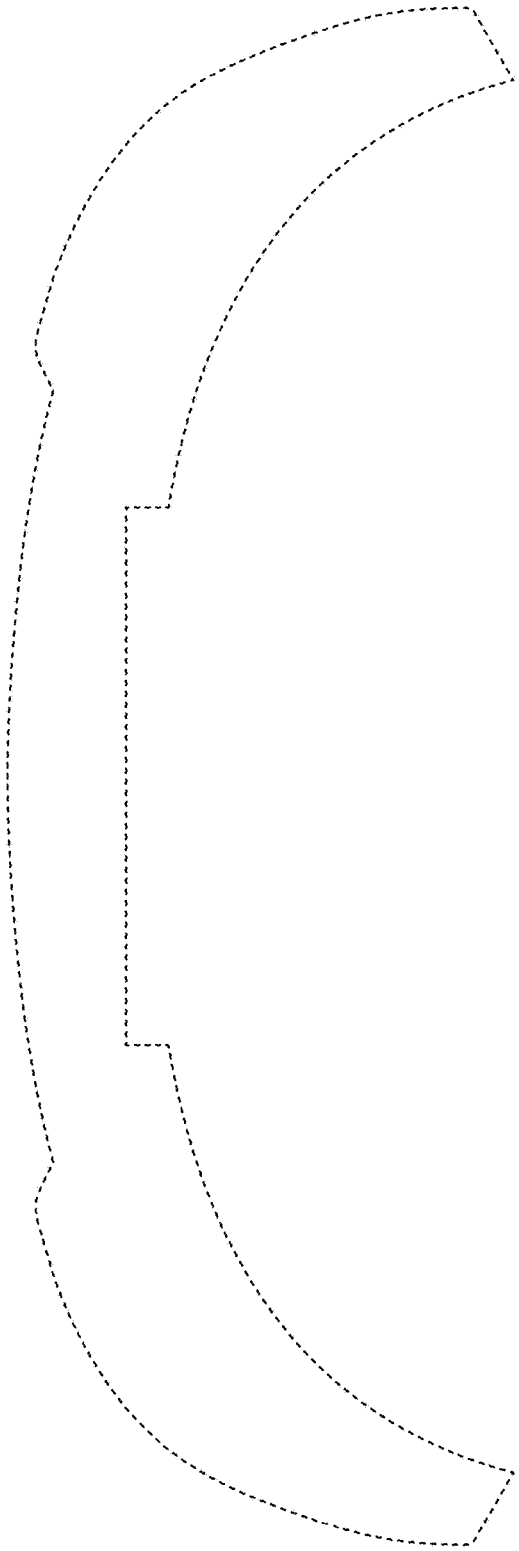

FIG. 7