April 4, 1939. E. K. SPYKER 2,153,281

OUTSIDE WINDOW SCREEN HANGER

Filed Dec. 12, 1936

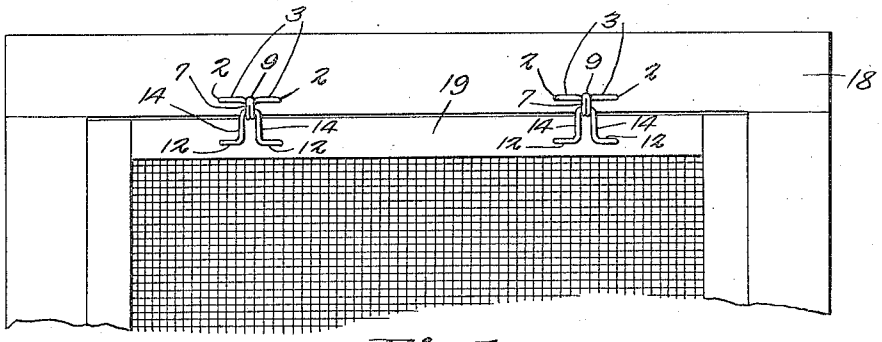

Fig. 1.

Fig. 2.

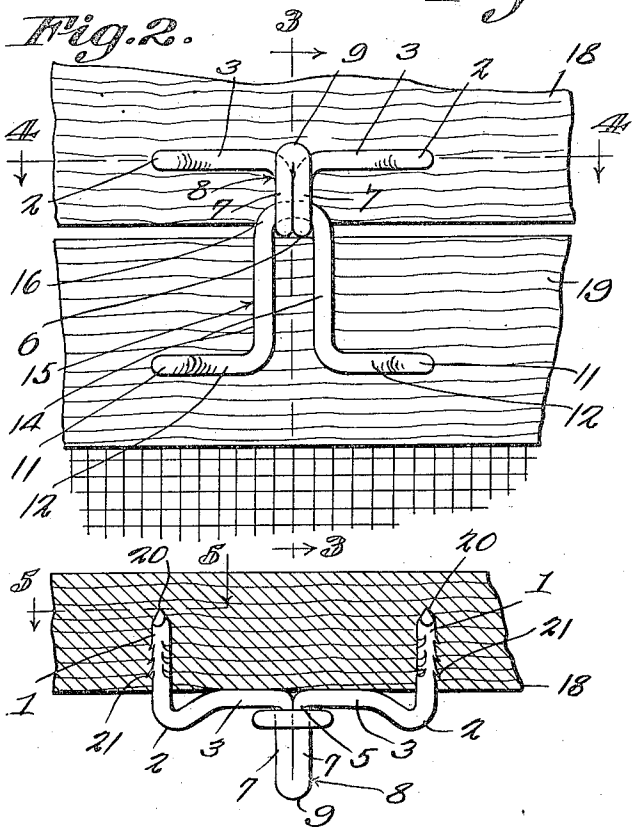

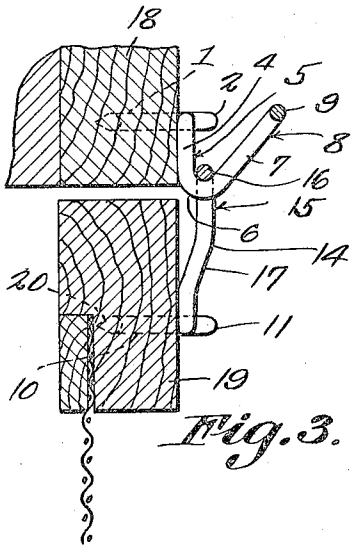

Fig. 3.

Fig. 4.

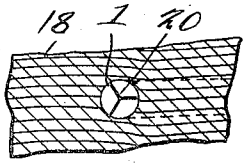

Fig. 5.

Inventor

E. K. Spyker

By Atwood & Co.

Attorneys.

Patented Apr. 4, 1939

2,153,281

UNITED STATES PATENT OFFICE

2,153,281

OUTSIDE WINDOW SCREEN HANGER

Ephraim K. Spyker, Sacramento, Calif.

Application December 12, 1936, Serial No. 115,592

1 Claim. (Cl. 16—172)

The device forming the subject matter of this application is adapted to be used for hanging outside window screens. One object of the invention is to provide an article of the class described, the constituent members of which may be driven by hammer blows, it being unnecessary to use screws or nails. Another object of the invention is to supply a hanger of the class described, each of the constituent parts of which may be formed in a single piece from wire stock. A further object of the invention is to supply a device of the class described wherein the connector which is mounted on the screen frame may be assembled readily with the bracket on the window frame.

It is within the province of the disclosure to improve generally and to enhance the utility of devices of that type to which the present invention appertains.

With the above and other objects in view, which will appear as the description proceeds, the invention resides in the combination and arrangement of parts and in the details of construction hereinafter described and claimed, it being understood that changes in the precise embodiment of the invention herein disclosed, may be made within the scope of what is claimed, without departing from the spirit of the invention.

In the accompanying drawing:

Fig. 1 shows in elevation, a screen frame suspended from a window frame by means of the device forming the subject matter of this application;

Fig. 2 is an elevation enlarged from Fig. 1;

Fig. 3 is a section on the line 3—3 of Fig. 2;

Fig. 4 is a section on the line 4—4 of Fig. 2;

Fig. 5 is a section on the line 5—5 of Fig. 4.

The device forming the subject matter of this application comprises a bracket fashioned from a single piece of stock, preferably wire, and comprising parallel driving prongs 1 connected by outstanding bends 2 to axially alined arms 3, which project toward each other. The bends 2 form bosses to receive a hammer blow, when the prongs 1 are driven into a window frame 18, and because the outstanding bends or bosses 2 are provided, the prongs 1 may be driven without marring the window frame 18. The prongs 1 are supplied with holding barbs 21. The inner ends of the arms 3 merge into the depending, contacting parts 4 of the shank 5 of a hook 6, said parts 4 being located in the same vertical plane with the arms 3 and having a bearing against the outer surface of the window frame 18. The parts 4 of the shank 5 of the hook 6 merge into the contacting side members 7 of an upwardly extended bill 8 for the hook, the bill being outwardly inclined at an angle of about 45 degrees. The side members 7 of the bill 8 are connected by a terminal bend 9, and a connector is detachably engaged with the hook 6, as shown in Fig. 3.

The connector is formed from a single piece of stock, preferably wire, and comprises parallel driving prongs 10, connected by outstanding bends 11 to axially alined arms 12, which project toward each other, the bends 11 forming bosses to receive a hammer blow, when the prongs 10 are driven, the bends 11 having the advantages hereinbefore attributed to the corresponding bends 2 of the bracket. The inner ends of the arms 12 merge into the upwardly extended and transversely spaced parts 14 of an inverted U-shaped eye 15, said parts 14 of the eye 15 being connected by a terminal bend 16. The lower portion of the eye 15 (Fig. 3) bears against the outer surface of the screen frame 19, into which the prongs 10 are driven. The upper portion of the eye 15 is outwardly offset as shown at 17, with respect to the lower portion of the eye 15, to facilitate the mounting of the eye 15 on the hook 6.

The ends of the prongs 1 and 10 are of a triangular form, which will enable the prongs, when driven, to enter, straight and directly, into the material of which the window frame 18 and the screen frame 19 are composed, deflection of the prongs, by hard-grained streaks in the wood, being avoided.

The device forming the subject matter of this application may be made at trifling expense out of wire stock. Its constituent parts may be driven easily into the window frame 18 or into the screen frame 19, without marring either of these structures. The construction is such that the eye 15 of the connector may be mounted readily on the hook 6 of the bracket, and with equal facility be removed therefrom.

The upwardly-convexed bend 9 of the hook 6 extends upwardly above a horizontal plane coincident with the upper edges of the arms 3, and slopes downwardly in opposite directions, to said plane. Each arm 3 is longer than the width of the eye 15. The result is, that the screen can be hung without the exercise of care, and even in the dark. The operator can turn up the screen unitl it is at right angles to the window frame, place the bend of the eye 15 on top of one of the arms 3, slide the bend of the eye horizontally along said arm until the eye rides over

the convexed, guiding top of the bend 9 of the hook, and then swing the screen down, the eye 15 becoming pivotally engaged with the hook. As soon as the operator feels the eye ride over the curved top of the bend 9, he knows without visual inspection, if such inspection is impossible, that the hook and the eye are interengaged, and that the screen is in position to be swung down.

Having thus described the invention, what is claimed is:

In a device for hanging window screens, an upstanding U-shaped eye and means for attaching it to a screen frame: and a hook engaged detachably with the eye, the hook being provided with oppositely-extended, horizontal, axially-alined arms supplied with means for attaching the hook to a window frame, the hook having an upwardly-convexed bend projecting upwardly above a horizontal plane coincident with the upper edges of the arms, and sloping downwardly in opposite directions, to said plane, the length of each arm being greater than the width of the eye.

EPHRAIM K. SPYKER.