Oct. 16, 1951 W. H. RUFFLE 2,571,617

FLUID PRESSURE OPERATED SWITCH

Filed July 23, 1949

FIG. 1.

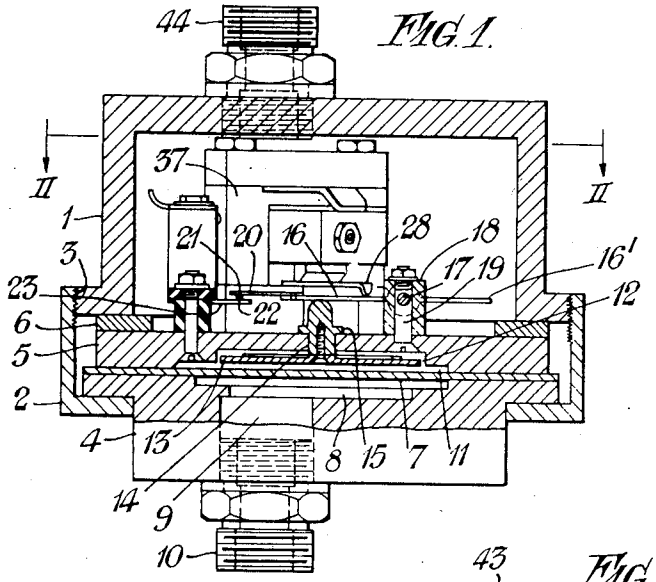

FIG. 3.

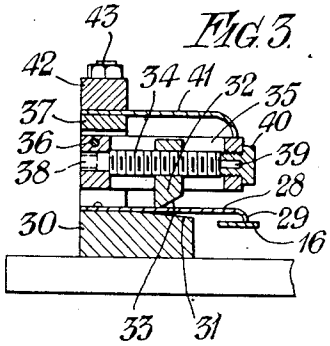

FIG. 4.

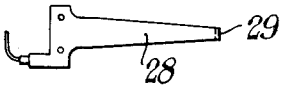

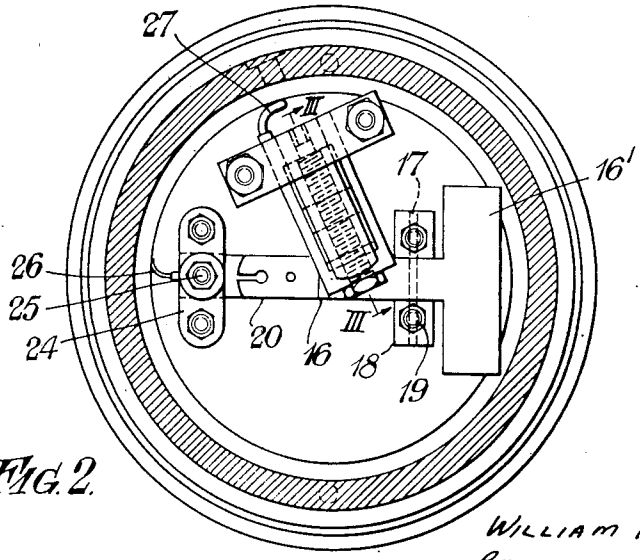

FIG. 2.

INVENTOR
WILLIAM HARRY RUFFLE
By:
Hamilton, Lake & Co.
AGENTS

Patented Oct. 16, 1951

2,571,617

UNITED STATES PATENT OFFICE

2,571,617

FLUID PRESSURE OPERATED SWITCH

William Harry Ruffle, Hove, England, assignor to Speed Development Company Limited, Hove, England

Application July 23, 1949, Serial No. 106,383
In Great Britain July 30, 1948

10 Claims. (Cl. 200—83)

1

This invention relates to fluid pressure operated switches adapted to respond to the influence of hydraulic or gaseous fluid pressure for making and/or breaking a circuit for apparatus actuated electrically, or for bringing into and out of circuit an electrically operated controller or other apparatus.

An object of the present invention is to provide a very sensitive and resilient switch which will respond to very small changes in pressure, in which a diaphragm is exposed to the pressure fluid which, e. g. can have an effective operative pressure as low as 0.5 inch W. G., and having means preventing overloading of the diaphragm so that it can be very thin and highly sensitive, so that, by way of example, the present switch is suitable for operating a stall warning signal on aircraft, that is to say, it will respond effectively to pressure obtained as a signal of the immediate approach of the stalling speed of an aeroplane.

Another object of the invention is to provide a highly sensitive fluid pressure operated switch in which a switch element resiliently loaded against the fluid pressure actuating the diaphragm will not transfer the load of the resilient means to the diaphragm otherwise than as a yielding load when the diaphragm is deformed by fluid pressure to displace a driver member operatively engaged with the said switch element.

A further object of the invention is to provide a switch in which the above-mentioned resiliently loaded switch member is loaded by a weight to counteract the effect of the weight of a driver member actuated by the deformations of the diaphragm and engaged operatively with said resiliently loaded switch member, so that the switch is not affected by changes from the normal travelling position of balance or poise of the craft.

A still further object of the invention is to provide means whereby very fine adjustments may be effected readily to the effective pressure or load opposing actuation of the switch by the fluid pressure.

Still further objects of the present invention will be apparent hereinafter when reference is made to the accompanying drawings illustrating an embodiment of the invention, and wherein,

Figure 1 is a sectional elevation of the switch.

Figure 2 is a section on the line II—II of Figure 1.

Figure 3 is a section on the line III—III of Figure 2, and

2

Figure 4 is an inverted plan view of a spring element of the switch.

Referring to the drawings the switch mechanism is housed within a cover cap 1 and an angle section base ring 2 threaded to the cap 1 as at 3 to grip in position a cylindrical base plug 4 and a disc 5 together with a sealing ring 6. Gripped between the opposed faces of the plug 4 and disc 5 is a flexible diaphragm 7, which, within the outer annular part gripped between the aforesaid members 4 and 5 is exposed for deformation by fluid pressure to a shallow concentric recess 8 in the plug 4, this recess 8 communicating via a passage 9 with a source of fluid pressure, and for this purpose a union 10 can be fitted in the plug 4 for connection by a suitable conduit to the source of fluid pressure. On the other side the diaphragm extends across a very shallow concentric recess 11 in the base of the disc 5, this recess 11 surrounding by a slight clearance a concentric shallow compartment 12 accommodating the disc-like head 13 of a stud 14 slidable through the centre of the disc 5. The flange 15 on the upper part of the stud 14, which rests upon the upper face of the disc 5 when there is no pressure upon the lower side of the diaphragm 7, prevents actual physical contact of the disc 14 against the diaphragm 7, or at most permits only light touch contact. The arrangement in any event being such that the deformation of the diaphragm due to fluid pressure will have to be exceedingly slight in order to ensure effective engagement between the diaphragm and the disc-like head 13 of the stud.

Also, the periphery of the disc-like head 13 has a quite narrow operative clearance from the cylindrical wall of the recess 12, so that there will be no deformation of the diaphragm otherwise than that which is effective upon the base of the disc-like head 13, excepting for the very narrow intermediate annular part of the diaphragm between its sealed outer annular part and the periphery of the disc-like head 13, this intermediate part merging smoothly into the central stud head engaging part. This manner of supporting the stud 14 with its head 13 ensures a highly sensitive response to the action of the diaphragm and relieves the diaphragm from harmful strain due to very heavy fluid pressure, so that the switch whilst being exceptionally sensitive can be employed in recording a drop in pressure in a circuit or container subjected to a very high fluid pressure. Likewise the plunger 15 acts as a positive stop preventing harmful deformation of the diaphragm by the spring

means, hereinafter described, which yieldingly opposes the action of the fluid pressure against the diaphragm. However, as previously indicated the switch of the present invention is adapted to be sensitive and highly responsive to a wide range of variations in pressures. For example, the pressure on the diaphragm which would maintain the stud 14 raised may be air pressure due to the speed of aircraft, so that when the pressure drops below a predetermined point a signal can be produced indicating that the aircraft is dangerously approaching the stalling speed of the aircraft.

The top of the stud 14 is brought to spherical form as shown to make point contact with a switch lever 16 fulcrumed on a pivot pin 17 secured at its ends in a pair of blocks 18 fixed to the disc 5 by studs 19. This lever 16 is a metal plate of substantially T configuration the centre limb part of which carries at its free extremity a resilient blade 20 having platinum or other suitable contacts 21 adapted to engage platinum or other suitable contacts 22 carried by a blade 23 secured to an insulator bridge 24 by a terminal screw 25 to which a lead 26 is taken to the appropriate part of the circuit of a warning or other suitable electrically operated device. The other electrical connection is taken off the switch by a lead 27 connected to a part of the switch mechanism hereinafter described which will form electrical connection with the lever 20 and which embodies means for varying the effective pressure of a leaf spring 28 upon the lever 16 between the fulcrum 17 and the contact carrier blade 23.

The leaf spring 28 together with another spring hereinafter described, yieldingly opposes the influence of the fluid pressure upon the stud 14 so that when the fluid pressure drops below a predetermined load the leaf spring 28 will bring the contacts 21 and 22 into engagement.

The object of making the switch lever 16 T shape, is to provide an easily standardised method of weighting the lever at one end, but of course other means can be adopted for this purpose. It will be seen by reference to Figure 1, which for the purpose of explanation might be regarded as the normal or upright position of the switch, that the transverse limb 16' assists in the "lift" or "off" movement of the lever 16, but in the event of the switch being turned upside down the counter-weight forming part 16' by reason of carefully predetermining its mass will neutralise the effect of the weight of the stud 14 and its flange 13 upon the lever 16.

The leaf spring 28 is downwardly bowed or cranked at its free end 29 to engage the lever 16 and at its other end is secured to one end of a block 30 fixed to the disc 5, the upper face of this block 30 being formed with a slight taper as indicated at 31 in Figure 3, thus providing a progressively changing narrow clearance between the lower face of the leaf spring and the upper face of the block 30. The adjustment of the effective load of the leaf spring upon the lever 16 is obtained by translating across the upper face of the leaf spring a square nut 32 having a bevelled lower edge 33 providing a line or chisel point contact with the spring. This nut is translated lengthwise of the spring by the rotation of a feed screw 34 guided between the opposed parallel sides of an oblong frame 35, pivoted at one end by a pin 36 engaged at its ends in the vertical limbs of an inverted U-shaped post 37. One end of the screw 34 is journalled in the pivoted end of the frame 35 and is provided with a square bore 38 for the reception of a tool for rotating the screw, the other end of the screw being supported by a reduced diameter portion 39 in a bush 40 threaded into the free end of the frame 35. Hence by careful adjustment of the bush 40 the screw 34 is held against axial displacement and is firmly supported for rotation thus ensuring extreme accuracy in the translative adjustment of the nut 32 for varying the effective length of the leaf spring 28.

The object of the leaf spring 28 is to provide for very fine adjustment of the effective pressure opposing the fluid pressure, and such adjustment is additive to the constant pressure of a leaf spring 41 upon the free end of the frame 35, one end of this leaf spring 41 being secured to the upper portion of the inverted U-shaped post 37 by a clamping bar 42 secured to the post 37 by studs 43.

If desired the interior of the cap housing member 1 can be fitted with a union 44 for the admission of static pressure to the interior of the housing, e. g. as when employing the device in conjunction with a Pitot tube or equivalent device upon aircraft.

It will be appreciated that the slight incline or bevel 31 given to the blocks 30 will assist in the firm support of the leaf spring 28 whilst permitting of a gradual deformation of such spring without imposing undesirable loads on the spring.

I claim:

1. A fluid pressure operated switch comprising a base structure, a fluid pressure receiving compartment, a fluid pressure inlet to said compartment, an imperforated diaphragm sealed completely around its periphery and disposed across said compartment so that only one side thereof is subjected to the direct impact of the fluid pressure from said inlet, a stud co-axial with the diaphragm and slidable through the base structure, a disc-like head on said stud opposed to but free of said diaphragm so as to be engaged by the diaphragm when the latter is deformed by the fluid pressure so as to urge the stud in the direction of deformation of the diaphragm, a very shallow compartment accommodating said disc-like head with a very narrow clearance from the periphery of said head opening into and concentric with and very narrowly axially spaced from the said fluid pressure receiving compartment so that the said head and the ambient part of the wall of the fluid pressure receiving compartment only permit of a very limited deformation of the diaphragm irrespective of the head of fluid pressure, an abutment on said stud which rests upon the base structure to relieve the diaphragm of pressure via the stud and its head when the diaphragm is not pressing against said head, a lever operated in one direction and engaged by said stud, contacts brought into and out of engagement by the movement of said lever, spring means yieldingly opposing the displacement of the lever by the action of the fluid pressure, and means neutralising the influence of the weight of said switch actuating member against the switch lever.

2. A fluid pressure operated switch according to claim 1 wherein said neutralising means applies to the lever a permanent load in one direction of operation whilst the lever is set in such direction.

3. A fluid pressure operated switch according to claim 1 wherein the said lever is counterweighted in a direction such that when the said switch occupies a position in which the switch

actuating stud will supplement any load due to fluid pressure upon the diaphragm the weight of the stud is neutralised.

4. A switch according to claim 1 wherein said lever arm is a metal strip with a contact moving part at one end and fulcrumed between its ends, its other end being subjected to said neutralising load, the said strip being engaged between its fulcrum and its contact moving part with the said stud, adjustable spring means urging the said strip into engagement with the said stud.

5. A fluid pressure operated switch according to claim 4, wherein the spring means loading the lever comprises a leaf spring supported at one end and free at its lever engaging end, said leaf spring being engaged by a relatively translatable abutment loaded against the leaf spring and manually controllable for varying its point of engagement with the leaf spring between the ends of the leaf spring to vary the effective load of the spring upon the said lever.

6. A fluid pressure actuated switch according to claim 5 wherein said abutment is a nut threaded upon a feed screw rotatable in a support shaped to guide the nut along the screw, said support for the feed screw being pivoted at one end and engaged at its other end by the said additional spring, whereby the said additional spring urges the said nut downwards against the said leaf spring engaging the switch member or lever.

7. A fluid pressure operated switch according to claim 6 wherein the leaf spring engaging the said lever extends for a portion of its length along a body member having an inclined surface opposed to the said spring whereby a shallow clearance is afforded for the deformation of the spring.

8. A fluid pressure operated switch comprising a switch body, a compartment in said body, an inlet to connect said compartment to the source of fluid pressure, a fixed contact, a switch contact lever adapted to engage said fixed contact, a diaphragm sealed off at its periphery across said compartment so as to be exposed on one face to the fluid pressure, a driver member engaged by the face of the diaphragm remote from the face receiving the fluid pressure and adapted to actuate said lever in one direction, spring means yieldingly opposing the displacement of the lever by the action of the fluid pressure, means neutralising the influence of the weight of said switch actuating member against the switch lever, positive stop means preventing overloading of the diaphragm by the spring means yieldingly opposing the action of the fluid pressure upon the diaphragm, and also positive stop means preventing overloading of the diaphragm by the action of the fluid pressure and further spring means additionally loading said spring means adjustably loading the lever, said further spring means having in itself a substantially fixed effective load upon the switch member or lever.

9. A fluid pressure operated differential switch comprising a switch base body, a housing sealed to said base body, a compartment in said body, an inlet to connect said compartment to a source of fluid pressure, an inlet in said housing to connect the interior of the housing to another source of fluid pressure to obtain a differential action, a fixed contact inside said housing, a lever arm inside said housing and pivoted between its ends, a contact on one end of said lever arm to engage said fixed contact, an imperforated diaphragm sealed off at its periphery across said compartment so as to be exposed on one face to the fluid pressure, a second compartment located in said base and exposed to the face of the diaphragm remote from the first mentioned compartment, a disc loose in said compartment with its periphery nearly contacting the surrounding wall of said second compartment, a driver member fixed to the centre of said disc and passing freely through the said base body and engaging the said lever, said driver member suspending said disc so that the disc is close to but applies no load to the diaphragm when the diaphragm is in its undeformed condition to obtain actuation of the said lever arm by fluid pressure applied to the diaphragm with very little deformation of the diaphragm, spring means yieldingly opposing the displacement of the lever by the action of the fluid pressure against the diaphragm, and means neutralising the influence of the weight of said switch actuating member against the switch lever.

10. A fluid pressure operated switch responsive to very low operative pressures, i. e. as low as 0.5 inch W. G., comprising a housing, a base to which the housing is sealed, switch mechanism within the housing, means to connect the interior of the housing to a source of fluid pressure, a diaphragm sealed at its perimeter in the base of the housing and exposed on one side to receive the influence of fluid pressure from another source, a switch actuating stud slidable through said base, a disc head on said stud, a compartment containing and closely surrounding the periphery of said disc head, the other side of the diaphragm being disposed in close proximity to said disc head to actuate the switch when the diaphragm is deformed against said disc head by fluid pressure, said stud transmitting the displacement of the diaphragm due to fluid pressure to the said switch mechanism, a switch lever arm pivotally supported in the housing, spring means loading said lever arm so as to yieldingly oppose the fluid pressure upon the diaphragm, contacts made and opened by movement of said lever arm, an abutment on said stud engaging said base to prevent the load of said spring means being transferred to the diaphragm when the diaphragm is not deformed by fluid pressure, means to effect fine adjustments of the effective load of said spring means against said lever arm, and means additionally loading said lever arm in a direction which neutralises the influence of the weight of the said stud and disc head upon the said lever arm when the switch unit occupies a position such that the weight of the stud and disc head supplements the load due to the fluid pressure on the said switch member.

WILLIAM HARRY RUFFLE.

REFERENCES CITED

The following references are of record in the file of this patent:

UNITED STATES PATENTS

Number	Name	Date
2,117,213	Rodanet	May 10, 1938
2,357,878	Crew	Sept. 12, 1944
2,362,869	Wade	Nov. 14, 1944
2,438,512	Mehut	Mar. 30, 1948
2,499,040	Steinback	Feb. 28, 1950