Feb. 17, 1931. H. J. GRAHAM 1,792,832

REFLECTOR MOUNTING FOR HEADLIGHTS

Filed Jan. 27, 1928 2 Sheets-Sheet 1

FIG. II.

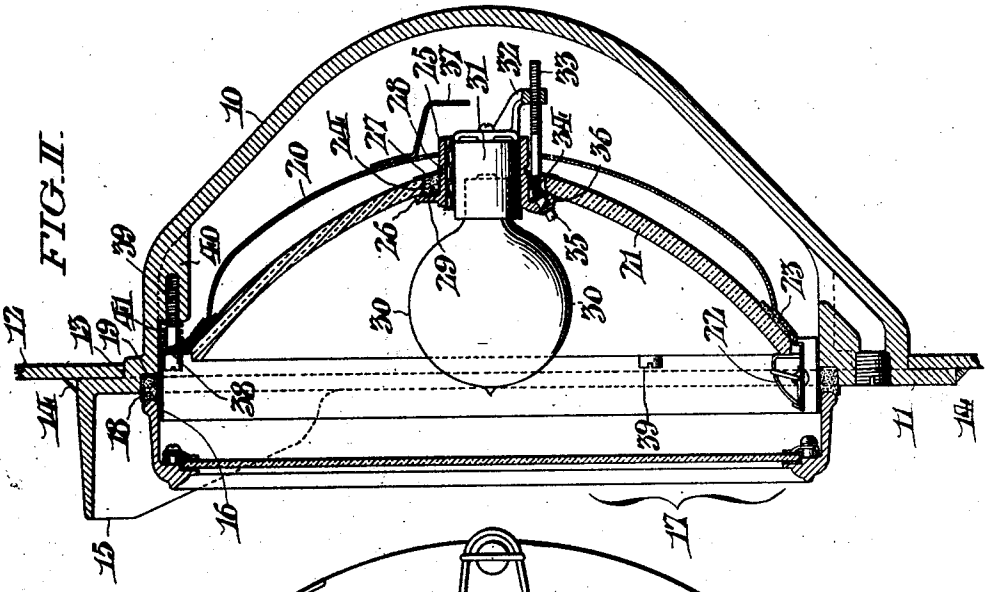

FIG. I.

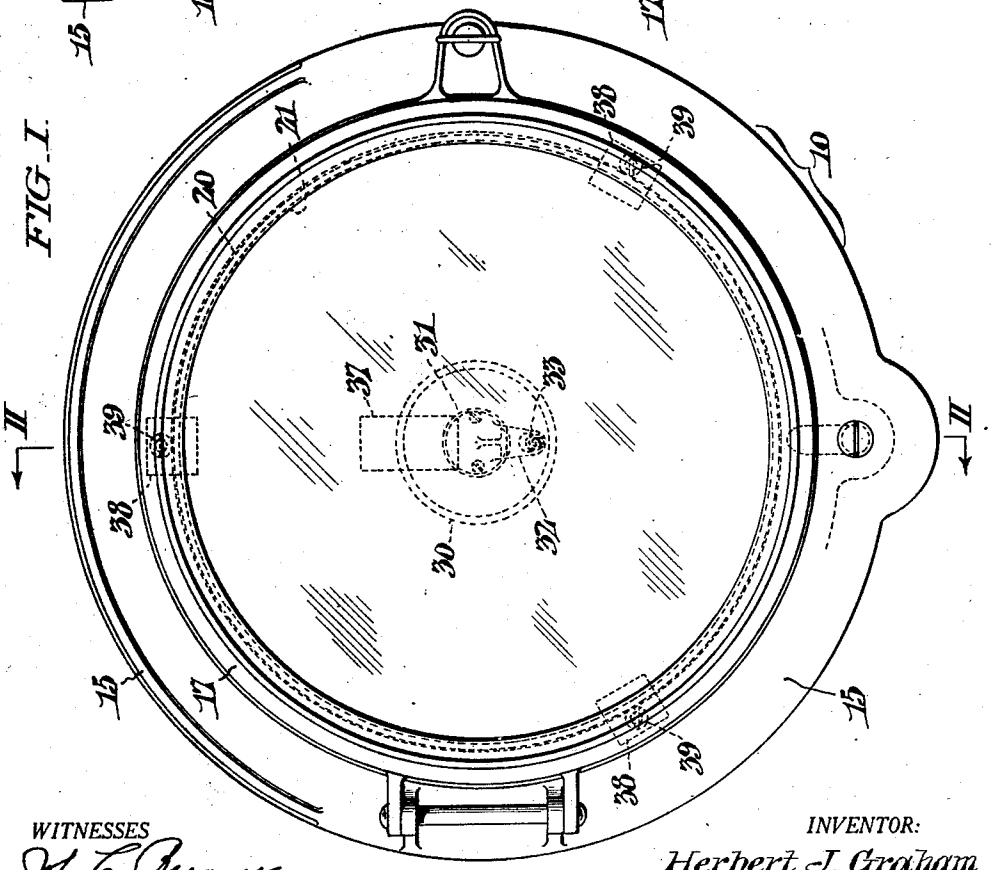

WITNESSES

John C. Bergner

George M. Neuschamp

INVENTOR:

Herbert J. Graham,

BY Fraley & Paul

ATTORNEYS.

Feb. 17, 1931. H. J. GRAHAM 1,792,832

REFLECTOR MOUNTING FOR HEADLIGHTS

Filed Jan. 27, 1928 2 Sheets-Sheet 2

FIG. IV.

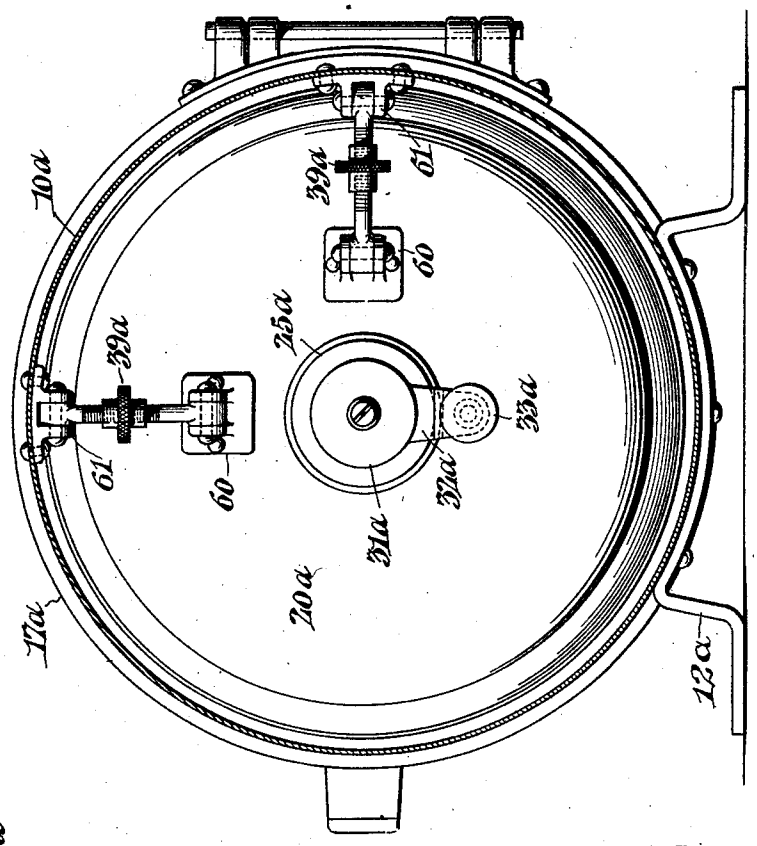

FIG. III.

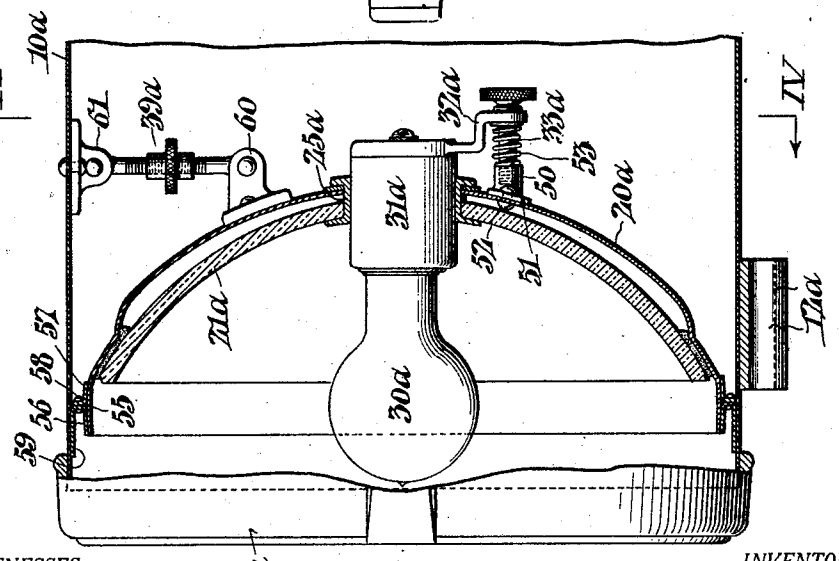

WITNESSES

John C. Bergner.

George M. Hunsberger

INVENTOR:

Herbert J. Graham,

BY Fraley & Paul

ATTORNEYS.

Patented Feb. 17, 1931

1,792,832

UNITED STATES PATENT OFFICE

HERBERT J. GRAHAM, OF PHILADELPHIA, PENNSYLVANIA, ASSIGNOR TO ELECTRIC SERVICE SUPPLIES COMPANY, OF PHILADELPHIA, PENNSYLVANIA, A CORPORATION OF PENNSYLVANIA

REFLECTOR MOUNTING FOR HEADLIGHTS

Application filed January 27, 1928. Serial No. 249,786.

This invention relates to reflector mountings intended more particularly for headlights such as commonly used on locomotives, railway cars, etc.

In connection with headlights of the kind referred to, I aim to provide a mounting capable of serving both the reflector and the associated illuminating means, while affording provisions to enable focal adjustment of the latter, as well as universal adjustment of both together so that the illumination may be projected from the headlight at any desired angle in the form of a properly concentrated beam.

Other objects and attendant advantages will be readily apparent from the detailed description hereinafter of the typical embodiments of this invention shown in the accompanying drawings.

Fig. I is a front view of a headlight equipped with my improved reflector mounting.

Fig. II is a section of the same view in accordance with the arrows II—II on Fig. I.

Fig. III is a sectional elevation similar to Fig. II showing an alternative embodiment of my invention; and,

Fig. IV is a transverse section taken as indicated by the arrows IV—IV in Fig. III.

With more detailed reference first to Figs. I and II, the headlight there shown has a convex body 10 with an integral face flange 11 surrounding its frontal opening. In the present instance the headlight is supported by a vertical plate 12 which is provided with an opening 13 to receive the body 10, with the circumferential surrounding flange 11 of the latter abutting the margin about said opening. The headlight may be secured to the plate 12 in any convenient way, for example by welding as conventionally indicated at 14. A forward projection 15 around the upper portion of the face flange 11 serves as a visor over the frontal opening of the body 10. An annular band 16 let into the frontal opening is permanently secured in place by welding or otherwise, and constitutes a forward extension of the body 10 which is circumferentially lapped by a hinged lens door 17. This door 17 closes against a weathering gasket 18 seated in an annular groove 19 afforded by the body 10 around the projecting band 16.

By virtue of being rigidly supported, the headlight obviously cannot be manipulated bodily to enable directional control of the projected light beam. To overcome this disadvantage I have devised an adjustable reflector mounting, the same comprising a supporting member 20 of sheet metal dished to the configuration shown in Fig. II in conformity with a parabolic reflector 21 which it carries. This reflector 21 is herein conventionally represented as being of glass although, if desired, other materials may be employed in its construction. Suitable means such as clip devices 22 are provided to removably secure the reflector 21 in place on the dished supporting member 20; and a suitable packing 23 is interposed to compensate for any irregularities thereby to protect the glass reflector 21 against strain and possible fracture. The reflector 21 is centrally apertured as shown at 24 in Fig. II to take a bushing 25 which is held in place through cooperation of an integrally-formed flange 26 which laps the margin around the aperture 24 at the front, and an annular sheet metal clamping member 27 sprung or wedged into a circumferential groove 28 of the bushing 25 to engage the reflector 21 at the back.

This arrangement is advantageous in that the bushing 25 may be shifted within the aperture 24 to enable its accurate placement in coincidence with the optical center line or axis of the reflector 21 through the focal point during initial assembling. To render the attachment permanent, a suitable self-setting cement or composition is subsequently forced into the voids around the bushing 25, as conventionally indicated at 29. An incandescent bulb 30 is in the present instance employed as a luminary source, the socket 31 of the bulb 30 being axially slidable in the bore of the bushing 25. To the rear end of the socket 31 is secured an arm 32 which is tapped for cooperation with an adjusting screw 33 that extends through the member 20. At the forward end, the screw 33 has a flexible connection 34 with a slotted head 35 which is rotata-

bly supported in an inclined bearing boss 36 of the bushing flange 26 so as to be readily accessible from the front of the reflector 21 without necessitating removal of the bulb 30 from the socket 31. With the means just described, the bulb 30 can be shifted along the focal axis of the reflector 21 until a concentrated beam of maximum intensity is had. To prevent the arm 32 from running off the screw 33, I secure to the back of the member 20 a stop 37 to limit inward movement of the bulb socket 31.

For the purpose of securing the supporting member 20 within the casing body 10 with capacity for universal adjustment so that the reflected beam may be projected at any desired angle from the headlight, provisions are made as follows: Extending outward from the periphery of the supporting member 20 at equidistant circumferential points (in the instance shown 120° apart) are ears 38 which are pierced for passage of headed adjusting screws 39 that take into bosses 40 integrally formed in the casing 10, see Fig. II. Helical compression springs 41 are interposed between the ears 38 and the bosses 40 so that contact is always maintained with the heads of the screws 39. By turning the screws 39 individually, it will be seen that the member 20 supporting both the reflector 21 and the illuminating bulb 30, can be universally tilted as, and for the purpose afore-explained. The screws 39 are readily accessible when the door 17 is swung to open position; and it is to be particularly noted that the reflector mounting 20 together with all its appurtenances is removable as a unit from the front of the casing 10. This not only facilitates assembling and wiring of the headlight initially, but enables replacements or repairs to be made with like ease, subsequently.

In Figs. III and IV, I have shown an alternative embodiment of my invention wherein all adjustments are made from the rear of the reflector 21*a*. The headlight in this instance has a cylindric body 10*a* which is sustained in upright position by a support 12*a* having the form of a foot bracket. The body 10*a* has a lens door 17*a* at the front, and is also accessible from the rear by means of a suitable closure, not shown. As before, I provide a dished member 20*a* to support the reflector 21*a*, the latter being centrally apertured as shown to take a bushing 25*a* which serves to axially guide the socket 31*a* incidental to adjustment of the illuminating bulb 30*a*. In the modified form of my invention, the adjusting screw 33*a* has a knurled head, and is rotatably engaged in the arm 32*a* extending from the rear of the bulb socket 31*a*. The screw 33*a* takes into a boss 50 which is flanged as at 51 to abut against the back of the member 20*a* whereto it is secured by rivets 52. A spring 53 is interposed between the boss 50 and the arm 32*a* to keep the latter at all times in contact with the knurled head of the screw 33*a*. The member 20*a* has a forward peripheral extension 55 (Fig. III) curved spherically from a center coincident with the focal point of the reflector 21*a*. As shown, the spherical extension 55 is engaged in the correspondingly shaped seat of a retaining annulus comprising two complemental parts 56, 57 which are secured together by rivets 58, one of said parts being formed with a forwardly-projecting circumferential flange 59 for permanent attachment within the casing 10*a*. Angular adjustment of the reflector-supporting member 20*a* is effected with the aid of screw means in the form of turn buckles 39*a* whereof only two are illustrated in Fig. IV as arranged in quadrant relation although more may be employed if found desirable or necessary. At opposite ends, the turn buckles 39*a* are connected to pivot fittings 60, 61 which are respectively riveted to the back of the reflector support 20*a* and the wall of the casing 10*a*. The manner of making the adjustments is so obvious as to preclude the necessity for separate detailed description.

Having thus described my invention, I claim:

1. A light projector comprising a mounting, a reflector, means to hold the reflector in place in the mounting, a socket and an illuminating bulb, a tubular element at the center of the reflector affording guidance for the socket and the illuminating bulb, and an adjuster screw including a flexible portion accessible from the front of the reflector, said screw co-operating with the socket for the purpose of moving the bulb along the focal axis.

2. A light projector comprising a mounting, a reflector, means to hold the reflector in place in the mounting, a tubular bearing at the center of the reflector, a socket and an illuminating bulb axially movable in the tubular bearing, said socket having a projection at the rear end, an adjuster screw including a flexible connection with a manipulating head rotatable in an inclined bearing at the front of the tubular guide, and said screw engaging a threaded orifice in the socket projection to enable focal adjustment without necessitating removal of the bulb from the socket.

3. A light projector comprising a frangible reflector, a dished member to support the reflector, an incandescent light and socket therefor, and means enabling adjustment of the incandescent light along the focal axis including an arm at the back of the socket having a tapped orifice, an adjuster screw engaging the tapped orifice with a flexible portion whereby it is manipulated, means operative to universally tilt the dished supporting member and reflector to determine the angle at which the reflected light beam

is projected, and said adjuster screw for the incandescent light and the means whereby the reflector support is tiltable all being accessible from the front of the light projector.

In testimony whereof, I have hereunto signed my name at Philadelphia, Pennsylvania, this 24th day of January, 1928.

HERBERT J. GRAHAM.