United States Patent Office

Des. 176,377

Patented Dec. 13, 1955

176,377

ROTARY WING AIRCRAFT

Peter J. Papadakos, St. James, N. Y., assignor to Gyrodyne Company of America, Inc., Flowerfield, N. Y., a corporation of New York

Application June 24, 1955, Serial No. 36,678

Term of patent 14 years

(Cl. D71—1)

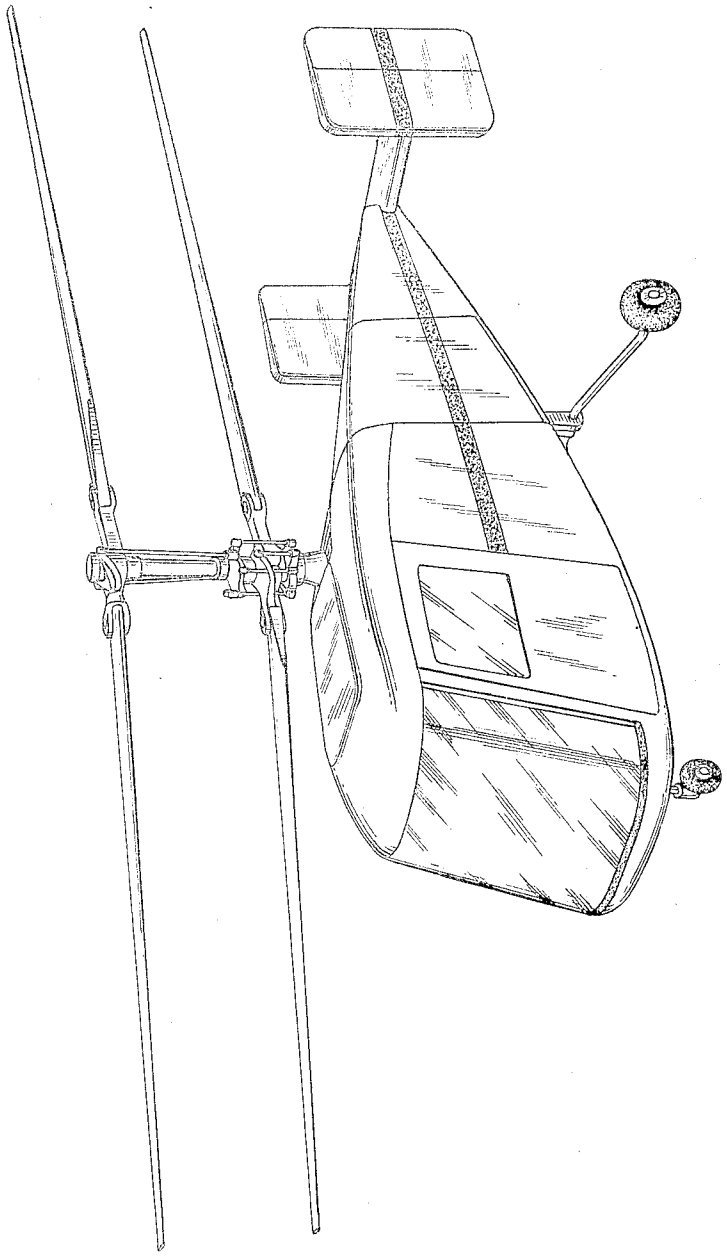

Fig. 1.

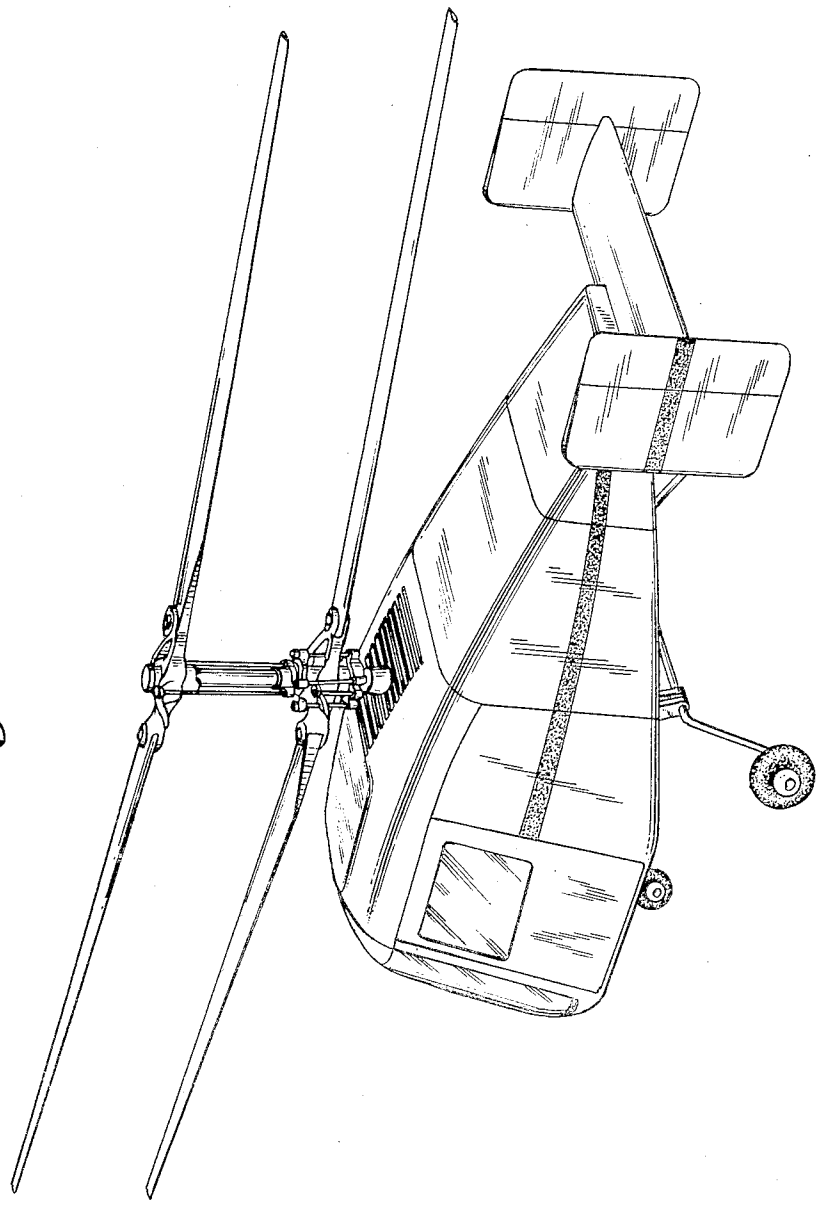

Fig. 2.

Fig. 1 is a front side perspective view of a rotary wing aircraft, showing my new design.

Fig. 2 is a rear side perspective view of the same.

The aircraft is symmetrical, the opposite side being essentially like the side shown in the drawings.

I claim:

The ornamental design for a rotary wing aircraft, as shown and described.

References Cited in the file of this patent

UNITED STATES PATENTS

D. 146,799	Larsen	May 20, 1947
D. 157,323	Barnett	Feb. 21, 1950
D. 168,652	Papadakos	Jan. 20, 1953
2,423,528	Stewart	July 8, 1947