Aug. 26, 1969 A. SOLER MARTI ET AL 3,462,984

SAFETY LOCK

Filed April 28, 1967 2 Sheets-Sheet 1

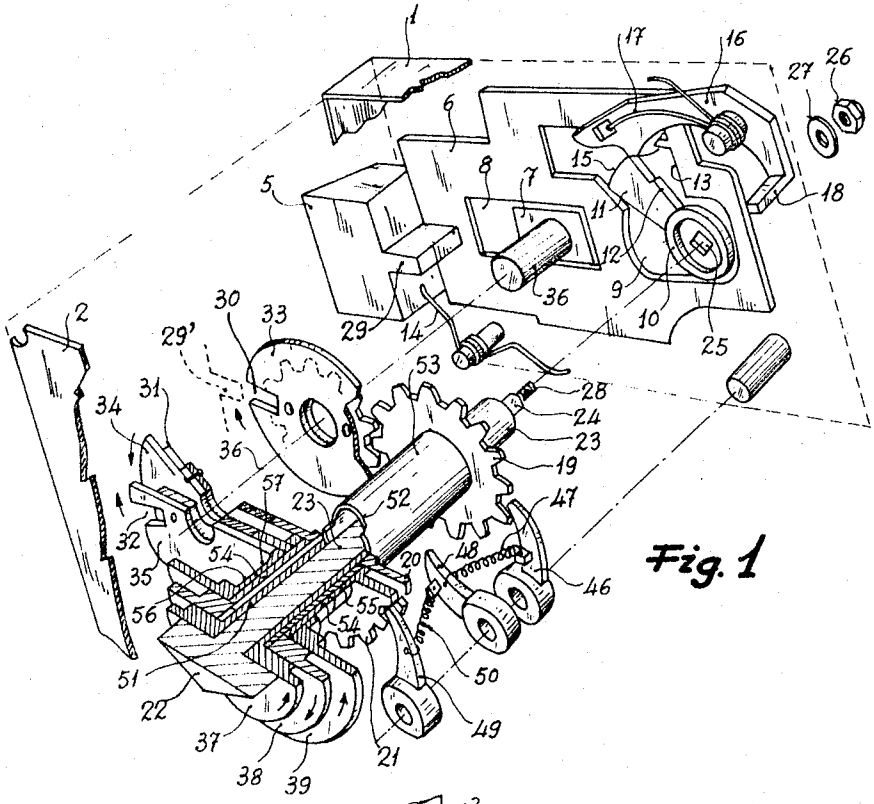

Fig. 1

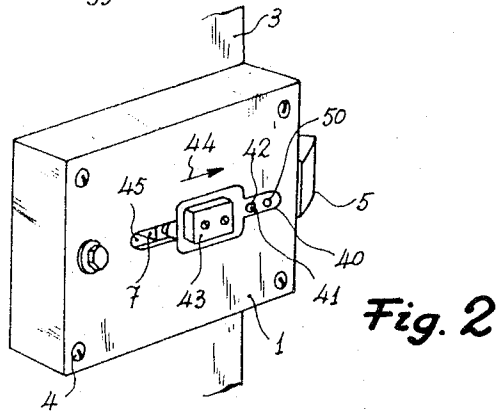

Fig. 2

Aug. 26, 1969 A. SOLER MARTI ET AL 3,462,984

SAFETY LOCK

Filed April 28, 1967 2 Sheets-Sheet 2

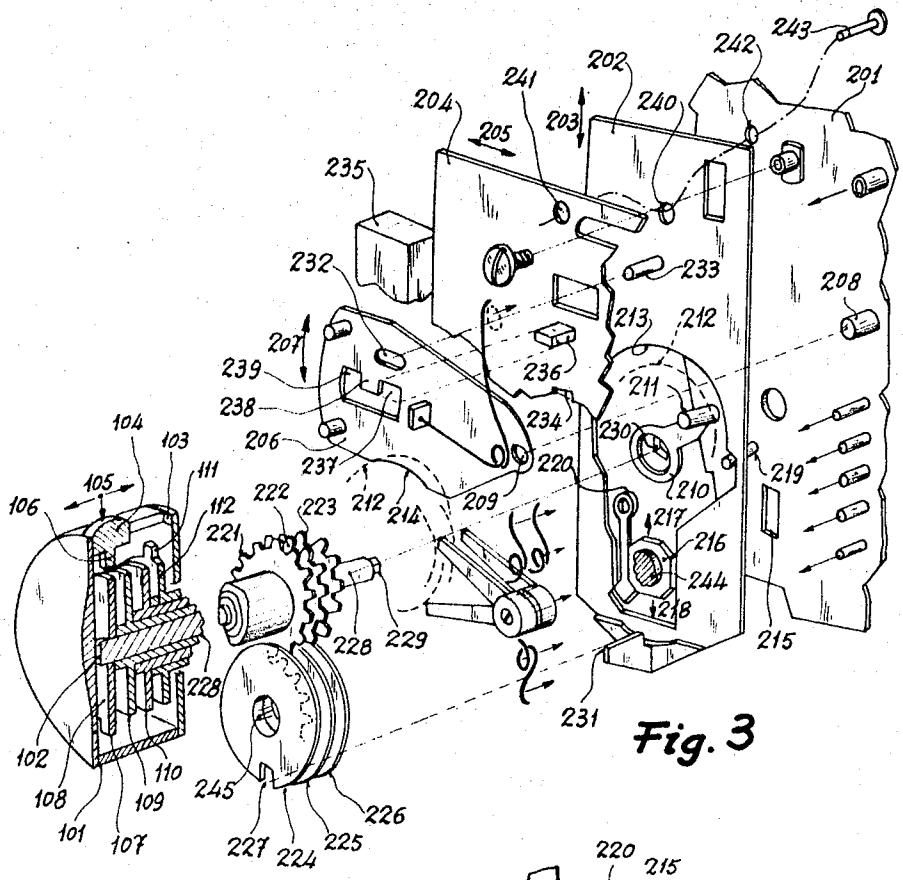

Fig. 3

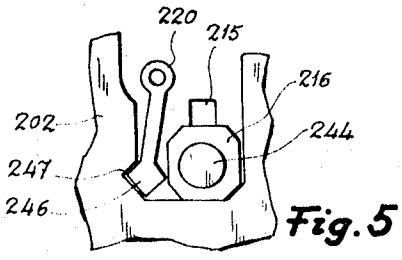

Fig. 5

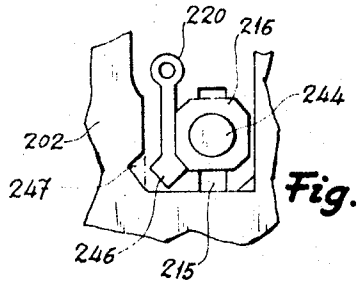

Fig. 4

United States Patent Office 3,462,984 Patented Aug. 26, 1969

3,462,984

SAFETY LOCK

Antonio Soler Marti, Juan Soler Marti, Jose Soler Marti, and Mario Soler Marti, all of Aldana 3, Barcelona, Spain

Filed Apr. 28, 1967, Ser. No. 634,671
Claims priority, application Spain, May 11, 1966, 326,591
Int. Cl. E05b 37/02, 37/00
U.S. Cl. 70—310 5 Claims

ABSTRACT OF THE DISCLOSURE

A combination lock is described which utilizes a first series of toothed wheels actuated by combination setting discs. A second series of wheels each of which has a notched plate attached thereto is operatively associated with the first series. The notches correspond to a protuberance on the bolt such that the protuberance will fit into the notches on the second series of wheels when all of the notches are in alignment. The second series of wheels is laterally moveable to disengage the two sets of wheels so that a combination can be set without the requirement for internal access into the lock.

The present invention is concerned with a lock mechanism which includes means which allow its operating and blocking without the necessity of a key.

The freeing of the means of operation of the mechanism for the opening of the lock depends on the independent angular position of a complex of discs, the relative position of the complex of these discs determining a combination easily retained in the memory of the user.

The mechanism likewise includes means to facilitate the turning of the discs in a form not visible to any person other than the user, the said means being housed in the interior of the knob of the lock.

Another important characteristic of the invention is based on the fact of it being possible to vary the combination of the lock without dismantling the latter. This is accomplished by means of the operation from the posterior part of the door of a device which temporarily frees the interior means of blocking of the combination means, thus making it possible to vary the angular position of the combination means relative to another angular position which corresponds to the new combination.

Another important characteristic of the invention is concerned with the incorporation of means which make it possible to place the mechanism in a blocking position when the bolt has been shot without the necessity of maintaining the combination necessary to open the lock.

The lock described in the present specification of invention likewise incorporates mechanical means which are known in this type of mechanism together with other new elements, necessary for its operation.

In what follows, a practical form for the industrial realization of the invention is described. In the description reference is made to the annexed drawings, and the said description is included merely by way of information and consequently is not in any way limitative of the invention.

In the said drawings:

FIGURE 1 shows a perspective view of the complex of the lock mechanism, in accordance with one form of realization, in which the elements appear in separated positions and duly arranged for their fitting together.

FIGURE 2 shows a posterior view of the lock, in accordance with FIGURE 1, already fitted up.

FIGURE 3 shows a view similar to that of FIGURE 1, of another form of realization of a lock mechanism

in accordance with the present invention into which certain improvements have been introduced.

FIGURES 4 and 5 correspond to two operating positions of the locking device.

Referring now to FIGURE 1, the lock is housed in a box 1 with its cover 2 which is supported on the surface of the door 3 to which four screws 4 fix it firmly.

In the interior of the lock there are two mechanisms: one of these is that which opens and closes the door, the other being that which authorizes or not the opening of the said door.

The mechanism for opening and closing the door is achieved by means of the displacement of the bolt 5 and its plate 6, guided in its movement by the opening of the housing 1, through which the bolt 5 emerges, by the block 7 situated in the hollow 8 of the plate 6, and by the hollow 9 which surrounds the eccentric piece 10 which is provided with the arm 11 whose edge 12 can push the edge 13 of the plate 6 and thus bring about its displacement, overcoming the action of the spring 14.

The movement of the eccentric piece 10 causes the edge 15 to raise the lever 16, overcoming the action of the spring 17 so that the transversal arm 18 will be moved towards the eccentric piece 11 and will block the turning of the toothed wheels 19, 20 and 21 belonging to the mechanism of the combination of the lock.

The turning of the eccentric piece 11 is achieved by operating a knob 22 (drawn in diametrical section which forms a solid piece with a shaft 23 the end of which is a section) in the form of a prism 24 which fits into the housing 25 of the eccentric piece 11 and is finally fixed by a box nut 26 with its washer 27 which is screwed into the threaded end 28 of the shaft 23.

The movement of the bolt 5 is possible provided that the piece 29 can penetrate into the grooves 30, 31 and 32 in wheels 33, 34 and 35 which can turn freely on a common shaft 36.

When the grooves 31 and 32 occupy the position indicated for the groove 30, the piece 29 of the bolt 5 occupies the position 29', shown by a broken line, and can then penetrate into the three grooves. When the three wheels 33, 34 and 35 do not simultaneously present their grooves 30, 31 and 32 facing the piece 29, the bolt 5 cannot enter the housing 1 and the lock is in its closed or locked position.

The mechanism of the combination is constituted by the three wheels 33, 34 and 35, which mesh with the three wheels 19, 20 and 21. The latter are coupled in turn to three operating discs, 37, 38 and 39, which are provided with suitable marks in order to enable their angular position to be recognized.

In order to introduce a combination into the lock mechanism, the shaft 36 is moved parallel to itself so that the wheels 33, 34 and 35 cease to mesh respectively with the wheels 19, 20 and 21. This movement is achieved (FIGURE 2) by separating the elastic tongue 40 so that a small pivot 41 of the posterior part of the housing 1 enters the orifice 42; this is achieved by pushing the guide piece 43 in the direction indicated by the arrow 44. Then the block 7 moves along the guide-groove 45 causing the shaft 36 and the wheels 33, 34 and 35 to move likewise. The said wheels should naturally present their grooves 30, 31 and 32 in order to cover the piece 29 of the bolt 5. The combination is then introduced into the lock by rotating the disc 37 in a counter-clockwise direction for the number of teeth of the wheel 19 desired, the teeth being retained by the catch 46 joined by a spring 47 to another catch 48 which remains motionless until the disc 38 is moved in a clockwise direction, as shown by an arrow. When disc 38 is moved in this manner, the wheel 20 situated in the same plane is permitted to ad-

vance tooth by tooth. In this manner the disc **38** is also brought to the position corresponding to the combination desired.

If the disc **39** is rotated the wheel **21** will be moved in a counter-clockwise direction, tooth by tooth, as is permitted by the catch or pawl **49**, until it occupies the desired position in the combination.

Having situated the discs **37**, **38** and **39** in the key positions so that the sliding piece **5** can be operated, the tongue **40** (FIGURE 2) is raised, the piece **43** and the block **7** are caused to slide in a direction contrary to that of the arrow **44** until the teeth of the wheels **33**, **34** and **35** mesh with the teeth of the wheels **19**, **20** and **21**, at which moment the pivot **41** (FIGURE 2) will enter the orifice **50**.

In any other position of the discs **37**, **38** and **39** the piece **29** will not simultaneously encounter the three grooves **30**, **31** and **32**, and thus it will not be possible to open the door.

The movement of the knob of **22** to open the door gives rise to the movement of the lever **16** and thus the transversal arm **18** penetrated among the teeth of the wheels **19**, **20** and **21** immobilizes them even though the hand should inadvertedly touch one of the discs **37**, **38** or **39**, and so the combination necessary for the opening of the door is not disturbed.

The movement of the disc **37** is transmitted to a bushing **51** which is coaxially disposed about the shaft **23** and ends in notches which mesh in one single position with notches **52** in another bushing **53** which forms a solid part with the wheel **19**. The bushings **51** and **53** have the same diameter and are lined up so as to cover the shaft **23**.

The disc **38** forms a solid piece with a bushing or sleeve **54** which is coupled by means of notches to another bushing or sleeve **55** which in turn forms a solid piece with the wheel **20**. These said bushings or sleeves **54** and **55** are coaxially disposed about the previously mentioned bushings or sleeves **51** and **52**.

Lastly, the disc **39** has a sleeve or bushing **56** which is coupled, also by means of notches, with another bushing or sleeve **57** which forms a solid unit with the wheel **21**.

By loosening the nut **26** the complex of the knob **22** and the discs **37**, **38** and **39**, together with their bushings or sleeves, may be removed. The lid **2** may then be fitted to the housing **1**, and the whole complex may be fixed to a door **3** (FIGURE 2).

The concentric bushings or sleeves **51**, **54** and **56** are now introduced, as is the shaft **23**, through the hole made in the door for the lock and through the cover **2** until they mesh with the corresponding bushings or sleeves **52**, **55** and **57** and the prism shaped part **24** of the shaft **23** in the housing **25** of the eccentric piece **11**, there emerging through the posterior part of the housing **1** the screw **28** which receives the washer **27** and the box nut **26**.

In the form of realization of the invention corresponding to FIGURES 3, 4 and 5, the mechanism has been improved with various devices which endow the operation of the lock with greater elements of security.

In this case the lock consists of a housing **201**, on which there is supported a first plate **202**, which can move in the direction indicated by the arrow **202**. Disposed upon plate **202** is a second plate **204**, which can slide in the direction shown by the arrow **205**. Disposed on the plate **204** is a third plate **206** which can turn around the shaft **208** which penetrates its orifice **209** in the direction shown by the arrow **207**.

On the bottom **201** of the housing is disposed a piece **210** in the form of a handle with a projecting piece **211** which describes an arc of circumference **212** and thus can thrust against the edge **214** of the plate **206** so that the plate **206** can be made to travel in an upward direction.

On the bottom **201** of the housing there is also a guide-groove **215** along which a plate **216** may slide in two

fixed positions: one of these is raised as shown by the arrow **217**, while the other position is lowered, as shown by the arrow **218**. In the drawing the plate **216** is shown in its raised position.

Finally, member **220** is disposed about shaft **219**.

The control device of the lock consists of a knob **101**. The knob **101** has a cylindrical form and along the generatrix of the cylinder there is a groove **103** in which a button **104** can move, in accordance with the double direction of the arrow **105**, the said button **104** having in an interior prolongation a tooth or projecting piece **106** which can make contact, when the knob **101** is caused to rotate, with the lug or projecting piece **107** of the disc **108**, forming a solid piece with the shaft **228** and another similar projecting piece of the disc **109** not shown in the drawing, the said disc **109** forming a solid unit with the toothed wheel **223**. The said piece **106** may contact a projecting piece or lug, not shown in the drawing, of the disc **110** connected with the wheel **222**, or with the projecting piece **111** of the disc **112** which forms a solid piece with the toothed wheel **221**.

On opening the door the button **104** is moved with a finger to the position which is required so that its tooth **106** may push the tooth of the disc which it is desired to operate without it being possible for any other person to observe which disc is being moved, thus the secret of the combination of the lock is kept.

To the three toothed wheels **221**, **222**, and **223**, the three combination discs **224**, **225** and **226** have lined up their notches **227**, and on acting on the shaft **228**, its square shaped prismatic end **229** enters the opening **230**, of the piece **210**, causing it to turn, and the projecting piece **211** will describe the arc **212**. On thrusting against the edge **214** of the plate **216**, the orifice **232** is caused to push upwards the pin or stud **233** and the plate **202** rises, the blade **231** entering into the grooves **227** of the discs of the combination.

The projecting piece **211** connects with the piece **234** of the plate **204**, and this causes the said plate **204** to slide as shown by the arrow **205**, and the bolt **235** opens or closes the door.

The plate **204** has been able to move because its projecting piece **236** is no longer engaged in the hollow **237**. Since the plate **206** has been lifted, the projecting piece **236** can slide under the tooth **238**.

The two extreme positions of the projecting piece **211** correspond to the two extreme positions of the bolt **235** and in them plate **202** descends, separating the blade **231** from the grooves **227**, the combination discs **224**, **225** and **226** being now free to rotate, and thus the combination may be removed.

In each one of the extreme positions of the projecting piece **211**, the plate **206** will have descended and the projecting piece **236** of the plate **204** will have been housed, either in the hollow **237** or in the hollow **239**, and the lock wall remain blocked in its two positions, open or closed, until the discs **224**, **225** and **226** are once again situated in the position required by the combination which aligns the grooves **227**.

When it is desired to remove the existing combination and produce a new combination, it will be necessary, in the first place, to open the lock in order to situate the discs **224**, **225** and **226** with their grooves aligned facing the blade **231**. Under these conditions, on operating the knob on the shaft **228** and raising the plate **202**, the orifice **240** descends, lining up with the orifice **241** of the plate **204**, and with the orifice **242** of the posterior cover of the housing of the lock, it being possible under these conditions to insert a bolt or pin **243**, momentarily blocking the plate **202** in its raised position and the plate **204** in its open position. Under these conditions it is possible to cause the block **216** to descend along the groove **215** which serves as a guide, and thereby cause the shaft **244** to move; this shaft enters the central orifices **245** of the combination discs **224**, **225** and **226**, in whose grooves **227** the blade **231** is inserted deeper, the teeth of the

wheels **221**, **222** and **223** being freed from those corresponding to the discs **224**, **225** and **226**, shown in partial form by broken lines in the drawing and which continue to be aligned even though the position of the wheels **221**, **222** and **223** is varied, by handling the knob **101** with its button **105** to prepare a new combination.

On the plate **216** descending, it pushes the square head **246** so that it engages in the notch **247** and there is thus prevented false manoeuvre which would cause the plate **202** to descend, even though the bolt **243** were to be removed from the orifices **240**, **241** and **242**. When the block **216** is replaced in its raised position, where it is retained by a tooth, not shown in the drawing, the discs **224**, **225** and **226** mesh with the wheels **221**, **222** and **223** in their new combination position, and the square head **246** is no longer forced to make contact with the notch **247**. Thus, the plate **202** can descend if the bolt **243** is removed.

It is obvious that other variants of realization of this invention are possible, as likewise changes in the materials, forms and arrangement of its elements, provided that the said alterations are included within the fundamental characteristics of the invention.

What we claim is:

1. A combination lock comprising:

a housing;

a bolt having a protrusion thereon facing the interior of said housing;

actuating means for imparting transverse motion to said bolt;

biasing means for urging said bolt into an extended position;

a first solid shaft, one end of which is opertaively associated with said actuating means;

knob means rigidly attached to the other end of said first shaft, and disposed exteriorly of said housings;

a plurality of discs disposed between said knob and the exterior of said housing;

a first plurality of bushings, each of which is rigidly attached to a corresponding one of said plurality of discs, said bushings being coaxially disposed about said first solid shaft and extending into the interior of said housing;

notches described in the ends of said first plurality of bushings on the ends remote from said rigidly attached discs;

a second plurality of bushings corresponding in diameters to said first plurality of bushings and coaxially disposed about said first solid shaft;

notches described in said second plurality of bushings for fitting engagement with said notches in said first plurality of bushings;

a first plurality of toothed wheels, each of said plurality being rigidly attached to a corresponding one of said plurality of said second plurality of bushings;

a plurality of pawl means, each of said pawl means engageable with a corresponding one of said first plurality of toothed wheels;

a second rigid shaft;

a second plurality of toothed wheels rotatably disposed about said second rigid shaft, each of said second plurality of toothed wheels being engageable with a corresponding one of said first plurality of toothed wheels; and

a notched plate attached to each of said second plurality of toothed wheels such that said protrusion on said bolt can be inserted in said notches in said plates when all of the notches in said plate are in alinement.

2. The combination lock as described in claim **1** wherein said first solid shaft is attached to said actuating means by screw-thread means such that upon uncoupling of said screw-thread means, said first solid shaft and said first and second plurality of bushings coaxially disposed thereabout can be removed without disturbing the relative positions of the first plurality of toothed wheels.

3. The combination lock as described in claim **1**, wherein said second solid shaft, together with the second plurality of toothed wheels and plurality of notched plates associated therewith coaxially disposed about said shaft are capable of lateral motion for disengaging said second plurality of toothed wheels from said first plurality of toothed wheels.

4. The combination lock as described in claim **1**, and further comprising blocking means engageable with the teeth of said first plurality of toothed wheels and operatively associated with said actuating means for preventing rotation of said first plurality of toothed wheels when said first solid shaft is rotated by means of said knob for transverse motion of said bolt.

5. The combination lock as described in claim **1**, wherein said plurality of discs are of progressively increasing diameter as their position from said knob toward said housing.

References Cited

UNITED STATES PATENTS

757,733	4/1904	Frank	70—159
1,416,855	5/1922	Michalek	70—310
1,496,289	6/1924	Barker	70—146
1,571,125	1/1926	Lappas	70—4
2,679,743	6/1954	Quintero	70—129

MARVIN A. CHAMPION, Primary Examiner

ROBERT L. WOLFE, Assistant Examiner