March 24, 1931. C. F. LOGAN 1,797,430

APPARATUS FOR TREATING MILL ROLLS

Filed Feb. 23, 1929

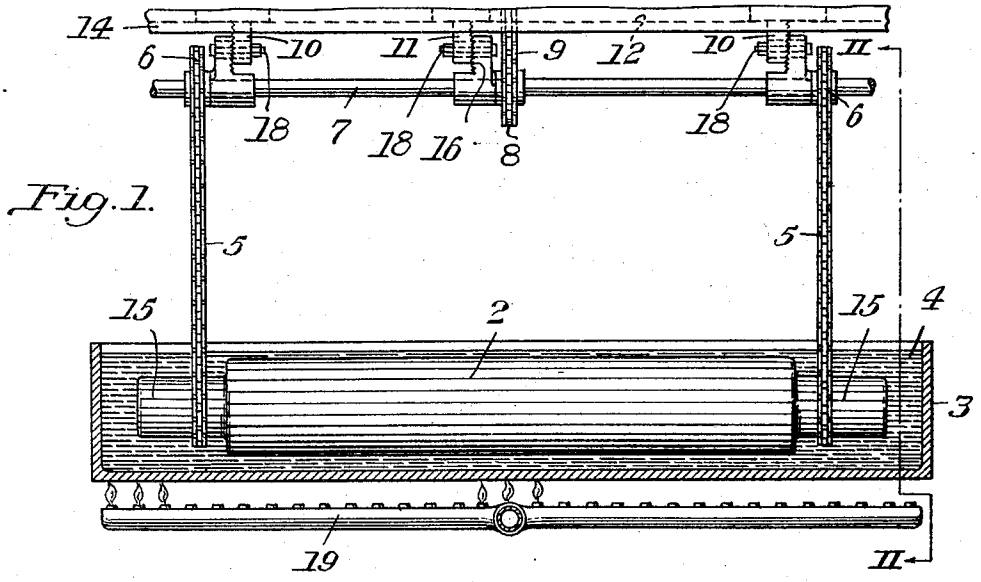

Fig. 1.

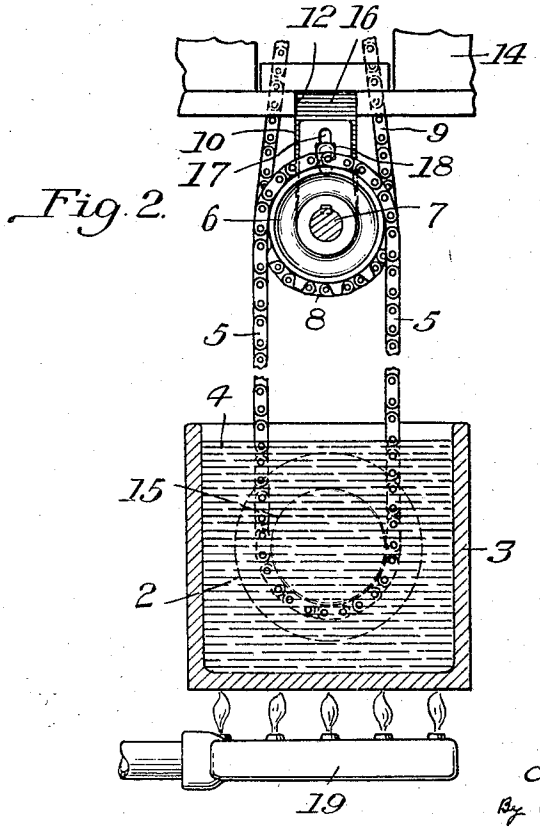

Fig. 2.

INVENTOR
Charles F. Logan,
By Byrnes, Stebbins & Parmelee,
His attorneys.

Patented Mar. 24, 1931 1,797,430

UNITED STATES PATENT OFFICE

CHARLES F. LOGAN, OF TAUNTON, MASSACHUSETTS, ASSIGNOR TO UNION ELECTRIC STEEL CORPORATION, OF PITTSBURGH, PENNSYLVANIA, A CORPORATION OF PENNSYLVANIA

APPARATUS FOR TREATING MILL ROLLS

Application filed February 23, 1929. Serial No. 341,920.

My invention relates to apparatus for treating mill rolls and more particularly to the heat treatment of such rolls.

In the art of manufacturing steel rolls of the character utilized in rolling mills, it is customary to cast a steel ingot, forge the same, thereafter subject the forged shape to a normalizing treatment under proper temperature conditions, and then the normalized shape is rough-turned and oil-quenched preparatory to a rough grinding. After rough-grinding it is subjected to a hardening process at a temperature of from 1550° to 1575° F., which gives a scleroscope hardness of around 110. As this hardness is too high for most rolling operations, it is customary to subject the roll to a drawing operation, after which it s given a finish grind.

Such rolls are of considerable diameter and are of considerable length. The overall length of such rolls is a matter of several feet. The drawing operation is usually carried out by inserting the roll in a vertical position into a bath of oil.

The depth of such a bath is considerable and a temperature gradient exists between the oil at the top of the tank and the oil at the bottom of the tank. As the temperature of the oil bath is hotter at the bottom than at the top, imperfect tempering and drawing of the rolls has resulted, because the resulting degrees of hardness along the rolls vary with the temperature gradient in the bath.

When such a roll is placed in operation it wears unevenly. If one end of the roll is too soft it wears away in use and if too hard it is liable to crack. Where unequal wearing takes place along the roll and sheet metal is being rolled, there is a likelihood of sheets being thicker along one edge than along the other.

I provide apparatus for drawing such rolls in which the roll is suspended in a horizontal position in a shallow tank. The depth of the tank is preferably made such as to just insure that the roll is completely submerged and it is possible to maintain such a shallow bath at substantially a uniform temperature as distinguished from having the temperature gradient which exists where the bath is several feet high.

I also provide means for rotating the roll while it is suspended in the bath. The relative positions of the ends of a roll in the bath can be adjusted so that small temperature differences which might exist in the bath are compensated for. The bath is heated by a source of thermal energy such as a burner.

The accompanying drawings illustrate the present preferred embodiment of the invention, in which

Figure 1 is a longitudinal view partially in elevation and partially in section of heat treating apparatus embodying my invention, and

Figure 2 is a transverse sectional view thereof taken substantially along the section line II—II of Figure 1.

Referring to the drawings, a roll 2 is suspended in a horizontal position in a tank 3 containing a bath of heat treating liquid 4 by chains or slings 5 driven by sprocket wheels 6 mounted on a shaft 7. Rotational movement is given the shaft 7 by a sprocket wheel 8 and a drive chain 9 connected to any source of power (not shown).

The shaft 7 is supported by brackets 10 and 11. The brackets 10 are movable along a guideway 12 formed in a supporting structure 14. The supporting structure 14 may be either stationary or constitute a portion of a traveling crane, as desired.

By adjusting the positions of the brackets 10 along the shaft 7 and the guideway 12, the positions of the chains 5 are varied to accommodate rolls of different lengths. The lengths of the rolls 2 vary considerably, although they are frequently made with an overall length of substantially nine feet. The ends 15 of the rolls are reduced for engagement with journals. The chains 5 are slipped over the ends 15 of the roll.

The brackets 10 and 11 are made in two parts which are provided with cooperating teeth 16 and are provided with slots 17 through which clamping bolts 18 extend. By adjusting the brackets 10 and 11 by means of the clamping bolts 18, the ends of the shaft 7 may be moved vertically so that the posi-

tions of the ends of the roll 2 may be varied slightly should it be found that the temperature of the bath 4 varies slightly at the ends thereof and at different distances from the tank bottom.

As the diameters of the rolls 2 are frequently of a magnitude in excess of a foot, a diameter of fourteen inches being not uncommon, the depth of the tank 3 is made such that the bath 4 completely covers the roll when the roll is positioned in the tank. Where a roll having a fourteen inch diameter is being treated, a tank having a height of eighteen inches is satisfactory.

It is to be understood that the foregoing numerical values are given by way of illustration of the invention and not by way of limitation, as the specific dimensions may be varied in accordance with the sizes of the rolls being treated.

The temperature of the bath 4 is maintained by a burner 19 disposed beneath the bath. By using a relatively shallow bath it is possible to maintain the temperature throughout the bath substantially uniform. Small differences in temperature between the ends of the bath may be compensated for by adjusting the relative positions of the brackets 10 and 11, although when the burner 19 provides a uniform flame throughout its length such adjustments are usually unnecessary.

If the supporting structure 14 is a traveling crane the chains 5 are placed over the ends 15 of the roll for lifting and conveying the roll to the bath. After the roll is in the bath the shaft 7 is rotated to cause the roll 2 to slowly turn in the bath as the chains 5 move. By rotating the roll while in the bath, all portions of the roll are subjected to the same heat treatment. Hence the possibility of one part of the roll remaining in a zone of different temperature than another part is eliminated. A roll so treated is subjected to uniform temperature throughout its length, thereby insuring a uniform drawing temperature throughout the roll.

While I have shown and described the present preferred embodiment of the invention, it is to be understood that it may be otherwise embodied within the spirit of the invention and the scope of the appended claims.

I claim:—

1. Heat treating apparatus for rolls comprising a horizontally extending shallow tank, means for heating the tank, a shaft, driving members mounted on the shaft, vertically and longitudinally adjustable supports for said members, and slings depending from said driving members for supporting and rotating a roll while submerged in the bath.

2. Heat treating apparatus comprising a tank, means for supporting a roll in the tank comprising slings extending into the tank, means for imparting a turning movement to the slings, means permitting relative movement of the slings to compensate for difference in the length of rolls being handled, and means permitting relative adjustments of the slings in a vertical plane.

In testimony whereof I have hereunto set my hand.

CHARLES F. LOGAN.