J. A. McDONALD.

SUPPORTING SHELF.

APPLICATION FILED DEC. 20, 1913.

1,116,091. Patented Nov. 3, 1914.

Fig. 1.

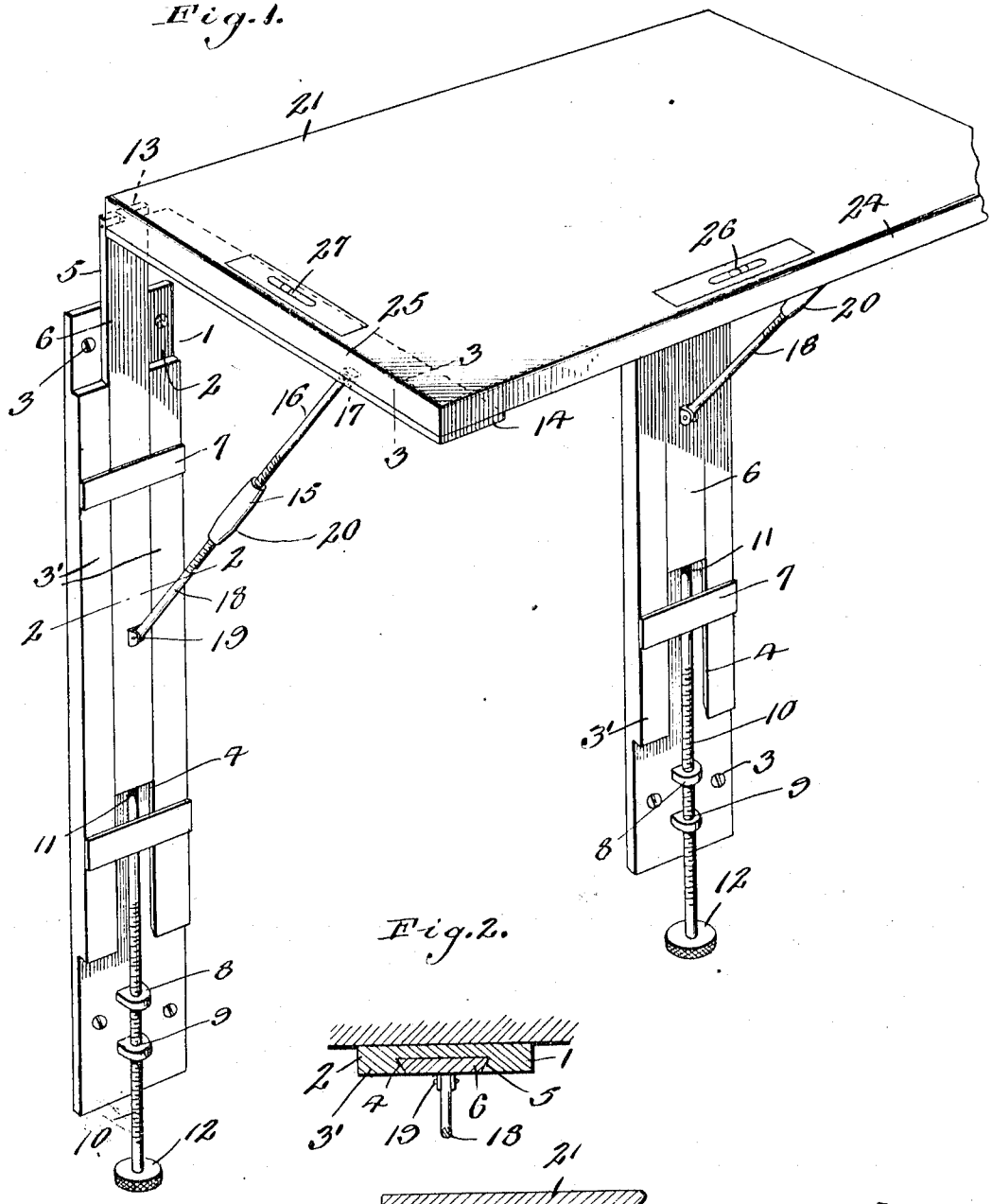


Fig. 2.




Fig. 3




Witnesses

E. Andrews Jr.

James A. Kochs

Inventor

J. A. McDonald,

By Victor J. Evans

Attorney

# UNITED STATES PATENT OFFICE.

JOHN A. McDONALD, OF MOSTYN, TEXAS.

## SUPPORTING-SHELF.

1,116,091. Specification of Letters Patent. Patented Nov. 3, 1914.

Application filed December 20, 1913. Serial No. 807,985.

*To all whom it may concern:*

Be it known that I, JOHN A. McDONALD, a citizen of the United States, residing at Mostyn, in the county of Montgomery and State of Texas, have invented new and useful Improvements in Supporting-Shelves, of which the following is a specification.

This invention relates to supporting shelves and particularly to a combined leveling and supporting shelf for clocks; and it has for its primary object the provision of means whereby the shelf may be adjusted so that the clock may be properly balanced.

With the above and other objects in view, the invention consists of certain novel features of construction, combination and arrangement of parts, as will be hereinafter described and claimed.

In the accompanying drawings:—Figure 1 is a perspective view of the shelf; Fig. 2 is a horizontal section, taken on the line 2—2 of Fig. 1; and Fig. 3 is a section, taken on the line 3—3 of Fig. 1.

The shelf comprises a pair of supporting brackets 1—1 each consisting of a vertical attaching plate 2, which may be secured to the wall by means of suitable fastenings 3. Said plate is provided with a pair of guides 3′ having undercut edges 4 that overlap similar undercut edges 5 formed on the sides of a vertically adjustable plate 6.

Cross bars 7 connect the guides 3′ with each other, and as shown said bars extend transversely over the forward surface of the plate 6 whereby to strengthen the latter and prevent the same from pulling away from the guides. The lower end of the attaching plate 2 is provided with a pair of vertical alined lugs 8 having threaded passages 9, which accommodate a correspondingly threaded adjusting screw 10. This screw is extended at its upper ends between the guides 3′, and as shown the extremity of the screw engages at 11 against the lower edge of the plate 6 so that the latter may be moved in a vertical direction on rotation of said screw. The screw is provided with a suitable manipulating head or knob 12 at its lower end which is extended below the lower end of the plate 2 whereby the screw may be freely operated by the hand.

The plate 6 is hingedly connected at 13 with a horizontal plate 14, and as shown the latter is connected with said plate 6 by a turn-buckle 15. The section 16 of the turn-buckle is operatively connected at 17 with the plate 14, while the section 18 of said turn buckle is operatively connected at 19 with the plate 6. The meeting ends of the sections 16 and 18 are connected by a suitable adjusting nut 20 which may be turned by the hand so as to cause a relative separation of the sections 16 and 18 and effect different angular adjustments of the plate 14 relatively of the plate 6. The plates 14 of the companion brackets 1—1 are connected together by a support 21 having lugs 22, which are freely fitted in relatively large openings 23 in the plates 14. The support 21 is respectively provided along its edges 24 and 25 with spirit levels 26 and 27 of any suitable well known form.

From the construction herein set forth, it is obviously seen that a clock may be mounted upon the support 21 and the adjusting means 10 and 15 operated so that the support 21 will be level and operatively balanced and set up to the moving parts of the clock.

From the foregoing description, taken in connection with the accompanying drawings, the construction and operation of the invention will be readily understood without requiring a more extended explanation.

Various changes in the form, proportion and the minor details of construction may be resorted to without departing from the principle or sacrificing any of the advantages of this invention as claimed.

I claim:—

A device of the character described comprising an attaching plate, a member movably mounted in said plate, means on the plate for moving the member, a support hingedly connected with the member, and means between the support and the member for moving the former.

In testimony whereof I affix my signature in presence of two witnesses.

JOHN A. McDONALD.

Witnesses:

HERBERT DECKER,

D. O. BENDER.