Aug. 17, 1926. 1,596,161

W. A. DOREY

LUMINAIRE

Filed Oct. 21, 1924 2 Sheets-Sheet 1

FIG 1

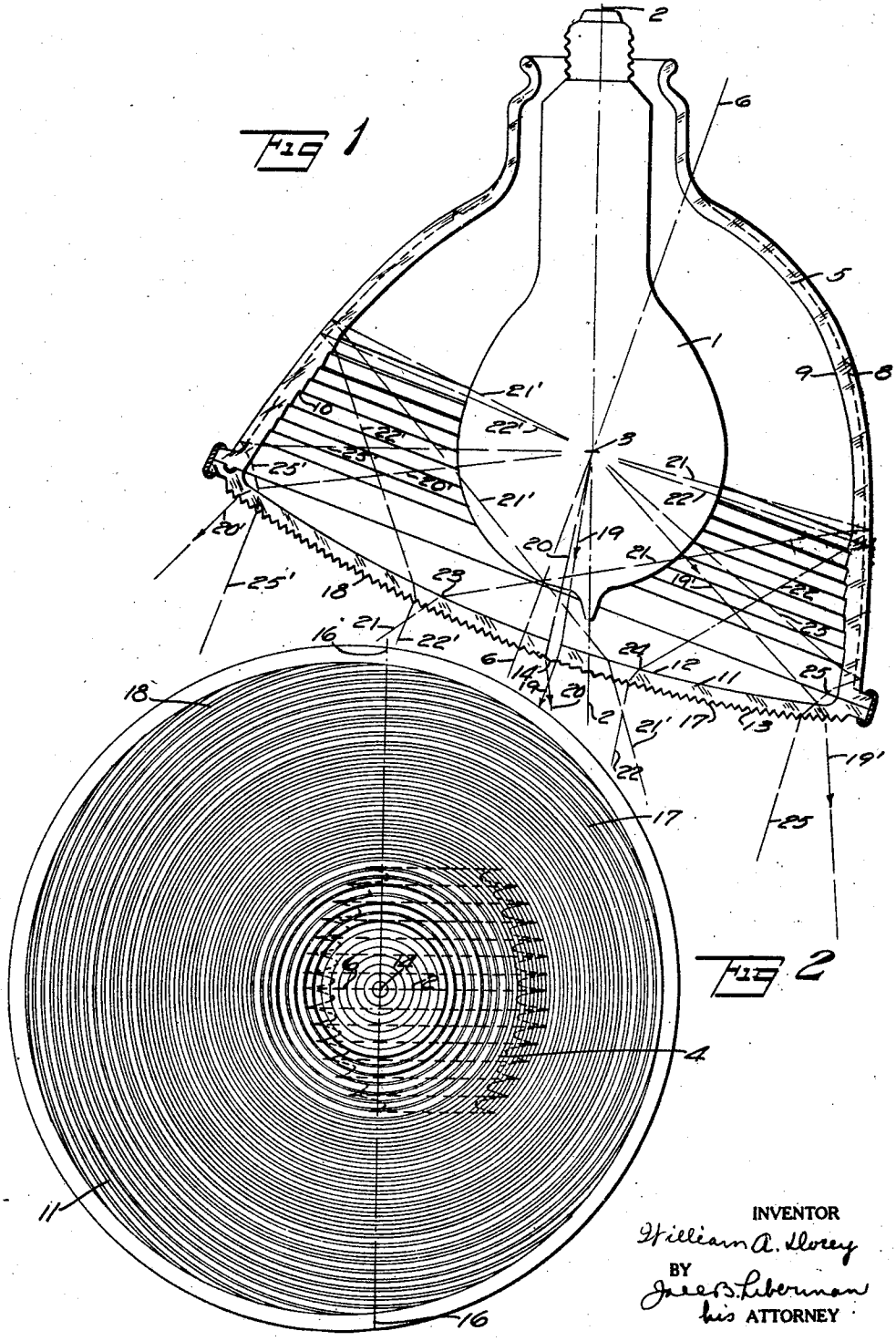

FIG 2

INVENTOR
William A. Dorey
BY
Jacob B. Liberman
his ATTORNEY

Aug. 17, 1926. 1,596,161

W. A. DOREY

LUMINAIRE

Filed Oct. 21 1924 2 Sheets-Sheet 2

FIG 3

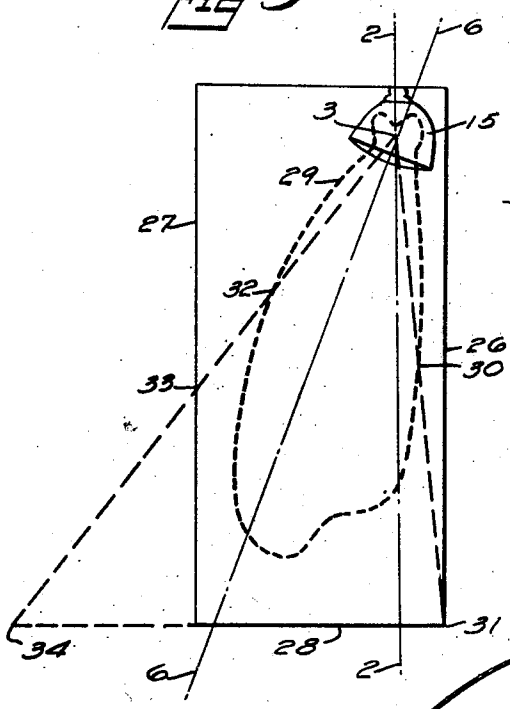

FIG 4

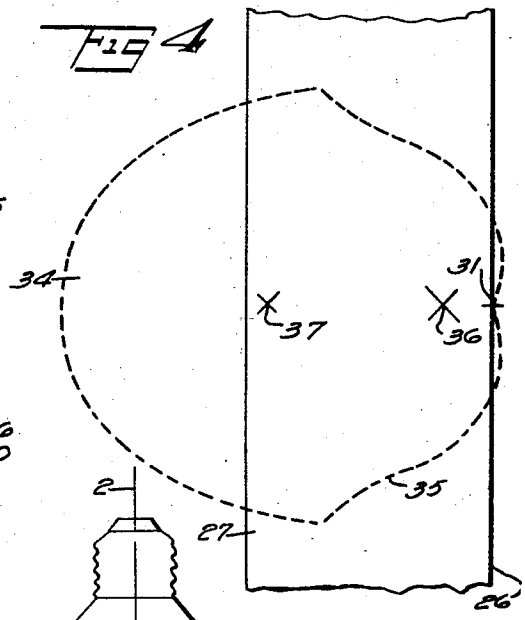

FIG 5

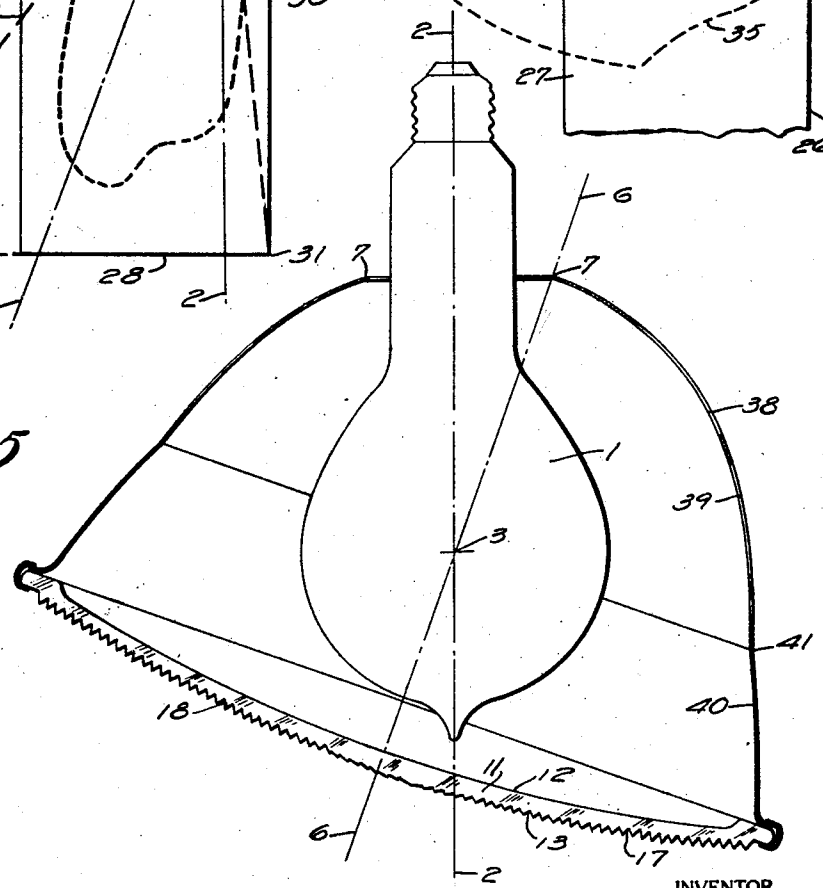

INVENTOR

William A. Dorey.

BY

Jules S. Silverman

his ATTORNEY

Patented Aug. 17, 1926.

1,596,161

UNITED STATES PATENT OFFICE.

WILLIAM A. DOREY, OF NEWARK, OHIO, ASSIGNOR TO HOLOPHANE GLASS COMPANY, OF NEW YORK, N. Y., A CORPORATION OF NEW JERSEY.

LUMINAIRE.

Application filed October 21, 1924. Serial No. 744,882.

The object of this invention is the manufacture of a luminaire embodying a reflector with a refracting cover giving a concentrated distribution of light with a relatively small diameter. This is preferably accomplished by the use of a glass reflector having radial double reflecting prisms on its outer surface and horizontal refracting ribbings on a portion of the inner surface, so arranged with reference to the light source and the general contour of the glass that the reflected light is emitted at a depressed angle relative to the emission angle which would be secured without the use of such ribbings. A refracting screen is placed over the face of the reflector having concentric refracting prisms on its outer surface so formed as to concentrate light received direct from the lamp, as well as light reflected back across the axis by the reflector, and at the same time from the section of the intermediate surfaces of the prisms giving further depression or concentration to the light emitted from the horizontal ribbings on the inside of the reflector. This construction is especially adapted for use in lighting show windows where the greatest intensity is required immediately below the source with considerable intensity up to high angles within the window and a rapid falling off of intensity on the side toward the window glass.

To satisfy this requirement more fully the axis of the reflector is placed at a considerable angle to the axis of the light source, so that the average emission of both direct and reflected light is well within the window. The prismatic corrugations on the screen are then centered at a point between the axis of the reflector and the lamp axis and the prisms on the shop side of the screen formed so as to permit a moderate concentration upward and inward from the vertical while the prisms on the street side of the screen are formed to give a greater degree of concentration in a generally vertical direction.

Fig. 1 is a vertical cross section of a typical form of light enclosure embodying my invention, for use in window lighting. This cross section is in a plane at right angles to the front of the window;

Fig. 2 is a plan of the plate shown in Fig. 1;

Fig. 3 is a graphical representation of a vertical cross section of the window showing the luminaire in place and the distribution of intensity from the luminaire;

Fig. 4 is a diagrammatic plan of the bottom of the window showing the form of the spot of light produced by one luminaire.

Fig. 5 is a cross section of a modification in which a metal reflector is substituted for the prismatic reflector shown in Fig. 1.

In Fig. 1, 1 is an incandescent lamp lying in the vertical axis 2—2, with the source at 3 considered for the sake of simplicity as a point. 5 is a glass reflector with its axis in the line 6—6 at an angle with lamp axis 2—2. The opening 7—7 is to take the neck of the lamp and permit the adjustment of a suitable support for the glass and is symmetrical with reference to axis 2—2. The outer surface of the glass is covered with vertical double reflecting prisms 8, the inner surface 9 of the upper portion being smooth. The inner skirt of the reflector is provided with transverse refracting corrugations 10. 11 is a shallow glass cover for the mouth of the reflector which is shown in plain in Fig. 2. The inner surface 12 may be smooth or provided with shallow flutings 4 parallel to the plane containing axes 2—2 and 6—6 to give an element of lateral diffusion to the emitted light. The outer surface 13 consists of concentric prisms having their common center at 14 which lies between axes 2—2 and 6—6. The concentric prisms are divided into two sections 17 and 18 as shown in Fig. 2 separated by a line 16—16 parallel to the front of the window and passing through the center 14.

Typical light rays 19—19′ proceeding from the source direct to section 17 of the cover will be refracted downward, in a general vertical direction so as to produce a highly concentrated beam of light. Typical rays 20—20′ proceeding from the source direct to section 18 of the cover will be refracted downward, those emitted near the center 14 being substantially vertical and those emitted near the edge of the cover be-

ing gradually higher in angle. Typical rays 21—21′ proceeding from the source and striking the smooth portion 9 of the reflector will be reflected back across the axis and strike the cover at such angles that they will be acted upon by the prismatic surfaces in substantially the same way as the direct light. The rays 22 and 22′ emitted by the source at angles immediately below rays 21 and 21′ will strike the uppermost of the annular prisms 10 and be reflected at a much lower angle than rays 21 and 21′ so that the reflected rays will not cross the reflector axis within the cover but will be intercepted by the adjacent sections and refracted in generally downward directions by the intermediate prismatic surfaces which are in general inactive with reference to the direct light. Reflected ray 21 is the limit of light received from the smooth portion of the reflector. It passes into the cover at 23 and is acted upon by the prisms in section 18 in the same manner in which these prisms act upon the direct light with the exception that owing to the higher angle of incidence the light is emitted at a higher angle with the vertical. Reflected ray 22 is the extreme limit of light emitted by the portion of the reflector having the interior corrugations 10 on the inner surface. It passes into the cover at 24 to the prisms in section 17. The direct light received from the source at this point is at a considerable angle with the axis of the luminaire 2—2 and therefore the intermediate surfaces between the refracting surfaces handling the direct light will be placed at a sufficient angle so as to act usefully in refracting the redirected ray 22. In that portion of the cover lying between the prism center 14 and point 24 the intermediate surfaces cannot be made to handle light reflected from the reflector efficiently without undue loss of the light direct from the source. It is therefore desirable to keep the amount of reflected light within this region as low as possible and this is accomplished effectively by the use of interior angular corrugations which cause a definite gap in the flux of the reflected light.

Light rays emitted above 21 and 21′ will be reflected in the same general manner except that the rays emitted at higher angles with reference to the source will be reflected at angles nearer to the path of direct emission. Rays emitted from the source at lower angles than 22 and 22′ and striking the skirt of the reflector will be reflected and refracted similarly. The rays 25 and 25′ intercepted by the lowest of the prisms 10 are reflected to the outer edge of the cover and refracted downward as shown.

Fig. 3 is a diagrammatic vertical cross section of the window in which 15 is the luminaire shown in Fig. 1, 26 is the front of the window, 27 is the back of the window and 28 the floor of the window. 2—2 is the lamp axis extended and 6—6 is the luminaire axis extended. The dotted line 29 represents graphically the distribution of intensity about the luminaire in that any straight line running from the source 3 to this line 29 has a length proportionate to the intensity in the direction of that straight line. One such line is shown at 3—30 which when extended meets the intersection of front wall 26 and floor 28 at the point 31. The straight line 3—32 is equal in length to 3—30 and when extended meets the back wall 27 at point 33 and the floor extended at 34. Then the intensity delivered at 33 or at 34 will equal the intensity at 31 and at intermediate points the intensity will be greater as indicated by the curve 29.

Fig. 4 is a diagrammatic plan of a window in which 26 is the front of the window and 27, the back of the window. The dotted line 35 is the intercept at the floor of the window of rays of light from the source equal in intensity to rays 3—30 and 3—32 in Fig. 3. At all points on the floor within this line the intensities are greater. Line 35 therefore, will indicate the general shape of the spot of light received from the luminaire but it should be understood that this is not a strongly marked line of division between brightness and darkness. 36 is the intercept of the vertical axis 2—2 and 37 is the intercept of the luminaire axis 6—6.

Referring to Fig. 3 it will be noted that the intensity falls off very rapidly in front of the vertical lamp axis 2—2 and falls off gradually back of the luminaire axis 606. Referring to Fig. 4 it will be noted that the lobe of the light spot toward the window front is relatively shallow and that the lobe of the spot toward the window back is relatively deep. In a window of the shape shown the back part of the spot will of course not reach the floor but will illuminate the back of the window.

In Fig. 1 where the reflector is made of pressed glass it is desirable to have a continuous outside contour and obtain the sharp change in direction of reflected light by the use of transverse depressing prisms on the interior of the skirt part. When metal or thin blown glass reflectors are used however it is preferable to obtain the sharp change required in the direction of the reflected part by means of a break in the main contour of the reflector.

In Fig. 5 a luminaire entirely similar to that shown in Fig. 1 is shown except that a metal reflector is employed in which the depression of light from the skirt of the reflector is secured by a change in reflector contour. In Fig. 5 metal reflector 38 has an upper portion 39 similar in contour and function to the upper portion of reflector 5 in Fig. 1. The lower part 40 is so shaped

as to function similarly to that portion of reflector 5, Fig. 1 having transverse prisms 10 on its inner surface. At 41 the separating line between portion 39 and portion 40 there is a definite change in contour as shown.

I claim:

1. A luminaire comprising a light source, a symmetrical reflector and a bottom cover provided with concentric prisms enclosing the source, the axis of the reflector being at an angle with reference to the vertical axis of the light source but intersecting it, and the center of the system of concentric prisms being off-set from the reflector axis.

2. A luminaire comprising a light source, a reflector and a bottom cover provided with concentric prisms enclosing the source, the axis of the reflector being at an angle to the vertical axis of the light source, and the center of the system of concentric prisms being offset from both axes.

3. A luminaire comprising a light source, a reflector and a bottom cover provided with concentric prisms enclosing the source, the axis of the reflector being at an angle with reference to the vertical axis of the light source, and the center of the system of concentric prisms being offset from the reflector axis.

4. A luminaire comprising a light source, a reflector and a bottom cover enclosing the source, the reflector being adapted to reflect light rays intercepted by it to the cover at useful angles, the cover being provided with concentric prisms having a common center lying between the vertical axis through the source and the reflector axis, the corrugations being divided into a plurality of sections, the section cut by the reflector axis being adapted to give moderate concentration of direct light from the source and the section cut by the vertical axis being adapted to give a greater degree of concentration of light from the source.

5. A luminaire comprising a light source, a reflector and a bottom cover enclosing the source, the reflector having its axis at an angle with the vertical axis of the source and adapted to reflect light rays intercepted by it to the cover at useful angles, the cover being provided with concentric prisms having a common center intermediate between the reflector axis and the vertical axis through the source, the corrugations being divided into two sections, the section cut by the reflector axis being adapted to give moderate concentration of direct light from the source and the section cut by the vertical axis being adapted to give a greater degree of concentration of light from the source.

6. A luminaire comprising a light source, a reflector and a bottom cover, provided with concentric prisms enclosing the source, the upper portion of the reflector being adapted to reflect light rays across its axis to the outer concentric prism faces at useful angles for transmission and concentration and the lower portion of the reflector being provided with transverse prisms on its inner surface adapted to depress the reflected rays which they intercept and direct them to the inner faces of the concentric prisms at useful angles for transmission and concentration.

Signed at Newark, in the county of Licking, and State of Ohio, this 18th day of October, 1924.

WILLIAM A. DOREY.