US011713532B2

(12) **United States Patent**
Capelotti et al.

(10) **Patent No.: US 11,713,532 B2**
(45) **Date of Patent: Aug. 1, 2023**

(54) **METHOD OF DETERMINING VOLUME OF WATER TO ADD TO FIRST AND SECOND WASHING COMPARTMENTS OF A WASHING MACHINE AS A FUNCTION OF DETERMINED MOMENT OF INERTIA**

(71) Applicant: **WHIRLPOOL CORPORATION**, Benton Harbor, MI (US)

(72) Inventors: **Pedro H. Capelotti**, Rio Claro (BR); **Maurilio F. Catharino**, St. Joseph, MI (US); **Mauro R. Ushizima**, Rio Claro (BR)

(73) Assignee: **Whirlpool Corporation**, Benton Harbor, MI (US)

(*) Notice: Subject to any disclaimer, the term of this patent is extended or adjusted under 35 U.S.C. 154(b) by 0 days.

(21) Appl. No.: **17/836,739**

(22) Filed: **Jun. 9, 2022**

(65) **Prior Publication Data**

US 2022/0298711 A1 Sep. 22, 2022

Related U.S. Application Data

(62) Division of application No. 16/547,650, filed on Aug. 22, 2019, now Pat. No. 11,427,950.

(51) **Int. Cl.**
D06F 39/08 (2006.01)
D06F 23/04 (2006.01)
(Continued)

(52) **U.S. Cl.**
CPC ***D06F 39/087*** (2013.01); ***D06F 23/04*** (2013.01); ***D06F 34/18*** (2020.02); ***D06F 37/16*** (2013.01);
(Continued)

(58) **Field of Classification Search**
None
See application file for complete search history.

(56) **References Cited**

U.S. PATENT DOCUMENTS

3,481,162 A 12/1969 Ziegler
3,575,020 A 4/1971 Hubbard
(Continued)

FOREIGN PATENT DOCUMENTS

KR 900010000 Y1 10/1990
KR 20010059865 A 7/2001
(Continued)

Primary Examiner — Cristi J Tate-Sims
(74) *Attorney, Agent, or Firm* — Price Heneveld LLP

(57) **ABSTRACT**

A washing machine includes a first washing compartment to hold a first set of articles to be washed and a second washing compartment to holds a second set of articles to be washed, the second washing compartment having an inserted position and a removed position. A liquid flow valve is configured to connect to an external liquid source to selectively control flow of liquid from the external liquid source and into one or more of the first washing compartment and the second washing compartment. An electric motor is configured to rotate the first washing compartment, and the second washing compartment, when the second washing compartment is in the inserted position. A controller, in communication with the electric motor, determines a mass of the second set of articles and then determines, as a function of the determined mass, a volume of water to be added to the second washing compartment.

20 Claims, 9 Drawing Sheets

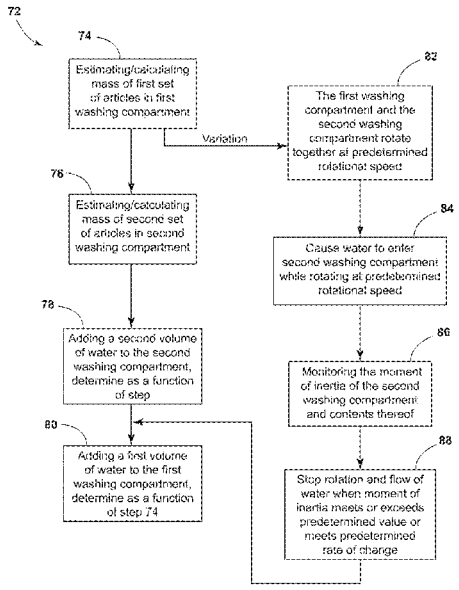

(51) **Int. Cl.**

D06F 37/16	(2006.01)
D06F 37/30	(2020.01)
D06F 34/18	(2020.01)
D06F 105/48	(2020.01)
D06F 105/02	(2020.01)
D06F 103/04	(2020.01)

(52) **U.S. Cl.**

CPC ***D06F 37/304*** (2013.01); ***D06F 39/088*** (2013.01); *D06F 2103/04* (2020.02); *D06F 2105/02* (2020.02); *D06F 2105/48* (2020.02)

(56) **References Cited**

U.S. PATENT DOCUMENTS

9,091,011	B2	7/2015	Janke et al.
9,540,756	B2	1/2017	Janke et al.
9,611,581	B2	4/2017	Seo et al.
9,863,078	B2	1/2018	Ramasco et al.
9,890,492	B2	2/2018	Cabral Melo et al.
2015/0047396	A1	2/2015	Beckert Polli et al.
2015/0184326	A1	7/2015	Seo et al.
2015/0337474	A1	11/2015	Bodine et al.
2016/0201243	A1	7/2016	Bergamo
2017/0089001	A1	3/2017	Obregon
2017/0167067	A1	6/2017	Lee et al.
2017/0350061	A1	12/2017	Ramasco et al.
2018/0119327	A1	5/2018	Kim et al.
2020/0063314	A1*	2/2020	Kwon D06F 37/16

FOREIGN PATENT DOCUMENTS

KR	20150025734	A	3/2015
KR	20150030806	A	3/2015
KR	20170122613	A	11/2017
KR	20180057838	A	5/2018

* cited by examiner

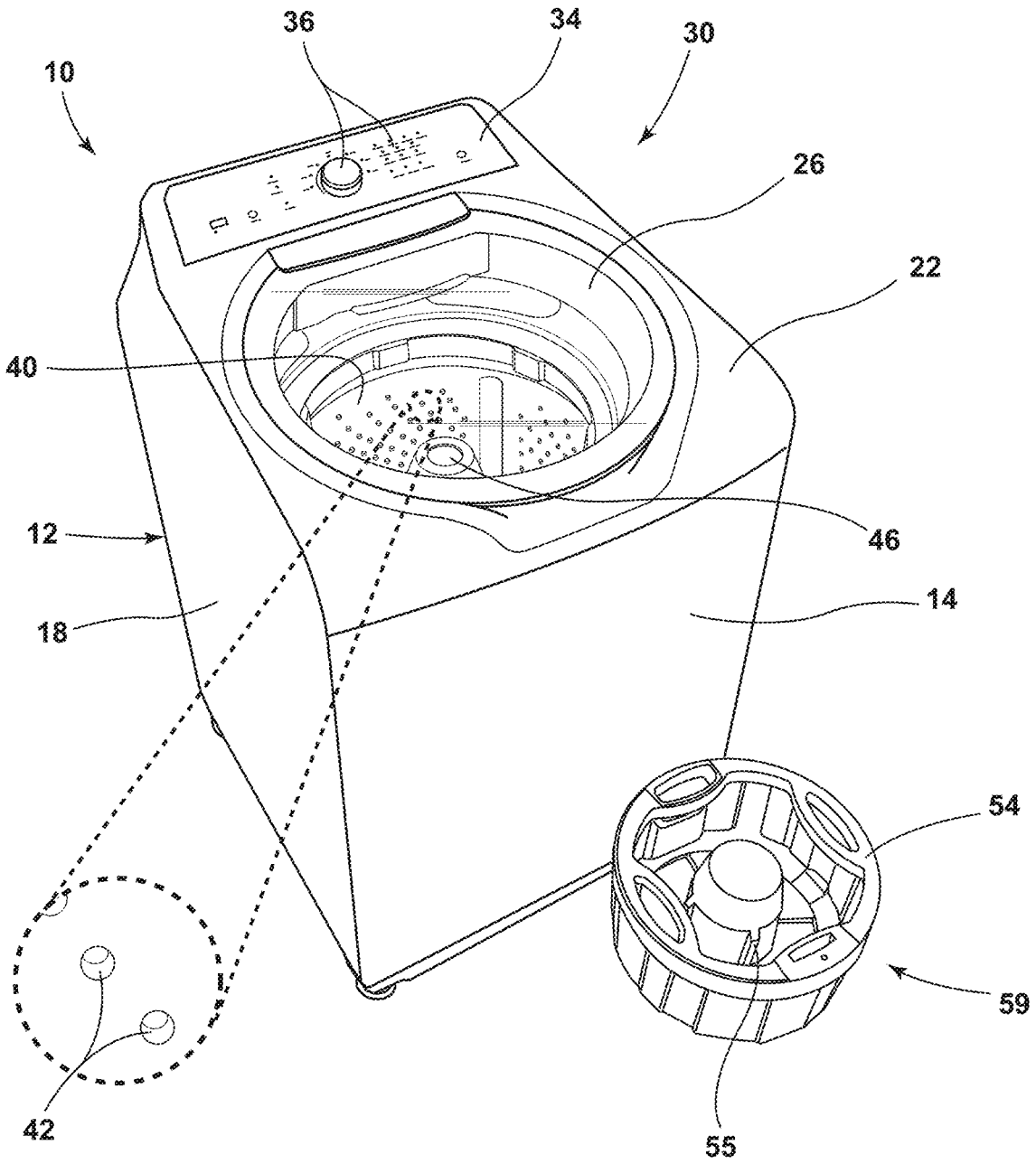

FIG. 1

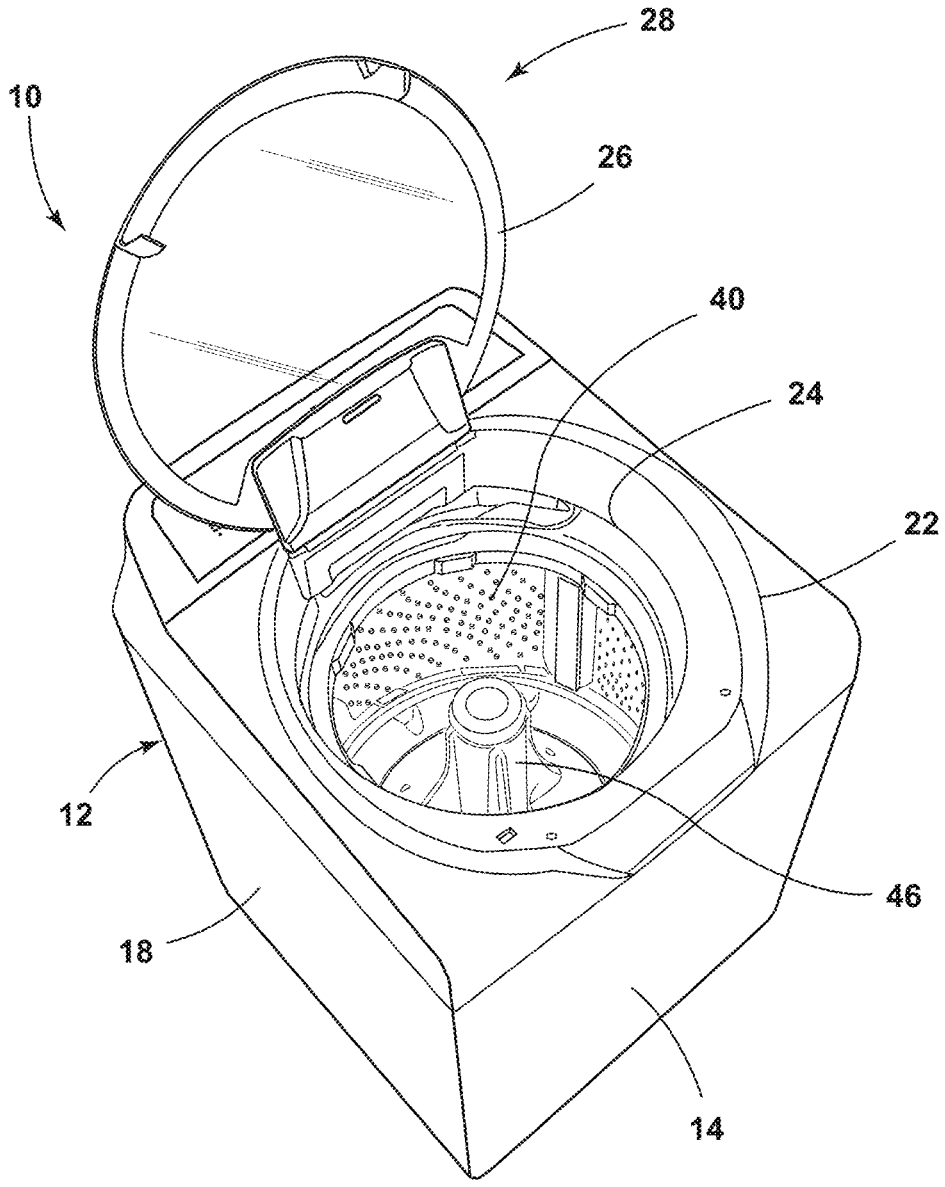

FIG. 2

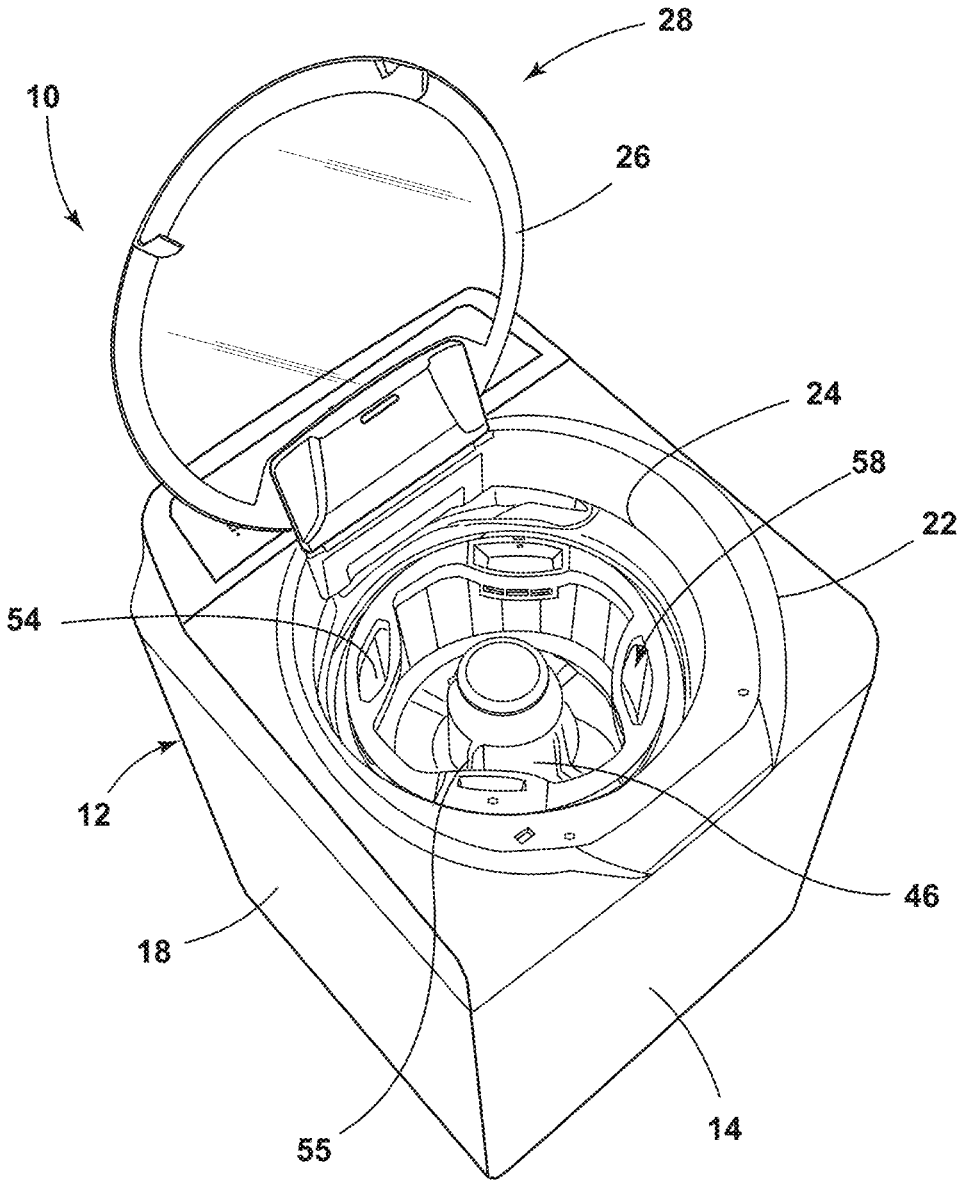

FIG. 3

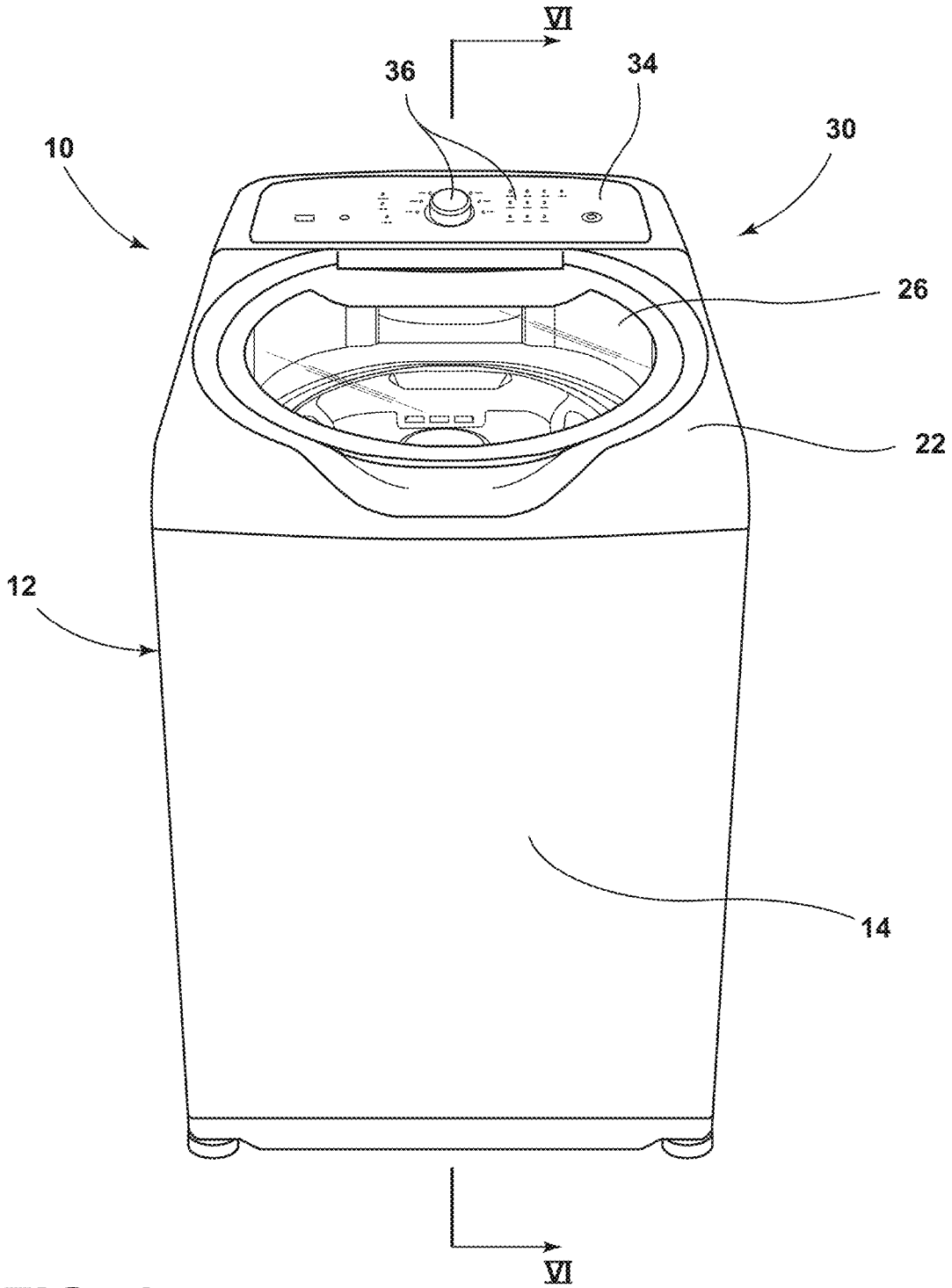

FIG. 4

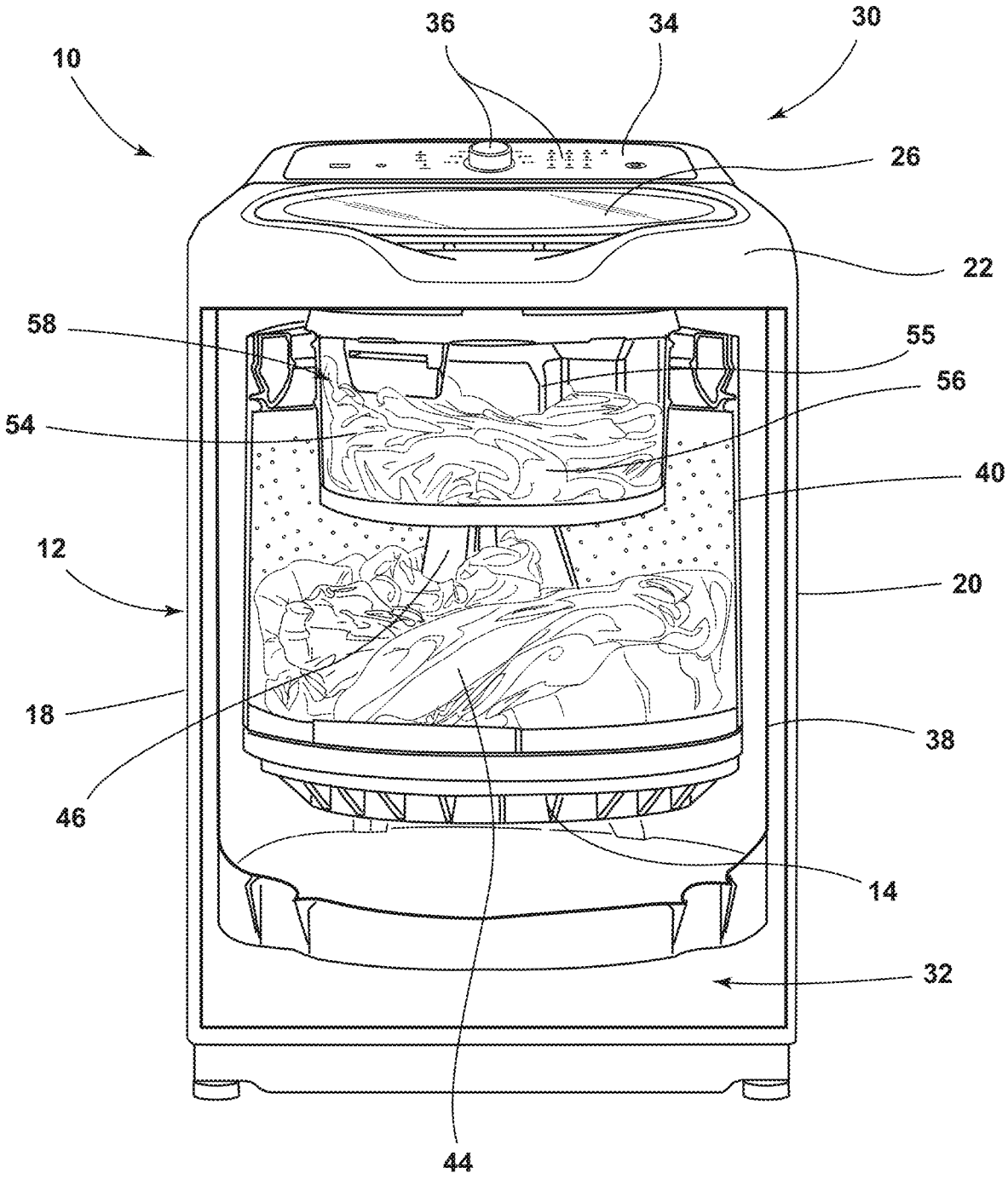

FIG. 5

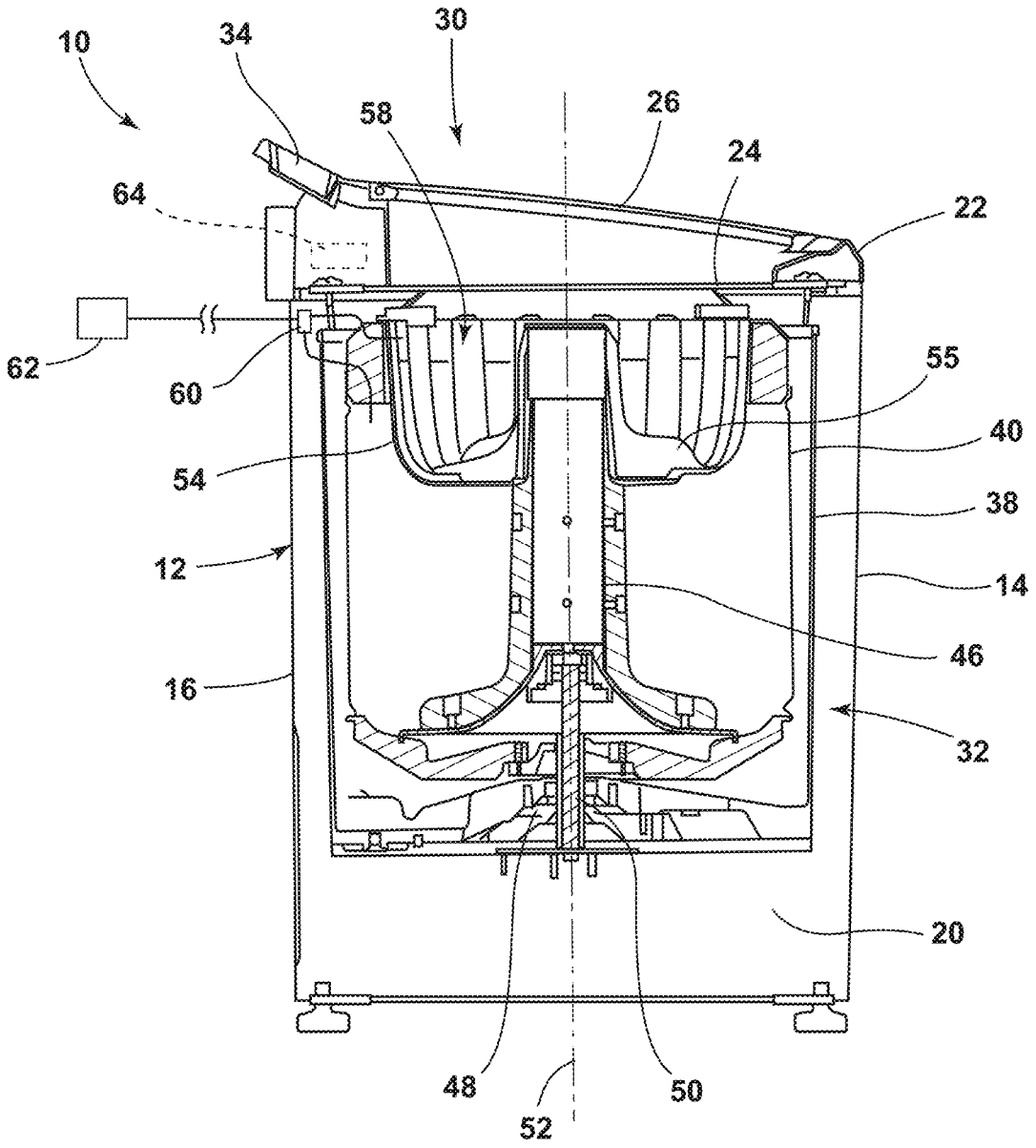

FIG. 6

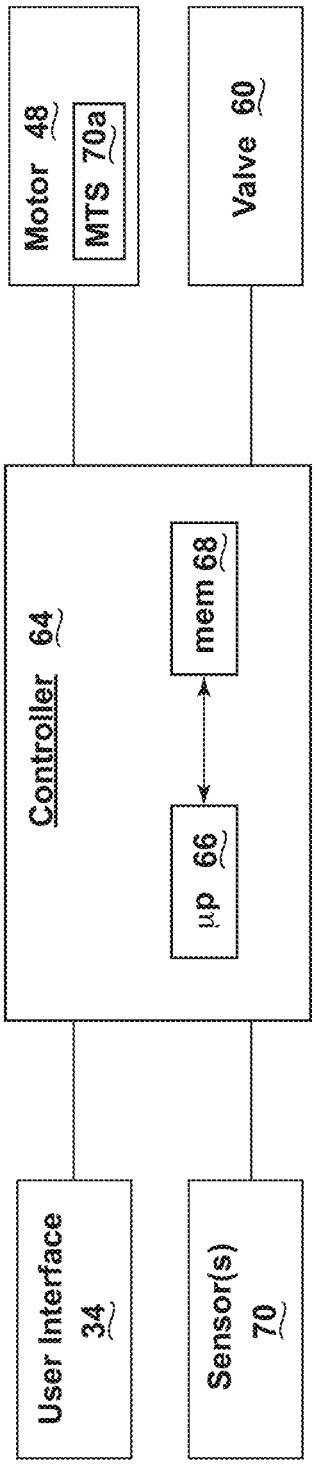
Motor 48
MTS 70a
Valve 60
Controller 64
mem 68
µp 66
User Interface 34
Sensor(s) 70

FIG. 7

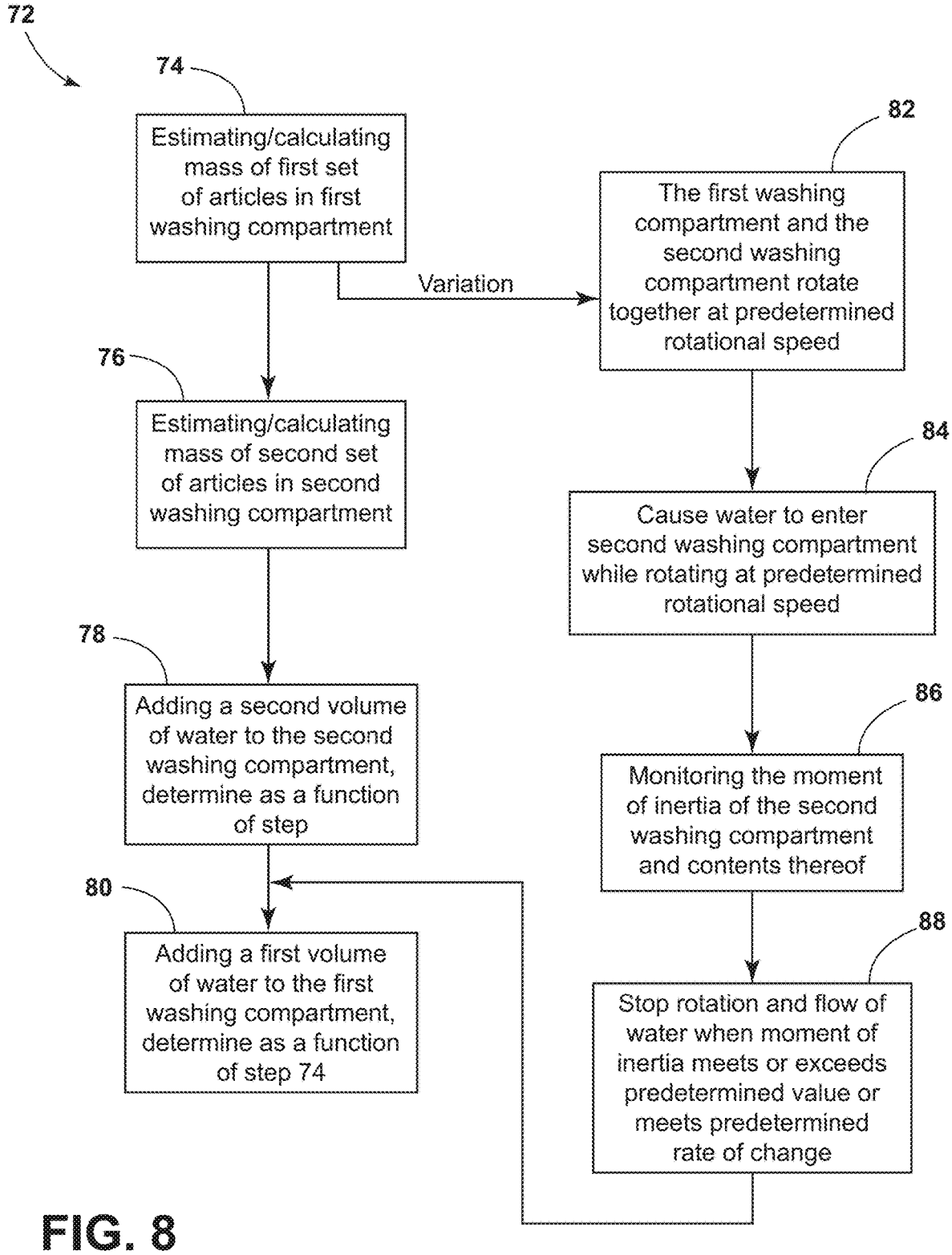
72
74
Estimating/calculating mass of first set of articles in first washing compartment
Variation
82
The first washing compartment and the second washing compartment rotate together at predetermined rotational speed
76
Estimating/calculating mass of second set of articles in second washing compartment
84
Cause water to enter second washing compartment while rotating at predetermined rotational speed
78
Adding a second volume of water to the second washing compartment, determine as a function of step
86
Monitoring the moment of inertia of the second washing compartment and contents thereof
80
Adding a first volume of water to the first washing compartment, determine as a function of step 74
88
Stop rotation and flow of water when moment of inertia meets or exceeds predetermined value or meets predetermined rate of change

FIG. 8

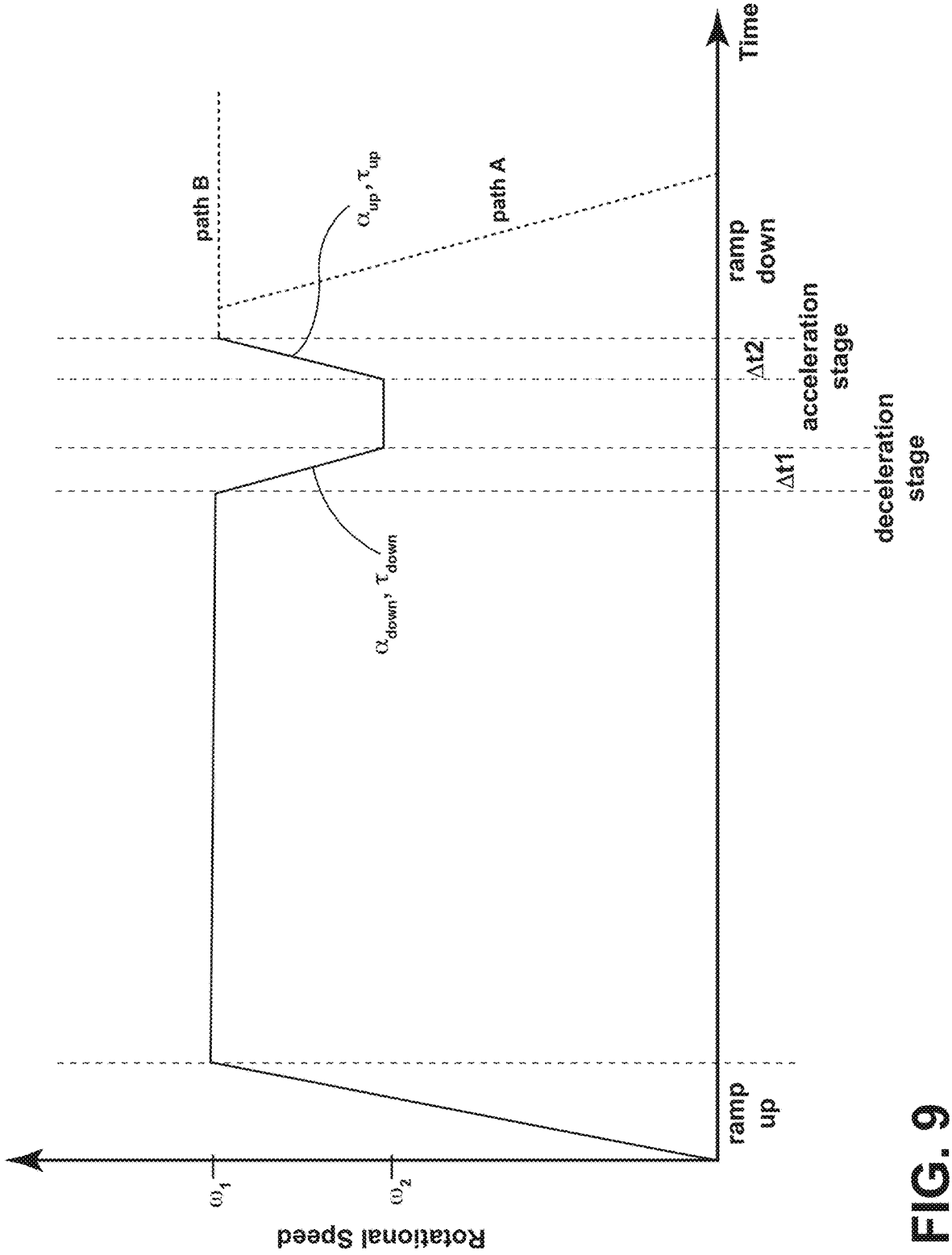
Rotational Speed
ω_1
ω_2
Time
ramp up
ramp down
path A
path B
α_{up}, τ_{up}
$\alpha_{down}, \tau_{down}$
$\Delta t1$
$\Delta t2$
deceleration stage
acceleration stage

FIG. 9

METHOD OF DETERMINING VOLUME OF WATER TO ADD TO FIRST AND SECOND WASHING COMPARTMENTS OF A WASHING MACHINE AS A FUNCTION OF DETERMINED MOMENT OF INERTIA

CROSS-REFERENCE TO RELATED APPLICATION

This application is a divisional application of U.S. patent application Ser. No. 16/547,650, which was filed on 22 Aug. 2019, now U.S. Pat. No. 11,427,950, entitled "METHOD OF DETERMINING VOLUME OF WATER TO ADD TO FIRST AND SECOND WASHING COMPARTMENTS OF A WASHING MACHINE AS A FUNCTION OF DETERMINED MOMENT OF INERTIA", the entire disclosure of which is hereby incorporated by reference herein.

BACKGROUND OF THE DISCLOSURE

Clothes washing machines wash clothing, fabric, and other items (hereinafter collectively referred to as "articles"). Some washing machines utilize a tub with a solitary washing compartment, which can be perforated, disposed inside the tub. The solitary washing compartment holds the articles to be washed, and the tub holds a liquid such as water to assist in the washing operation. Some washing machines incorporate a first washing compartment, like the solitary washing compartment, as well as a second, removable, washing compartment. The second washing compartment allows for washing of a second set of articles simultaneously with the washing of a first set of articles in the first washing compartment.

However, there is a problem in that the washing machines that utilize the second, removable, washing compartment do not automatically determine an optimal amount of water to utilize in the second washing compartment. This failure can result in the additional problem of the washing machine adding a volume of liquid to the second washing compartment that overflows, along with any laundering chemicals in the second washing compartment, from the second washing compartment into the first washing compartment. That overflowing potentially transfers undesirable substances, such as bleach, dye, and cleaning agents, from the first washing compartment to the second washing compartment.

SUMMARY OF THE DISCLOSURE

The present disclosure solves those problems with a washing machine that estimates or calculates the mass of the set of articles in the second, removable, washing compartment, then determines a volume of water (insufficient to overflow into the first washing compartment) to add to the second washing compartment as a function of the estimated or calculated mass, and then adds that determined volume of water to the second washing compartment.

According to one aspect of the present disclosure, a washing machine includes a tub. A first washing compartment is disposed within the tub to hold a first set of articles to be washed, the first set of articles having a mass. A second washing compartment holds a second set of articles to be washed, the second set of articles having a mass, the second washing compartment having an inserted position and a removed position. A liquid flow valve is configured to connect to an external liquid source to selectively control flow of liquid from the external liquid source and into either the first washing compartment, the second washing compartment, or both the first washing compartment and the second washing compartment. An electric motor is operably coupled to and configured to cause the first washing compartment to rotate, and operably coupled to and configured to cause the second washing compartment to rotate when the second washing compartment is in the inserted position but not in the removed position. A controller is in communication with the electric motor that estimates or calculates the mass of the second set of articles held by the second washing compartment and then calculates, as a function of the estimated or calculated mass of the second set of articles, a volume of water to be added to the second washing compartment.

According to another aspect of the present disclosure, a washing machine includes a tub. A first washing compartment is disposed within the tub to hold a first set of articles to be washed, the first set of articles having a mass. A second washing compartment holds a second set of articles to be washed, the second set of articles having a mass, the second washing compartment having an inserted position and a removed position. A liquid flow valve is configured to connect to an external liquid source to selectively control flow of liquid from the external liquid source and into either the first washing compartment, the second washing compartment, or both the first washing compartment and the second washing compartment. An electric motor is operably coupled to and configured to cause the first washing compartment to rotate, and operably coupled to and configured to cause both the first washing compartment and the second washing compartment to rotate when the second washing compartment is in the inserted position but not in the removed position. A controller is in communication with the electric motor and is configured to: (a) to cause the electric motor to rotate together the first washing compartment and the second washing compartment at a predetermined rotational speed when the second washing compartment is in the inserted position and contains the second set of articles; (b) to cause liquid to flow from the external liquid source and into the second washing compartment while the second washing compartment is rotating at the predetermined rotational speed; (c) to cause the electric motor to maintain rotating the first washing compartment and the second washing compartment at the predetermined rotational speed, while monitoring the moment of inertia of the second washing compartment together with the second set of articles and the liquid in the second washing compartment; and (d) as the moment of inertia meets or exceeds a predetermined value, or as the moment of inertia meets or exceeds a predetermined rate of change, to cause the electric motor to stop rotating the first washing compartment and the second washing compartment and to stop liquid from flowing from a liquid supply system into the second washing compartment.

According to yet another aspect of the present disclosure, a method of adding a volume of water to a removable washing compartment of a washing machine includes, after a first set of articles is loaded into a first washing compartment of a washing machine and while a second washing compartment of the washing machine is in a removed position, estimating or calculating a mass of the first set of articles in the first washing compartment; after the second washing compartment is placed into an inserted position and a second set of articles is loaded into the second washing compartment, estimating or calculating a mass of the second set of articles in the second washing compartment; adding a second volume of water to the second washing compartment, without causing water added to the second washing

compartment to overflow from the second washing compartment into the first washing compartment, the second volume of water determined as a function of the estimated or calculated mass of the second set of articles; and adding a first volume of water to the first washing compartment, the first volume of water determined as a function of the estimated or calculated mass of the first set of articles.

These and other features, advantages, and objects of the present disclosure will be further understood and appreciated by those skilled in the art by reference to the following specification, claims, and appended drawings.

BRIEF DESCRIPTION OF THE DRAWINGS

In the drawings:

FIG. **1** is a perspective view of a washing machine of the present disclosure, illustrating a first washing compartment and a second washing compartment in a removed position;

FIG. **2** is a perspective view of the washing machine of FIG. **1**, illustrating a lid of the washing machine in an opened position providing access through an opening into the first washing compartment;

FIG. **3** is a perspective view of the washing machine of FIG. **1**, illustrating the lid in the washing machine in the opened position and the second washing compartment in the inserted position above and partially surrounded by the first washing compartment;

FIG. **4** is a front perspective view of the washing machine of FIG. **1**, illustrating the lid in a closed position and the second washing compartment in the inserted position below the lid;

FIG. **5** is a front perspective view of the washing machine of FIG. **1**, illustrating an interior of the washing machine as if a front wall portion of a cabinet of the washing machine were absent, the first washing compartment holding a first set of articles, and the second washing compartment holding a second set of articles, allowing both the first set of articles and the second set of articles to be simultaneously washed;

FIG. **6** is a cross-sectional view of the washing machine of FIG. **1** taken through line VI-VI of FIG. **4**, illustrating a motor operably coupled to a shaft, which is operably coupled to the first washing compartment, an agitator, and the second washing compartment (while in the inserted position) through the agitator;

FIG. **7** is a schematic diagram for a controller of the washing machine of FIG. **1**, illustrating the controller controlling the motor and a liquid (water) control valve to supply liquid selectively to the first washing compartment and the second washing compartment;

FIG. **8** is a flow diagram for a method of adding a volume of liquid (water) to the second, removable, washing compartment of the washing machine of FIG. **1**, which is determined as a function of the mass of the second set of articles, which is determined by the controller via estimation/calculation of the moment of inertia of the second washing compartment with the second set of articles; and

FIG. **9** is a graph of rotational speed of either the first washing compartment, or both the first washing compartment and the second washing compartment, as a function of time, illustrating a deceleration stage and an acceleration stage, from which the torque imparted by the electric motor can be determined in order to determine subsequently the mass of the first set of articles or the second set of articles, as the case may be.

The components in the figures are not necessarily to scale, emphasis instead being placed upon illustrating the principles described herein.

DETAILED DESCRIPTION

The present illustrated embodiments reside primarily in combinations of method steps and apparatus components related to a washing machine. Accordingly, the apparatus components and method steps have been represented, where appropriate, by conventional symbols in the drawings, showing only those specific details that are pertinent to understanding the embodiments of the present disclosure so as not to obscure the disclosure with details that will be readily apparent to those of ordinary skill in the art having the benefit of the description herein. Further, like numerals in the description and drawings represent like elements.

For purposes of description herein, the terms "rear," "front," "side," "top," "beneath," and derivatives thereof shall relate to the disclosure as oriented in FIG. **1**. However, it is to be understood that the disclosure may assume various alternative orientations, except where expressly specified to the contrary. It is also to be understood that the specific devices and processes illustrated in the attached drawings, and described in the following specification are simply exemplary embodiments of the inventive concepts defined in the appended claims. Hence, specific dimensions and other physical characteristics relating to the embodiments disclosed herein are not to be considered as limiting, unless the claims expressly state otherwise.

The terms "including," "comprises," "comprising," or any other variation thereof, are intended to cover a non-exclusive inclusion, such that a process, method, article, or apparatus that comprises a list of elements does not include only those elements but may include other elements not expressly listed or inherent to such process, method, article, or apparatus. An element proceeded by "comprises a . . . " does not, without more constraints, preclude the existence of additional identical elements in the process, method, article, or apparatus that comprises the element.

Referring to FIGS. **1-6**, a washing machine **10** of the present disclosure is illustrated. The washing machine **10** illustrated is of the top loading variety, but could be of the front loading variety as well. The washing machine **10** includes a cabinet **12**. The cabinet **12** includes a front wall portion **14**, a rear wall portion **16**, and side wall portions **18**, **20** that extend from the front wall portion **14** to the rear wall portion **16**. The cabinet **12** further includes a top portion **22** with an opening **24** and a lid **26** disposed at the top portion **22** that can move to, from, and between an opened position **28** and a closed position **30** to selectively allow or deny access to the opening **24**. The front wall portion **14**, the rear wall portion **16**, and the side wall portions **18**, **20** can each be formed as separate pieces, or may be formed as one or more continuous pieces. For example, the rear wall portion **16** can be separate, while the front wall portion **14** and the side wall portions **18**, **20** can be continuous with each other. The front wall portion **14**, the rear wall portion **16**, and the side wall portions **18**, **20** can be mounted to a frame (not shown). The cabinet **12** defines an interior **32** enclosing components typically found in a conventional washing machine **10**, such as motors, pumps, fluid lines, controls, sensors, transducers, and the like. A user interface **34** can include multiple controls **36** (such as knobs and switches) and displays, and for communicating with the user, such as to receive input and provide output.

The washing machine **10** further includes a tub **38** and a first washing compartment **40** disposed within the tub **38**. In the illustrated embodiment, the first washing compartment **40** is perforated with perforations **42** while the tub **38** is not. The first washing compartment **40** can hold a first set of articles **44** to be washed. The first set of articles **44** has a mass, which will vary from load-to-load as a function of the composition of the first set of articles **44**.

A first agitator **46** is located in the first washing compartment **40**. During operation of the washing machine **10**, the first agitator **46** imparts mechanical agitation to the first set of articles **44** placed in the first washing compartment **40** and extends upwardly from the bottom of the first washing compartment **40**. The first washing compartment **40** and the first agitator **46** are driven by an electric motor **48** via a shaft **50**. Stated another way, the electric motor **48** is operably coupled to and configured to cause the first washing compartment **40** and the first agitator **46** to move. More specifically, the electric motor **48** includes the shaft **50**, and the shaft **50** rotates about an axis **52**. The electric motor **48** can cause the first agitator **46** to move independently of the first washing compartment **40**, such that the first agitator **46** can mechanically agitate as mentioned above while the first washing compartment **40** remains stationary. In addition, the electric motor **48** can cause the first washing compartment **40** and the first agitator **46** to rotate simultaneously about the axis **52** as the electric motor **48** causes the shaft **50** to rotate about the axis **52**, such as during a spin cycle as known in the art. The electric motor **48** can be a three-phase induction motor, a brushless permanent magnet (BPM), or a single-phase induction motor (i.e., a permanent split capacitor with motor sensing capabilities).

The washing machine **10** further includes a second washing compartment **54**. The second washing compartment **54** can hold a second set of articles **56** to be washed. The second set of articles **56** has a mass, which again varies from load-to-load depending on the composition of the second set of articles **56**. The second washing compartment **54** releasably couples to the first washing compartment **40**, such that when the electric motor **48** drives the first washing compartment **40**, the electric motor **48** drives the second washing compartment **54** as well. A second agitator **55** releasably couples to the first agitator **46**, such that when the electric motor **48** drives the first agitator **46**, the electric motor **48** drives the second agitator **55** as well. The second washing compartment **54** is removable in that the second washing compartment **54** is movable to, from, and between an inserted position **58** where the second washing compartment **54** is coupled to the first washing compartment **40** and a removed position **59** where the second washing compartment **54** is not coupled to the first washing compartment **40** and not beneath the lid **26** when the lid **26** is in the closed position **30**. The first washing compartment **40** can be utilized to wash the first set of articles **44** independently while the second washing compartment **54** is in the removed position **59**. When the second washing compartment **54** is in the inserted position **58**, the electric motor **48** can actuate the second washing compartment **54** through the first washing compartment **40** and cause the second washing compartment **54** to rotate about the axis **52**. Thus, when the second washing compartment **54** is in the inserted position **58**, as the electric motor **48** causes the shaft **50** to rotate about the axis **52**, both the first washing compartment **40** and the second washing compartment **54** can also rotate simultaneously about the axis **52**. When the second washing compartment **54** is in the inserted position **58**, the electric motor **48** can actuate the second agitator **55** through the first agitator **46** and cause the second agitator **55** to rotate about the axis **52**. Thus, when the second washing compartment **54** is in the inserted position **58**, as the electric motor **48** causes the shaft **50** to rotate about the axis **52**, both the first agitator **46** and the second agitator **55** can rotate simultaneously about the axis **52**. However, when the second washing compartment **54** is in the removed position **59**, the electric motor **48** cannot cause either the second washing compartment **54** or the second agitator **55** to rotate.

The washing machine **10** further includes a liquid flow valve **60**. The liquid flow valve **60** controls the inlet of liquid (such as water) into the washing machine **10** from an external liquid source **62**. The liquid flow valve **60** can be connected to the external liquid source **62** through tubing as known in the art. The liquid flow valve **60** selectively controls the flow of liquid from the external liquid source **62** into either the first washing compartment **40**, the second washing compartment **54**, or both the first washing compartment **40** and the second washing compartment **54**. For example, when the second washing compartment **54** is in the removed position **59** and only the first washing compartment **40** is being utilized to wash the first set of articles **44**, then the liquid flow valve **60** can control the flow of liquid from the external liquid source **62** to flow into the first washing compartment **40**. When the second washing compartment **54** is in the inserted position **58** to wash the second set of articles **56**, in addition to the first set of articles **44** in the first washing compartment **40**, the liquid flow valve **60** can cause liquid to flow from the external liquid source **62** into only the second washing compartment **54** at a certain point in time, only into the first washing compartment **40** at a different point in time, or into both the first washing compartment **40** and the second washing compartment **54** simultaneously.

The washing machine **10** further includes a controller **64**. The controller **64** can include a microprocessor **66** and a memory **68**. The microprocessor **66** can execute programs stored in the memory **68** to effectuate the method herein described below. The memory **68** can also be used to store information, such as a database, table, or calculated data pertinent to the method below, and to store data received from one or more components of the washing machine **10** that may be communicably coupled with the controller **64**. The controller **64** is in communication with, and controls the operation of, the electric motor **48**, the liquid flow valve **60**, and the washing machine **10** generally. The controller **64** can receive input from, and provide output to, the user of the washing machine **10** via the user interface **34**. The controller **64** performs further functions as described below. The controller **64** may also be coupled with one or more sensors **70** provided in one or more of the systems of the washing machine **10** to receive input from the sensors **70**, an example of which includes a torque measurement from the motor controller or a motor torque sensor **70***a*.

The motor torque sensor **70***a* can be a measurement device that is part of the electric motor **48** separate from the controller **64** or can be part of the controller **64**, separate from the electric motor **48**, that collects measurements from the electric motor **48** and computes torque. Contemporary electric motors **48** often incorporate a dedicated controller that can output data relative to the electric motor **48** to the controller **64**, such as rotational speed, current utilized, voltage applied, direction of rotation, and torque imparted, etc. If the dedicated controller does not specifically output data concerning torque imparted, but outputs other types of data related to current utilized and voltage applied, which are indicative of torque imparted, then the controller **64** may

use that data to determine the torque applied by the electric motor **48** using a program that may be stored in the memory **68** of the controller **64**.

Referring now to FIG. **8**, a method **72** of adding a volume of water to the second washing compartment **54** (a removable washing compartment) of the washing machine **10** includes a step **74** of estimating or calculating the mass of the first set of articles **44** in the first washing compartment **40**. Before step **74**, the user will have loaded the first set of articles **44** into the first washing compartment **40**, while the second washing compartment **54** is in the removed position **59**. In embodiments, the controller **64** estimates or calculates the mass of the first set of articles **44** when the second washing compartment **54** is in the removed position **59** by estimating or calculating the moment of inertia of the first set of articles **44**.

In embodiments, the controller **64** estimates or calculates the moment of inertia of the first set of articles **44** (and, from the moment of inertia, the mass of the first set of articles **44**), at least in part by causing the first washing compartment **40** with the first set of articles **44** to rotate according to a rotational speed as a function of time profile as set forth in FIG. **9**. First, the controller **64** causes the electric motor **48** to rotate the first washing compartment **40** at a first substantially constant rotational speed (ω_1), after a ramp up period where the first washing compartment **40** is accelerated from a rest state to the first substantially constant rotational speed (ω_1). Second, during a deceleration stage, the controller **64** controls the electric motor **48** to cause the rotational speed of the first washing compartment **40** (containing the first set of articles **44**) to decrease from the first substantially constant rotational speed (ω_1) to a second substantially constant rotational speed (ω_2) over a first period of time (Δ_{t1}) for an average deceleration (α_{down}) of

$$\frac{(\omega_1 - \omega_2)}{\Delta_{t1}};$$

Third, during an acceleration phase, the controller **64** controls the electric motor **48** to cause the rotational speed of the first washing compartment **40** (containing the first set of articles **44**) to increase from the second substantially constant rotational speed (ω_2) to the first substantially constant rotational speed (ω_1) over a second period of time (Δ_{t2}) for an average acceleration (α_{up}) of

$$\frac{(\omega_2 - \omega_1)}{\Delta_{t2}};$$

The controller **64** then controls the electric motor **48** to decelerate the rotation of the first washing compartment **40** back to rest during a ramp down period (see path A, FIG. **9**). The controller **64** maintains the first substantially constant rotational speed (ω_1) and the second substantially constant rotational speed (ω_2) at least long enough for the electric motor **48** to stabilize. The first washing compartment **40** with the first set of articles **44** is accelerated and decelerated in this manner while the first set of articles **44** are in their original "dry" state, that is, the washing machine **10** has not added a volume of water to the first washing compartment **40** yet. The first substantially constant rotational speed (ω_1) and the second substantially constant rotational speed (ω_2) can be any suitable speed and may be tuned to provide the best signal-to-noise ratio for data sensing, which depends on the particular configuration of the washing machine **10**. The average acceleration/deceleration (α_{up} and α_{down}) can be any suitable acceleration or deceleration, and can have the same or different absolute values. In embodiments, the average acceleration/deceleration (α_{up} and α_{down}) have the same absolute value.

In embodiments, the controller **64** estimates or calculates the moment of inertia of the first set of articles **44** (and, from the moment of inertia, the mass of the first set of articles **44**), at least in part by sensing, estimating, or calculating the torque (τ_{down}) that the electric motor **48** outputs while causing the rotational speed of the first washing compartment **40** with the first set of articles **44** to decrease from the first substantially constant rotational speed (ω_1) to the second substantially constant rotational speed (ω_2) over the first period of time (Δ_{t1}). Similarly, In embodiments, the controller **64** estimates or calculates the moment of inertia of the first set of articles **44** (and, from the moment of inertia, the mass of the first set of articles **44**), at least in part by sensing, estimating, or calculating the torque (τ_{up}) that the electric motor **48** outputs while causing the rotational speed of the first washing compartment **40** with the first set of articles **44** to increase from the second substantially constant rotational speed (ω_2) to the first substantially constant rotational speed (ω_1) over the second period of time (Δ_{t2}). In other words, the controller **64** senses, estimates, or calculates the torque (τ_{down}) that the electric motor **48** outputs during the deceleration stage and the torque (τ_{up}) that the electric motor **48** outputs during the acceleration phase. The torques (τ_{down} and τ_{up}) that the controller **64** sense, estimate, or calculate can be the average torques during the deceleration stage and the acceleration stage, respectively.

For example, the motor torque sensor **70***a* (e.g., the controller **64** that is part of the electric motor **48**), or other suitable sensor, may sense and output the relevant data to the controller **64** to allow the controller **64** to obtain, estimate, or calculate the torque data (τ_{down} and τ_{up}) and acceleration data (α_{down} and α_{up}) of the first washing compartment **40** during the deceleration stage and the acceleration phase for use in determining the moment of inertia of the first washing compartment **40** (with the first set of articles **44**). While the electric motor **48** decelerates and accelerates the first washing compartment **40** (with the first set of articles **44**) according to commands from the controller **64**, the actual deceleration and acceleration realized by the first washing compartment **40** will likely differ from the commanded acceleration and deceleration. As mentioned above, contemporary electric motors **48** often include their own controller that outputs data for such information. The electric motor **48**, for example, can provide torque data, which the electric motor **48** calculates as a function of electrical current and bus voltage. The electric motor **48** then outputs that data to the controller **64**. For some electric motors **48**, this data is not available directly from the electric motor **48**. When the data is not available, other values indicative of the torque may be used. For example, the torque may be proportional to a motor characteristic, such as the current of the electric motor **48**, for example, which may be used instead and as part of an estimation of the moment of inertia.

In embodiments, the controller **64** estimates or calculates the moment of inertia of the first set of articles **44** (and, from the moment of inertia, the mass of the first set of articles **44**), at least in part by estimating or calculating the moment of inertia of the first washing compartment **40** with the first set of articles **44** via an equation that divides (τ_{up}–τ_{down}) by (α_{up}–α_{down}). An example of such an equation is derived below. Generally, the torque that the electric motor **48** must

output and impart to the first washing compartment **40** to rotate the first washing compartment **40** (with the first set of articles **44**) can be represented by equation (1) below:

$$\tau=(J_{fwc+fsa}*\alpha)+(B*\omega)+C \quad (1)$$

where τ is torque, $J_{fwc+fsa}$ is inertia of the combined first washing compartment **40** ("fwc") and the first set of articles **44** ("fsa"), α is acceleration, B is a viscous damping (friction) coefficient unique to the washing machine **10**, ω is the rotational speed of the first washing compartment **40**, and C is the coulomb friction unique to the electric motor **48** and the washing machine **10** generally. It follows that the torque during the deceleration phase (τ_{down}) and the acceleration phase (τ_{up}) are, respectively:

$$\tau_{down}=(J_{fwc+fsa}*\alpha_{down})+(B*\omega_{down})+C \quad (2)$$

$$\tau_{up}=(J_{fwc+fsa}*\alpha_{up})+(B*\omega_{up})+C \quad (3)$$

The torque during the acceleration phase (τ_{up}) is greater than the torque during the deceleration phase (τ_{down}), and the difference between the torques is represented in equation (4) below:

$$\tau_{up}-\tau_{down}=((J_{fwc+fsa}*\alpha_{up})+(B*\omega_{up})+C)-((J_{fwc+fsa}*\alpha_{down})+(B*\omega_{down})+C) \quad (4)$$

The coulomb friction C is the same for both the deceleration phase and the acceleration phase and thus cancel out. If the ω_{down} and the ω_{up} are considered as average rotational speeds of the first washing compartment **40** during the deceleration phase and the acceleration phase, respectively, and are equal, then the $(B*\omega_{down})+C$ and the $(B*\omega_{up})+C$ portions of equation (4) are equal and cancel out. With the friction related aspects canceling out, the result is equation (5) below:

$$\tau_{up}-\tau_{down}=J_{fwc+fsa}*(\alpha_{up}-\alpha_{down}) \quad (5)$$

Note that in instances where the electric motor **48** does not output torque data directly to the controller **64**, the controller **64** can derive the torque during the acceleration phase (τ_{up}) and the torque during the deceleration phase (τ_{down}) from sensor-less torque estimation techniques using motor current readings, or the average current of electricity that the electric motor **48** utilizes during the acceleration phase (I_{up}) and the average current of electricity that the electric motor **48** utilizes during the deceleration phase (I_{down}), respectively, because the torque that the electric motor **48** is delivering is proportional to the motor current. In any event, solving for the moment of inertia $J_{fwc+fsa}$ of the first washing compartment **40** (with the first set of articles **44**) thus provides equation (6) below:

$$J_{fwc+fsa}=\frac{(\tau_{up}-\tau_{down})}{(\alpha_{up}-\alpha_{down})} \quad (6)$$

The controller **64** can save this value in the memory **68** for subsequent use. The moment of inertia of the first washing compartment **40** (J_{fwc}) is known, constant, and stored in memory **68**. Thus, the moment of inertia of the first set of articles **44** (J_{fsa}) can be determined with equation (7) below:

$$J_{fsa}=J_{fwc+fsa}-J_{fwc} \quad (7)$$

In other embodiments, instead of canceling out the viscous damping B and the coulomb friction C, an algorithm such as a recursive least squares algorithm, can estimate the values. The mass of the first set of articles **44** ($mass_{fsa}$) can be approximated from the inertia J_{fsa} with equation (8) below:

$$mass_{fsa}=\frac{J_{fsa}}{r^2} \quad (8)$$

where r is an assumed radius of the first set of articles **56** inside the first washing compartment **40** relative to the axis **52**. In some circumstances, the mass of the first set of articles **44** as estimated or calculated using the model detailed above will differ from the actual mass of the first set of articles **44**, because of modeling imprecision and "noise". Thus, the relationship between the mass of the first set of articles **44** estimated/calculated from the equation (8) and the model above and the true mass of the first set of articles **44** can be experimentally correlated, such that the model includes the controller **64** executing equation (9) below:

$$mass_{fsa\_actual}=f(J_{fsa})+N \quad (9)$$

where $mass_{fsa\_actual}$ is the true mass of the first set of articles **44**, or at least a closer approximation thereof and N are the experimentally deduced noise factors, which, in embodiments, varies as a function of the model of the washing machine **10**. The noise factors (N) can be predicted using statistical modeling where it is experimentally or empirically tuned for a specific class or platform of products. The controller **64** can then cause the determined mass of the first set of articles **44** ($mass_{fsa\_actual}$) to be stored in the memory **68**.

The method **72** further includes, at step **76**, estimating or calculating a mass of the second set of articles **56** in (i.e., held by) the second washing compartment **54**. This step **76** will occur after the second washing compartment **54** is placed into the inserted position **58** and the second set of articles **56** is loaded into the second washing compartment **54**. The controller **64** can prompt the user at the user interface **34** to place the second washing compartment **54** in the inserted position **58**, and to load the second set of articles **56** into the second washing compartment **54**. In embodiments, this step **76** occurs after step **74** but need not. The controller **64** can confirm that the lid **26** is in the closed position **30** before estimating or calculating the mass of the second set of articles **56** in the second washing compartment **54**.

At this point, in this embodiment, the washing machine **10** includes the first washing compartment **40** (holding the first set of articles **44**) and the second washing compartment **54** (holding the second set of articles **56**) in the inserted position **58**. At step **74**, the controller **64** already estimated or calculated the mass of the first set of articles **44** when the second washing compartment **54** was in the removed position **59** and stored that value in the memory **68**. Thus, in embodiments, to estimate or calculate the mass of the second set of articles **56**, the controller **64**: (i) estimates or calculates the collective mass of the first set of articles **44** and the second set of articles **56** when the second washing compartment **54** is in the inserted position **58**; and then (ii) subtracts the estimated or calculated mass of the first set of articles **44** stored in the memory **68** from the estimated or calculated collective mass of the first set of articles **44** and the second set of articles **56**.

In embodiments, to estimate or calculate the collective mass of the first set of articles **44** and the second set of articles **56** when the second washing compartment **54** is in the inserted position **58**, the controller **64** again performs the mathematics model detailed above to determine the moment of inertia of the first set of articles **44** and the second set of articles **56** combined. In embodiments, the controller **64** estimates or calculates the moment of inertia of the first set

of articles **44** and the second set of articles **56** combined (and, from the moment of inertia, the mass of the first set of articles **44** and the mass of the second set of articles **56** combined), at least in part by causing the first washing compartment **40** (holding the first set of articles **44**) and the second washing compartment **54** (holding the second set of articles **56**) to rotate according to a rotational speed as a function of time profile as set forth in FIG. **9**. First, the controller **64** causes the electric motor **48** to rotate the first washing compartment **40** and the second washing compartment **54** (holding the first set of articles **44** and the second set of articles **56**, respectively) at a first substantially constant rotational speed (ω_1), after a ramp up period where the first washing compartment **40** and the second washing compartment **54** are accelerated from a rest state to the first substantially constant rotational speed (ω_1). Second, during a deceleration stage, the controller **64** controls the electric motor **48** to cause the rotational speed of the first washing compartment **40** (containing the first set of articles **44**) and the second washing compartment **54** (containing the second set of articles **56**) to decrease from the first substantially constant rotational speed (ω_1) to a second substantially constant rotational speed (ω_2) over a first period of time (Δ_{t1}) for an average deceleration (α_{down}) of $(\omega_1-\omega_2)/\Delta_{t1}$. Third, during an acceleration phase, the controller **64** controls the electric motor **48** to cause the rotational speed of the first washing compartment **40** (containing the first set of articles **44**) and the second washing compartment **54** (containing the second set of articles **56**) to increase to the first substantially constant rotational speed (ω_1) over a second period of time (Δ_{t2}) for an average acceleration (α_{up}) of $(\omega_2-\omega_1)/\Delta_{t2}$. In embodiments, the controller **48** then controls the electric motor **48** to maintain the first substantially constant rotational speed (ω_1) (see path B, FIG. **9**) until the controller **48** initiate a subsequent sensing iteration or some other step of the washing operation.

In embodiments, the controller **64** estimates or calculates the collective moment of inertia of the first set of articles **44** and the second set of articles **56** (and, from the moment of inertia, the combined mass of the first set of articles **44** and the second set of articles **56**) when the second washing compartment **54** is in the inserted position **58** and the second set of articles **56** is disposed in the second washing compartment **54** at least in part by calculating the torque (τ_{down}) that the electric motor **48** outputs while causing the rotational speed of the first washing compartment **40** with the first set of articles **44** and the second washing compartment **54** with the second set of articles **56** to decrease from the first substantially constant rotational speed (ω_1) to the second substantially constant rotational speed (ω_2) over the first period of time (Δ_{t1}). Similarly, In embodiments, the controller **64** estimates or calculates the collective moment of inertia of the first set of articles **44** and the second set of articles **56** (and, from the moment of inertia, the combined mass of the first set of articles **44** and the second set of articles **56**) when the second washing compartment **54** is in the inserted position **58** and the second set of articles **56** is disposed in the second washing compartment **54** at least in part by calculating the torque (τ_{up}) that the electric motor **48** outputs while causing the rotational speed of the first washing compartment **40** with the first set of articles **44** and the second washing compartment **54** with the second set of articles **56** to increase from the second substantially constant rotational speed (ω_2) to the first substantially constant rotational speed (ω_1) over the second period of time (Δ_{t2}). In other words, the controller **64** senses, estimates, or calculates the torque (τ_{down}) that the electric motor **48** outputs during the deceleration stage and the torque (τ_{up}) that the electric motor **48** outputs during the acceleration phase. The torques (τ_{down} and τ_{up}) that the controller **64** sense, estimate, or calculate can be the average torques during the deceleration stage and the acceleration stage, respectively. Note that in instances where the electric motor **48** does not output torque data directly to the controller **64**, the controller **64** can derive the torques during the acceleration phase (τ_{up}) and the torque during the deceleration phase (τ_{down}) from the average current of electricity that the electric motor **48** utilizes during the acceleration phase (I_{up}) and the average current of electricity that the electric motor **48** utilizes during the deceleration phase (I_{down}), respectively, because the torque that the electric motor **48** is delivering is proportional to the current.

In embodiments, the controller **64** estimates or calculates the moment of inertia of the first set of articles **44** and the second set of articles **56** collectively (and, from the moment of inertia, the collective mass of the first set of articles **44** and the second set of articles **56**), at least in part by estimating or calculating the moment of inertia of the first washing compartment **40** with the first set of articles **44** and the second washing compartment **54** with the second set of articles **56** via an equation that divides $(\tau_{up}-\tau_{down})$ by $(\alpha_{up}-\alpha_{down})$. An example of such an equation was derived above and the same principles apply now. However, note that the equation (10), reproduced below, will be the moment of inertia J_{total} of the first washing compartment **40** (with the first set of articles **44**) and the second washing compartment **54** (with the second set of articles **56**) collectively:

$$J_{total} = \frac{(\tau_{up} - \tau_{down})}{(\alpha_{up} - \alpha_{down})} \tag{10}$$

Using equation 11 below, the moment of inertia ($J_{swc+ssa}$) of only the second washing compartment **54** ("swc") and the second set of articles **56** ("ssa") can be determined:

$$J_{swc+ssa}=J_{total}-J_{fwc+fsa} \tag{11}$$

The moment of inertia ($J_{fwc+fsa}$) for the first washing compartment **40** (with the first set of articles **44**) is stored in the memory **68**, as detailed above. Thus the moment of inertia of only the second washing compartment **54** (with the second set of articles **56**), $J_{swc+ssa}$, can be determined. In addition, the moment of inertia for the second washing compartment **54** (J_{swc}) is known, constant, and stored in memory **58**. Accordingly, the moment of inertia for the second set of articles **56** ("ssa") can be determined from equation (12) below:

$$J_{ssa}=J_{swc+ssa}-J_{swc} \tag{12}$$

The mass ($mass_{ssa}$) of the second set of articles **56** can be approximated from the inertia of the second set of articles **56** (J_{ssa}) with equation (13) below:

$$mass_{ssa} = \frac{J_{ssa}}{r^2} \tag{13}$$

where r is an assumed radius of the second set of articles **56** inside the second washing compartment **54** relative to the axis **52**. In other words, estimating or calculating the mass of the second set of articles **56** ($mass_{ssa}$) in the second washing compartment **54** includes, at least in part, estimating or calculating: (a) the moment of inertia ($J_{fwc+fsa}$) of the

first washing compartment **40** and the first set of articles **44** when the second washing compartment **54** is in the removed position **59**; (b) the collective moment of inertia (J_{total}) of the first washing compartment **40**, the first set of articles **44**, the second washing compartment **54**, and the second set of articles **56** when the second washing compartment is in the inserted position **58**; and (c) subtracting (a) from (b) as in equation (12). Again, in some circumstances, the mass of the second set of articles **56** as estimated or calculated using the model detailed above will differ from the actual mass of the second set of articles **56**, because of modeling imprecision (such as that surrounding equation (13)) and "noise". Thus, the relationship between the mass of the second set of articles **56** estimated/calculated from the equation (13) and the model above and the true mass of the second set of articles **56** can be experimentally correlated, such that the model includes the controller **64** executing equation (14) below:

$$\text{mass}_{ssa\_actual}=f(J_{ssa})+N \quad (14)$$

where mass_{ssa_actual} is the true mass of the second set of articles **56**, or at least a better closer approximation thereof and N are the experimentally deduced noise factors, which will likely depend on the washing machine **10**. The noise factors (N) can be predicted using statistical modeling where it is experimentally or empirically tuned for a specific class or platform of products. The controller **64** can then cause the determined mass of the second set of articles **56** (mass_{ssa_actual}) to be stored in the memory **68**.

The method **72** further includes, at step **78**, adding a second volume of water to the second washing compartment **54**, without causing water added to the second washing compartment **54** to overflow from the second washing compartment **54** into the first washing compartment **40**. The second volume of water is determined as a function of the estimated or calculated mass of the second set of articles **56**. In embodiments, the second volume of water (V_{second}) is determined according to equation (15) below:

$$V_{second}=f(\text{mass}_{sac\_model}) \quad (15)$$

The second volume of water (V_{second}) can be experimentally correlated with the mass of the second set of articles **56** (mass_{sac_model}), and, in some instances, will depend on the geometry of the second washing compartment **54**. In embodiments, the second volume of water is proportional to the mass of the second set of articles **56**, will be of sufficient volume to allow for the laundering of the second set of articles **56**, but will not overflow into the first washing compartment **40**.

The method **72** further includes, at step **80**, adding a first volume of water to the first washing compartment **40**. Note that this step can occur simultaneously with or before step **78**. The first volume of water is determined as a function of the estimated or calculated mass of the first set of articles **44**. In embodiments, the first volume of water (V_{first}) is determined according to equation (16) below:

$$V_{first}=f(\text{mass}_{fsa\_actual}) \quad (16)$$

The first volume of water (V_{first}) can be experimentally correlated with the mass (mass_{fsa_actual}) of the first set of articles **44**, and, in embodiments, depend on the geometry of the first washing compartment **40**. In embodiments, the first volume of water is proportional to the mass of the first set of articles **44**, and will be of sufficient volume to allow for laundering of the first set of articles **44**, but not an excessive volume.

In a variation of the method **72**, after step **74**, instead of proceeding to step **76**, the method **72** proceeds to step **82**. At step **82**, the method **72** further includes the first washing compartment **40** and the second washing compartment **54** to rotate together at a predetermined rotational speed (ω_{pre}). The second washing compartment **54** is in the inserted position **58** after step **74** and contains the second set of articles **56**, and, as described in connection with step **73**, the first washing compartment **50** includes the first set of articles **44**. The controller **64** can cause the electric motor **48** to rotate the first washing compartment **40** and the second washing compartment **54** at the predetermined rotational speed (ω_{pre}).

Next, at step **84**, liquid from the external liquid source **62** flows from the external liquid source **62** and into the second washing compartment **54** while the first washing compartment **40** and the second washing compartment **54** are rotating at the predetermined rotational speed. The liquid can be water. The controller **64** can cause the liquid flow valve **60** to cause the liquid to flow into the second washing compartment **54**.

Next, at step **86**, the electric motor **48** is caused (such as via the controller **64** controlling the electric motor **48**) to maintain rotating the first washing compartment **40** and the second washing compartment **54** at the predetermined rotational speed (ω_{pre}) as liquid flows into the second washing compartment **54**, while monitoring the moment of inertia of the second washing compartment **54** together with the second set of articles **56** and the liquid in the second washing compartment **54**. The moment of inertia of the first washing compartment **40** with the first set of articles **44** was determined in step **74** and, thus, the moment of inertia of the second washing compartment **54** together with the second set of articles **56** and the liquid in the second washing compartment **54** can be repeatedly calculated and monitored. In embodiments, the controller **64** can monitor the moment of inertia of the second washing compartment **54** together with the second set of articles **56** and the liquid in the second washing compartment **54** as detailed above in the lead up to and including equation (11). The only difference is that the moment of inertia is a product of the mass of the liquid added to the second washing compartment **54**, in addition to the second set of articles **56** and the second washing compartment **54** itself. However, the controller **64** can repeatedly determine the moment of inertia in any suitable manner. In embodiments, the controller **64** determines a rate of change of the repeatedly determined moment of inertia. Moments of inertia may be determined in a variety of ways and additional description of methods for determining inertia may be found in U.S. Pat. No. 9,540,756; United States Patent Application Publication No. US2015-0047396A1; and U.S. Pat. No. 9,091,011, which are incorporated herein by reference in their entireties.

Next, at step **88**, as the moment of inertia meets or exceeds a predetermined value, or the rate of change of the moment of inertia satisfies a predetermined threshold, the electric motor **48** (such as from a command from the controller **64**) stops rotating the first washing compartment **40** and the second washing compartment **54** and to stop liquid from flowing from the liquid supply system into the second washing compartment **54**. In embodiments, these threshold values are stored in the memory **68** of the controller **64**. The predetermined value of the moment of inertia represents a combined mass of the second set of articles **56** and the volume of liquid added to the second washing compartment **54** that has a sufficient volume of liquid to wash the second set of articles **56** but insufficient volume of

liquid to cause the liquid to overflow into the first washing compartment **40**. The method **72** then proceeds to step **80**, where a volume of liquid is added to the first washing compartment **40** as a function of the determined mass of the first set of articles **44**.

After the method **72** is complete, the washing machine **10** then completes a wash cycle and any other desired functions to launder the first set of articles **44** and the second set of articles **56**.

According to one aspect of the present disclosure, a washing machine includes a tub. A first washing compartment is disposed within the tub to hold a first set of articles to be washed, the first set of articles having a mass. A second washing compartment holds a second set of articles to be washed, the second set of articles having a mass, the second washing compartment having an inserted position and a removed position. A liquid flow valve is configured to connect to an external liquid source to selectively control flow of liquid from the external liquid source and into either the first washing compartment, the second washing compartment, or both the first washing compartment and the second washing compartment. An electric motor is operably coupled to and configured to cause the first washing compartment to rotate, and operably coupled to and configured to cause the second washing compartment to rotate when the second washing compartment is in the inserted position but not in the removed position. A controller is in communication with the electric motor that estimates or calculates the mass of the second set of articles held by the second washing compartment and then calculates, as a function of the estimated or calculated mass of the second set of articles, a volume of water to be added to the second washing compartment.

According to another aspect of the present disclosure, the controller estimates or calculates the mass of the second set of articles ($mass_{ssa}$) at least in part by: (i) estimating or calculating a moment of inertia ($J_{fwc+fsa}$) of the first washing compartment and the first set of articles when the second washing compartment is in the removed position; and (ii) estimating or calculating the collective moment of inertia (J_{total}) of the first washing compartment, the first set of articles, the second washing compartment, and the second set of articles when the second washing compartment is in the inserted position; and then (iii) subtracting (i) from (ii).

According to another aspect of the present disclosure, the electric motor includes a shaft that rotates about an axis and that is operably connected to the first washing compartment such that as the electric motor causes the shaft to rotate about the axis, the first washing compartment also rotates about the axis; and the controller estimates or calculates the mass of the first set of articles when the second washing compartment is in the removed position at least in part by: (i) causing the first washing compartment with the first set of articles to rotate at a first substantially constant rotational speed (ω_1); (ii) causing the rotational speed of the first washing compartment with the first set of articles to decrease to a second substantially constant rotational speed (ω_2) over a first period of time (Δ_{t1}) for an average deceleration (α_{down}) of $(\omega_1-\omega_2)/\Delta_{t1}$; and (iii) causing the rotational speed of the first washing compartment with the first set of articles to increase from the second substantially constant rotational speed (ω_2) to the first substantially constant rotational speed (ω_1) over a second period of time (Δ_{t2}) for an average acceleration (α_{up}) of $(\alpha_{up})/\Delta_{t2}$.

According to another aspect of the present disclosure, the controller estimates or calculates the mass of the first set of articles when the second washing compartment is in the removed position at least in part by sensing, estimating, or calculating a torque (τ_{down}) that the electric motor outputs while causing the rotational speed of the first washing compartment with the first set of articles to decrease from the first substantially constant rotational speed (ω_1) to the second substantially constant rotational speed (ω_2) over the first period of time (Δ_{t1}).

According to another aspect of the present disclosure, the controller estimates or calculates the mass of the first set of articles when the second washing compartment is in the removed position at least in part by sensing, estimating, or calculating a torque (τ_{up}) that the electric motor outputs while causing the rotational speed of the first washing compartment with the first set of articles to increase from the second substantially constant rotational speed (ω_2) to the first substantially constant rotational speed (ω_1) over the second period of time (Δ_{t2}).

According to another aspect of the present disclosure, the controller estimates or calculates the mass of the first set of articles when the second washing compartment is in the removed position at least in part by estimating or calculating a moment of inertia of the first washing compartment with the first set of articles via an equation that divides ($\tau_{up}-\tau_{down}$) by ($\alpha_{up}-\alpha_{down}$).

According to another aspect of the present disclosure, the controller derives the torque during an acceleration phase (τ_{up}) and the torque during a deceleration phase (τ_{down}) from an average current of electricity that the electric motor utilizes during the acceleration phase (I_{up}) and the average current of electricity that the electric motor utilizes during the deceleration phase (I_{down}), respectively.

According to another aspect of the present disclosure, the electric motor is additionally operably connected to the second washing compartment such that as the electric motor causes the shaft to rotate about the axis, both the first washing compartment and the second washing compartment also rotate about the axis; and the controller estimates or calculates the collective mass of the first set of articles and the second set of articles when the second washing compartment is in the inserted position and the second set of articles is disposed in the second washing compartment at least in part by: (i) causing the first washing compartment with the first set of articles and the second washing compartment with the second set of articles to rotate at a first substantially constant rotational speed (ω_1); (ii) causing the rotational speed of the first washing compartment with the first set of articles and the second washing compartment with the second set of articles to decrease to a second substantially constant rotational speed (ω_2) over a first period of time (Δ_{t1}) for an average deceleration (α_{down}) of $(\omega_1-\omega_2)/\Delta_{t1}$; and (iii) causing the rotational speed of the first washing compartment with the first set of articles and the second washing compartment with the second set of articles to increase to the first substantially constant rotational speed (ω_1) over a second period of time (Δ_{t2}) for an average acceleration (α_{up}) of $(\Omega_2-\omega_1)/\Delta_{t2}$.

According to another aspect of the present disclosure, the controller estimates or calculates the collective mass of the first set of articles and the second set of articles when the second washing compartment is in the inserted position and the second set of articles is disposed in the second washing compartment at least in part by calculating a torque (τ_{down}) that the electric motor outputs while causing the rotational speed of the first washing compartment with the first set of articles and the second washing compartment with the second set of articles to decrease from the first substantially

constant rotational speed (ω_1) to the second substantially constant rotational speed (ω_2) over the first period of time (Δ_{t1}).

According to another aspect of the present disclosure, the controller estimates or calculates the collective mass of the first set of articles and the second set of articles when the second washing compartment is in the inserted position and the second set of articles is disposed in the second washing compartment at least in part by calculating a torque (τ_{up}) that the electric motor outputs while causing the rotational speed of the first washing compartment with the first set of articles and the second washing compartment with the second set of articles to increase from the second substantially constant rotational speed (ω_2) to the first substantially constant rotational speed (ω_1) over the second period of time (Δ_{t2}).

According to another aspect of the present disclosure, the controller estimates or calculates the collective mass of the first set of articles and the second set of articles when the second washing compartment is in the inserted position and the second set of articles is disposed in the second washing compartment at least in part by estimating or calculating a moment of inertia of the first washing compartment with the first set of articles and the second washing compartment with the second set of articles via an equation that divides ($\tau_{up}-\tau_{down}$) by ($\alpha_{up}-\alpha_{down}$).

According to another aspect of the present disclosure, the controller derives the torque during the acceleration phase (τ_{up}) and the torque during the deceleration phase (τ_{down}) from the average current of electricity that the electric motor utilizes during the acceleration phase (I_{up}) and the average current of electricity that the electric motor utilizes during the deceleration phase (I_{down}), respectively.

According to yet another aspect of the present disclosure, a washing machine includes a tub. A first washing compartment is disposed within the tub to hold a first set of articles to be washed, the first set of articles having a mass. A second washing compartment holds a second set of articles to be washed, the second set of articles having a mass, the second washing compartment having an inserted position and a removed position. A liquid flow valve is configured to connect to an external liquid source to selectively control flow of liquid from the external liquid source and into either the first washing compartment, the second washing compartment, or both the first washing compartment and the second washing compartment. An electric motor is operably coupled to and configured to cause the first washing compartment to rotate, and operably coupled to and configured to cause both the first washing compartment and the second washing compartment to rotate when the second washing compartment is in the inserted position but not in the removed position. A controller is in communication with the electric motor and is configured to: (a) to cause the electric motor to rotate together the first washing compartment and the second washing compartment at a predetermined rotational speed when the second washing compartment is in the inserted position and contains the second set of articles; (b) to cause liquid to flow from the external liquid source and into the second washing compartment while the second washing compartment is rotating at the predetermined rotational speed; (c) to cause the electric motor to maintain rotating the first washing compartment and the second washing compartment at the predetermined rotational speed, while the monitoring the moment of inertia of the second washing compartment together with the second set of articles and the liquid in the second washing compartment; and (d) as the moment of inertia meets or exceeds a predetermined value, or as the moment of inertia meets or exceeds a predetermined rate of change, to cause the electric motor to stop rotating the first washing compartment and the second washing compartment and to stop liquid from flowing from a liquid supply system into the second washing compartment.

According to yet another aspect of the present disclosure, the controller is further configured to estimate or calculate the mass of the first set of articles in the first washing compartment, when the second washing compartment is in the removed position.

According to yet another aspect of the present disclosure, the controller is configured to estimate or calculate the mass of the first set of articles in the first washing compartment by manipulating the electric motor: (i) to cause the first washing compartment with the first set of articles to rotate at a first substantially constant rotational speed (ω_1); (ii) to cause the rotational speed of the first washing compartment with the first set of articles to decrease to a second substantially constant rotational speed (ω_2) over a first period of time (Δ_{t1}) for an average deceleration (α_{down}) of $(\omega_1-\omega_2)/\Delta_{t1}$; and (iii) to cause the rotational speed of the first washing compartment with the first set of articles to increase to the first substantially constant rotational speed (ω_1) over a second period of time (Δ_{t2}) for an average acceleration (α_{up}) of $(\omega_2-\omega_1)/\Delta_{t2}$.

According to yet another aspect of the present disclosure, the controller is configured: (d) as the moment of inertia meets or exceeds a predetermined rate of change, to cause the electric motor to stop rotating the first washing compartment and the second washing compartment and to stop liquid from flowing from a liquid supply system into the second washing compartment.

According to still yet another aspect of the present disclosure, a method of adding a volume of water to a removable washing compartment of a washing machine includes after a first set of articles is loaded into a first washing compartment of a washing machine and while a second washing compartment of the washing machine is in a removed position, estimating or calculating a mass of the first set of articles in the first washing compartment; after the second washing compartment is placed into an inserted position and a second set of articles is loaded into the second washing compartment, estimating or calculating a mass of the second set of articles in the second washing compartment; adding a second volume of water to the second washing compartment, without causing water added to the second washing compartment to overflow from the second washing compartment into the first washing compartment, the second volume of water determined as a function of the estimated or calculated mass of the second set of articles; and adding a first volume of water to the first washing compartment, the first volume of water determined as a function of the estimated or calculated mass of the first set of articles.

According to still yet another aspect of the present disclosure, estimating or calculating a mass of the first set of articles in the first washing compartment includes causing an electric motor of the washing machine to rotate the first washing compartment about an axis and evaluating one or more of: (i) torque that the electric motor outputs while rotating the first washing compartment; (ii) rotational acceleration and/or deceleration of the first washing compartment; (iii) the moment of inertia of the first washing compartment while the electric motor rotates the first washing compartment; and (iv) the electrical current that the electric motor is utilizing while the electric motor rotates the first washing compartment.

According to still yet another aspect of the present disclosure, estimating or calculating a mass of the second set of articles in the second washing compartment includes causing the electric motor of the washing machine to rotate the first washing compartment together with the second washing compartment about an axis and evaluating one or more of: (i) torque that the electric motor outputs while rotating the first washing compartment together with the second washing compartment; (ii) rotational acceleration and/or deceleration of the first washing compartment together with the second washing compartment; (iii) moment(s) of inertia of the first washing compartment together with the second washing compartment while the electric motor rotates the first washing compartment together with the second washing compartment; and (iv) electrical current that the electric motor is utilizing while the electric motor rotates the first washing compartment together with the second washing compartment.

According to still yet another aspect of the present disclosure, estimating or calculating a mass of the second set of articles in the second washing compartment includes determining: (a) the moment of inertia of the first washing compartment and the first set of articles; (b) the moment of inertia of the first washing compartment, the first set of articles, the second washing compartment, and the second set of articles together; and (c) subtracting (a) from (b).

It will be understood by one having ordinary skill in the art that construction of the described disclosure and other components is not limited to any specific material. Other exemplary embodiments of the disclosure disclosed herein may be formed from a wide variety of materials, unless described otherwise herein.

For purposes of this disclosure, the term "coupled" (in all of its forms, couple, coupling, coupled, etc.) generally means the joining of two components (electrical or mechanical) directly or indirectly to one another. Such joining may be stationary in nature or movable in nature. Such joining may be achieved with the two components (electrical or mechanical) and any additional intermediate members being integrally formed as a single unitary body with one another or with the two components. Such joining may be permanent in nature or may be removable or releasable in nature unless otherwise stated.

It is also important to note that the construction and arrangement of the elements of the disclosure as shown in the exemplary embodiments is illustrative only. Although only a few embodiments of the present innovations have been described in detail in this disclosure, those skilled in the art who review this disclosure will readily appreciate that many modifications are possible (e.g., variations in sizes, dimensions, structures, shapes and proportions of the various elements, values of parameters, mounting arrangements, use of materials, colors, orientations, etc.) without materially departing from the novel teachings and advantages of the subject matter recited. For example, elements shown as integrally formed may be constructed of multiple parts or elements shown as multiple parts may be integrally formed, the operation of the interfaces may be reversed or otherwise varied, the length or width of the structures and/or members or connector or other elements of the system may be varied, the nature or number of adjustment positions provided between the elements may be varied. It should be noted that the elements and/or assemblies of the system may be constructed from any of a wide variety of materials that provide sufficient strength or durability, in any of a wide variety of colors, textures, and combinations. Accordingly, all such modifications are intended to be included within the scope of the present innovations. Other substitutions, modifications, changes, and omissions may be made in the design, operating conditions, and arrangement of the desired and other exemplary embodiments without departing from the spirit of the present innovations.

It will be understood that any described processes or steps within described processes may be combined with other disclosed processes or steps to form structures within the scope of the present disclosure. The exemplary structures and processes disclosed herein are for illustrative purposes and are not to be construed as limiting.

What is claimed is:

1. A method of adding a volume of water to a removable washing compartment of a washing machine comprising:

after a first set of articles is loaded into a first washing compartment of a washing machine and while a second washing compartment of the washing machine is in a removed position, estimating or calculating a mass of the first set of articles in the first washing compartment;

after the second washing compartment is placed into an inserted position and a second set of articles is loaded into the second washing compartment, estimating or calculating a mass of the second set of articles in the second washing compartment;

adding a second volume of water to the second washing compartment, without causing water added to the second washing compartment to overflow from the second washing compartment into the first washing compartment, the second volume of water determined as a function of the estimated or calculated mass of the second set of articles; and

adding a first volume of water to the first washing compartment, the first volume of water determined as a function of the estimated or calculated mass of the first set of articles.

2. The method of claim **1**,

estimating or calculating the mass of the first set of articles in the first washing compartment includes causing an electric motor of the washing machine to rotate the first washing compartment about an axis and evaluating one or more of: (i) torque that the electric motor outputs while rotating the first washing compartment; (ii) rotational acceleration and/or deceleration of the first washing compartment; (iii) moment of inertia of the first washing compartment while the electric motor rotates the first washing compartment; and (iv) electrical current that the electric motor is utilizing while the electric motor rotates the first washing compartment.

3. The method of claim **1**,

estimating or calculating the mass of the second set of articles in the second washing compartment includes causing an electric motor of the washing machine to rotate the first washing compartment together with the second washing compartment about an axis and evaluating one or more of: (i) torque that the electric motor outputs while rotating the first washing compartment together with the second washing compartment; (ii) rotational acceleration and/or deceleration of the first washing compartment together with the second washing compartment; (iii) moment of inertia of the first washing compartment together with the second washing compartment while the electric motor rotates the first washing compartment together with the second washing compartment; and (iv) electrical current that the electric motor is utilizing while the electric motor rotates the first washing compartment together with the second washing compartment.

4. The method of claim 3,

estimating or calculating the mass of the second set of articles in the second washing compartment includes determining: (a) the moment of inertia of the first washing compartment and the first set of articles; (b) the moment of inertia of the first washing compartment, the first set of articles, the second washing compartment, and the second set of articles together; and (c) subtracting (a) from (b).

5. A method of operating a washing machine comprising:

estimating or calculating a mass of a first set of articles held by a first washing compartment of a washing machine while a second washing compartment of the washing machine is in a removed position;

estimating or calculating a mass of a second set of articles held by the second washing compartment when the second washing compartment is in an inserted position; and

calculating, as a function of the estimated or calculated mass of the second set of articles, a volume of water to be added to the second washing compartment.

6. The method of claim 5, wherein

the first set of articles and the second set of articles comprise clothing.

7. The method of claim 5, wherein

the volume of water calculated to be added to the second washing compartment is insufficient to overflow into the first washing compartment.

8. The method of claim 5, wherein

in the inserted position of the second washing compartment, (i) the second washing compartment is disposed above the first washing compartment and (ii) the first washing compartment partially surrounds the second washing compartment.

9. The method of claim 5, wherein

in the inserted position of the second washing compartment, the second washing compartment is disposed below a lid of the washing machine that is in a closed position.

10. The method of claim 5 further comprising:

simultaneously washing the first set of articles and the second set of articles in the washing machine.

11. The method of claim 5, wherein

the washing machine is of a top loading variety.

12. The method of claim 5, wherein

a single electric motor causes both the first washing compartment and the second washing compartment to rotate about a common axis.

13. The method of claim 5 further comprising:

before estimating or calculating the mass of the first set of articles held by the first washing compartment while the second washing compartment is in the removed position, loading the first set of articles into the first washing compartment.

14. A method of operating a washing machine comprising:

with a washing machine that comprises (i) a first washing compartment; (ii) a second washing compartment that has an inserted position and a removed position; and (iii) an electric motor,

while the first washing compartment holds a first set of articles and the second washing compartment of the washing machine is in a removed position,

(1) with the electric motor, rotating the first washing compartment at a first substantially constant rotational speed (ω_1);

(2) in a deceleration step, decelerating the first washing compartment from the first substantially constant rotational speed (ω_1) to a second substantially constant rotational speed (ω_2) over a first period of time (Δ_{t1}) for an average deceleration (α_{down}) of

$$\frac{(\omega_1-\omega_2)}{\Delta_{t1}};$$

(3) sensing, estimating, or calculating a torque (τ_{down}) that the electric motor outputs during the deceleration step;

(4) in an acceleration step, accelerating the first washing compartment from the second substantially constant rotational speed (ω_2) to the first substantially constant rotational speed (ω_1) over a second period of time (Δ_{t2}) for an average acceleration (α_{up}) of

$$\frac{(\omega_2-\omega_1)}{\Delta_{t2}};$$

(5) sensing, estimating, or calculating a torque (τ_{up}) that the electric motor outputs during the acceleration step; and

(6) placing the second washing compartment in the inserted position; and

while the second washing compartment is in the inserted position holding a second set of articles and the first washing compartment holds the first set of articles,

(1) with the electric motor, rotating the first washing compartment and the second washing compartment at a first substantially constant rotational speed (ω_1);

(2) in a deceleration step, decelerating the first washing compartment and the second washing compartment from the first substantially constant rotational speed (ω_1) to a second substantially constant rotational speed (ω_2) over a first period of time (Δ_{t1}) for an average deceleration (α_{down}) of

$$\frac{(\omega_1-\omega_2)}{\Delta_{t1}};$$

(3) sensing, estimating, or calculating a torque (τ_{down}) that the electric motor outputs during the deceleration step;

(4) in an acceleration step, accelerating the first washing compartment and the second washing compartment from the second substantially constant rotational speed (ω_2) to the first substantially constant rotational speed (ω_1) over a second period of time (Δ_{t2}) for an average acceleration (α_{up}) of

$$\frac{(\omega_2-\omega_1)}{\Delta_{t2}};$$

(5) sensing, estimating, or calculating a torque (τ_{up}) that the electric motor outputs during the acceleration step; and

(6) determining a volume of water (V_{second}) to add to the second washing compartment as a function of at

least the torque (τ_{up}) and the torque (τ_{down}) sensed, estimated, or calculated; and

(7) adding the volume of water (V_{second}) to the second washing compartment.

15. The method of claim **14**, wherein

the torques (τ_{up}) and the torques (τ_{down}) that the electric motor outputs are estimated or calculated at least in part as a function of the current that the electric motor utilized during the acceleration steps (I_{up}) and the deceleration steps (I_{down}).

16. The method of claim **14** further comprising:

determining a volume of water (V_{first}) to add to the first washing compartment as a function of at least the torque (τ_{up}) and the torque (τ_{down}) sensed, estimated, or calculated while the first washing compartment holds the first set of articles and the second washing compartment is in the removed position; and

adding the volume of water (V_{first}) to the first washing compartment.

17. The method of claim **14**, wherein

the volume of water (V_{second}) determined to be added to the second washing compartment is insufficient to overflow into the first washing compartment.

18. The method of claim **14** further comprising:

while the first washing compartment holds the first set of articles and the second washing compartment of the washing machine is in the removed position, estimating or calculating a moment of inertia of the first set of articles (J_{fsa}) as a function of at least a predetermined moment of inertia of the first washing compartment (J_{fwc}), the torque (τ_{up}), the torque (τ_{down}), the acceleration (α_{up}), and the deceleration (α_{down});

determining a volume of water (V_{first}) to add to the first washing compartment as a function of at least the moment of inertia of the first set of articles (J_{fsa}); and

adding the volume of water (V_{first}) to the first washing compartment.

19. The method of claim **14**, wherein

determining the volume of water (V_{second}) to add to the second washing compartment is further a function of at least a predetermined moment of inertia of the second washing compartment (J_{swc}).

20. The method of claim **14**, wherein

the electric motor causes both the first washing compartment and the second washing compartment to rotate about a common axis.

* * * * *