June 21, 1938. S. M. DEL CAMP 2,121,521

ELECTRICAL CONNECTER PLUG

Filed April 2, 1936

Fig. 1.

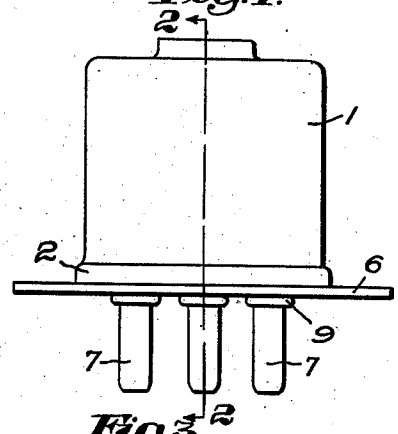


Fig. 2.

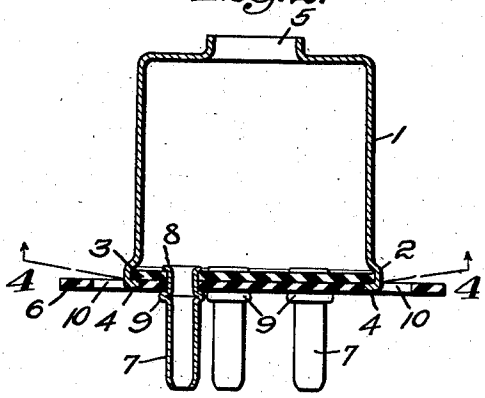


Fig. 3.

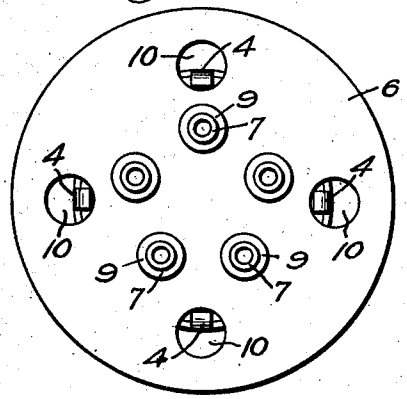


Fig. 4.

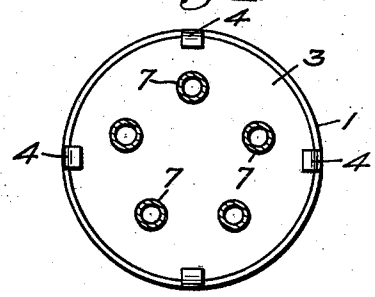


Fig. 5.

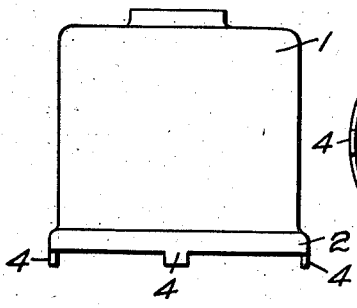


Fig. 6.

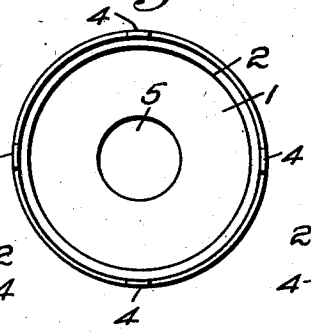


Fig. 7.

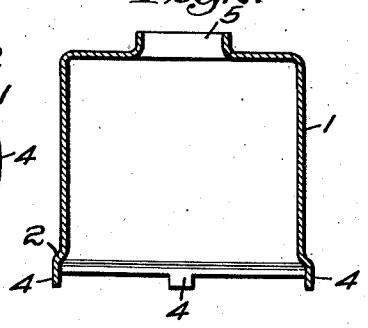


Inventor:
Scipione M. Del Camp.
by Walter S. Jones
Atty.

Patented June 21, 1938 2,121,521

# UNITED STATES PATENT OFFICE

2,121,521

## ELECTRICAL CONNECTER PLUG

Scipione M. Del Camp, Maywood, Ill., assignor to Cinch Manufacturing Corporation, Chicago, Ill., a corporation of Illinois

Application April 2, 1936, Serial No. 72,326

1 Claim. (Cl. 173—361)

My invention relates to an improved plug for electrical connections.

One of the objects of my invention is to provide an electrical plug which is constructed in a way to prevent physical contact between the operator's fingers and the prongs of the plug when the plug is inserted into or removed from a cooperating electrical socket. The use of such a device is particularly desirable when one or more of the plug prongs carries a relatively high voltage.

Referring to the drawing, in which I have illustrated a preferred embodiment of my invention:—

Fig. 1 is a plan view of my improved electrical plug member;

Fig. 2 is a section taken on the line 2—2 of Fig. 1;

Fig. 3 is a bottom plan view of the plug member shown in Fig. 1;

Fig. 4 is a section taken along the line 4—4 of Fig. 2;

Fig. 5 is a plan view of the container part of my plug member;

Fig. 6 is a bottom plan view of the container shown in Fig. 5; and

Fig. 7 is a sectional view of the container shown in Fig. 5.

Referring now in detail to the drawing, I have shown in Figs. 1–3 an electrical plug member having a housing part in the form of a sheet metal container 1 which may be of a tubular or any other suitable shape. The container 1 is provided, in my preferred form, with a peripheral flange 2 formed from the material of the container adjacent to an open end (Figs. 5 and 7). An insulating plate 3 is disposed within the flange 2 and is held in fixed assembly therewith by means of a plurality of finger-shaped elements 4 integral with the material of the container at the open end and bent over, as shown in Figs. 2 and 4, to engage one face of the insulating plate 3. An opening 5 is extruded on the side or end of the container 1 directly opposite to the end carrying the plate 3 to allow the entrance of a wire or group of wires into the container.

The main feature of my invention is the relatively large insulating plate 6 which is fixed at the open end of the container 1 in substantially adjacent relation to the plate 3. A plurality of contact prongs 7 is carried by the plates 3 and 6 and adapted for contact with cooperating contact terminals of a socket member (not shown). Each of the contact prongs 7 is turned over at one of its free ends so as to provide a head portion 8 engaging one surface of the plate 3. The shank of each prong 7 is collapsed to form a peripheral bead 9 at a predetermined position on its length so that the bead will lie adjacent to the outside surface of the plate 6, as most clearly shown in Figs. 1 and 2. After the bead 9 has been formed, the insulating plates 3 and 6 are in fixed assembly one with another between the head 8 and the bead 22. The large plate 6, in my preferred form, is provided with a series of apertures 10 (Fig. 10) which are located at predetermined points within the periphery of the plate to conform with the positions of the finger-shaped elements 4. The purpose of the apertures 10 is to provide a space for receiving the elements 4 when they are bent to engage the plate 3 so that they will not interfere to prevent disposition of the plate 6 in adjacent relationship to the plate 3.

The plate 6 is purposely formed of such dimensions as to make the prongs 7 inaccessible to the fingers of the operator when the container 1, or the plate 6 itself, is grasped for engagement with or removal from a socket member, not shown. For this reason it will be noticed that the plate 6 is of substantially greater diameter than the diameter of the container 1 adjacent to its open end and forms a peripheral flange around the container 1 at the open end (Figs. 1–3) with the result that the operator's fingers, when in contact with the container 1, are prevented from slipping over the edge and touching any one of the prongs 7. Thus it will be seen that as a result of my invention I have provided a simple and inexpensive means for carrying out the purpose in mind.

Although I have illustrated and described a preferred embodiment of my invention, I do not wish to be limited thereby because the scope of my invention is best defined in the following claim.

I claim:

A plug for electrical connections including a tubular sheet metal container having an open end, a plurality of fingers integral with one of said open ends, an insulating plate of small diameter and an insulating plate of large diameter in fixed assembly with said container at said open end, said large plate having a number of apertures located at predetermined points within the periphery thereof and equal in number to the number of said fingers, said fingers disposed within the apertures of said large plate and in clamping engagement with said small plate whereby said small plate is secured firmly to said container within said open end, and a plurality of contact prongs carried by said plates, said prongs having integral means engaging said plates between them whereby said plates are held in assembled relation, said large plate having a diameter substantially larger than said container adjacent said open end.

SCIPIONE M. DEL CAMP.