US00D339549S

United States Patent [19]

Hermanson

[11] **Patent Number: Des. 339,549**

[45] **Date of Patent: ** Sep. 21, 1993**

[54] **CHRISTMAS TREE STAND**

[75] Inventor: **Terry Hermanson**, New York, N.Y.

[73] Assignee: **Mr. Christmas, Inc.**, New York, N.Y.

[**] Term: **14 Years**

[21] Appl. No.: **839,240**

[22] Filed: **Feb. 20, 1992**

[52] **U.S. Cl.** **D11/130.1**

[58] **Field of Search** D11/130.1; 248/511, 248/519, 523, 526; 47/40.5

[56] **References Cited**

U.S. PATENT DOCUMENTS

D. 58,830	8/1921	Roesler	D11/130.1
D. 268,460	4/1983	Ives	D11/130.1
646,364	3/1900	Donnelly	248/523
952,655	3/1910	Wagner .	
2,189,687	2/1940	Thomas	D11/130.1 X
2,840,331	6/1958	Clifton	D11/130.1 X
3,820,749	6/1974	Leonard et al.	D11/130.1 X

Primary Examiner—Bernard Ansher
Assistant Examiner—Dominic Simone
Attorney, Agent, or Firm—Cohen, Pontani, Lieberman, Pavane

[57] **CLAIM**

The ornamental design for Christmas tree stand, as shown as described.

DESCRIPTION

FIG. **1** is a perspective view of a Christmas tree stand showing my new design, the artificial Christmas tree shown in broken lines for illustrative purposes only;
FIG. **2** is an enlarged top plan view thereof;
FIG. **3** is an enlarged side elevational view thereof; and,
FIG. **4** is an enlarged bottom plan view thereof.

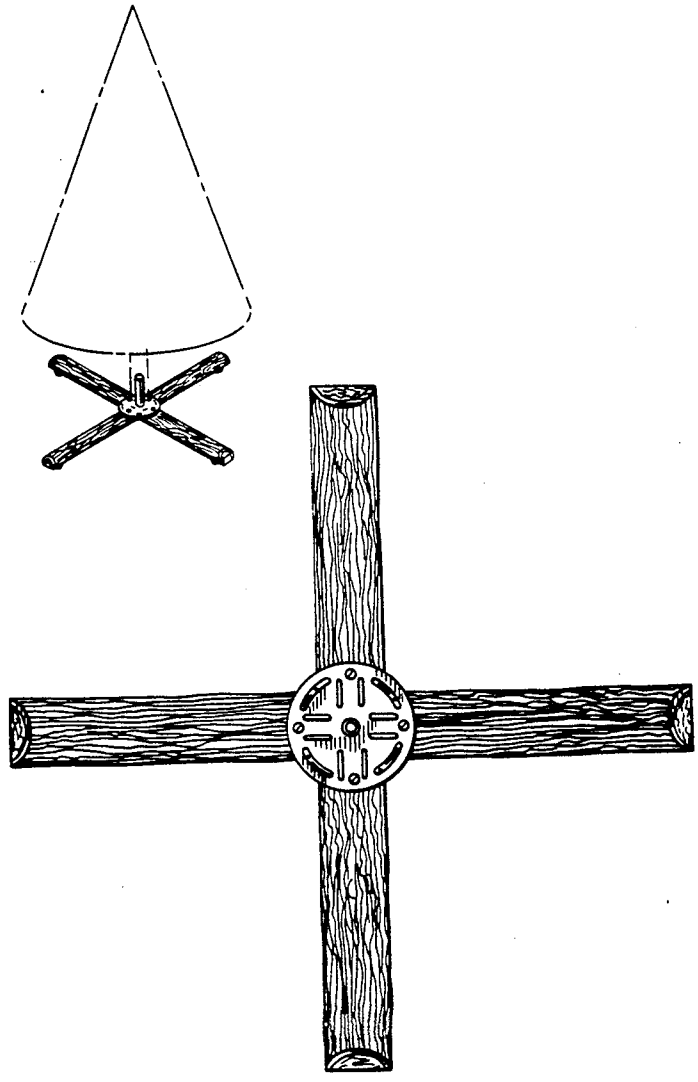

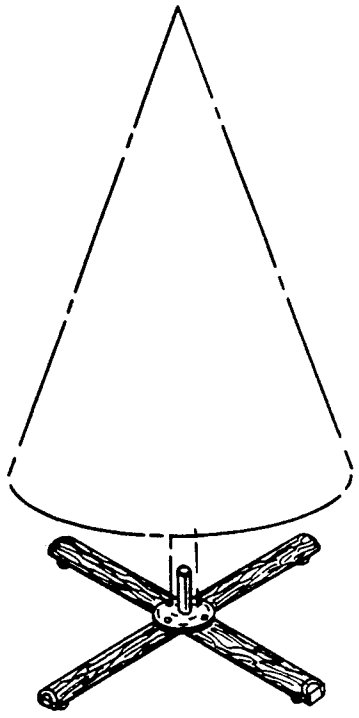

FIG. 1

FIG. 2

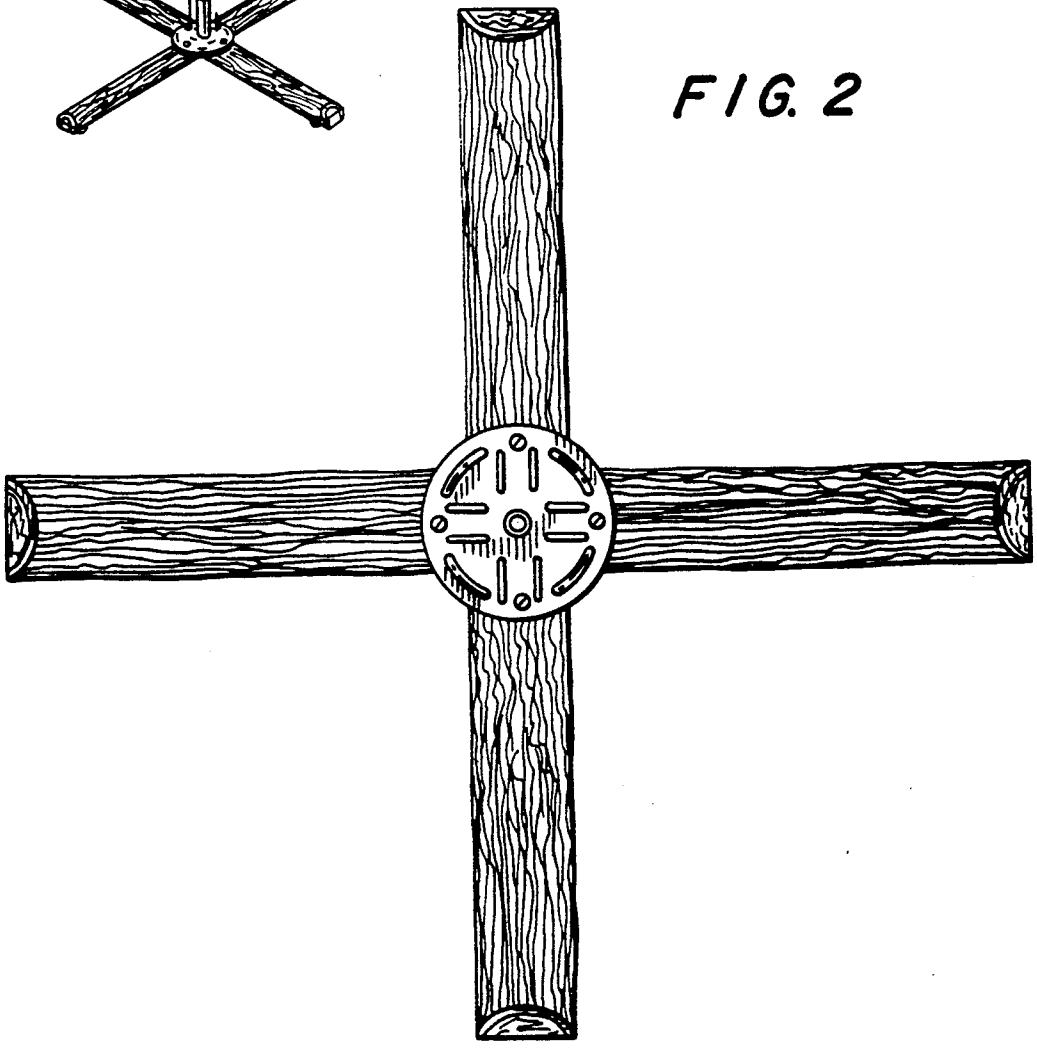

FIG. 3

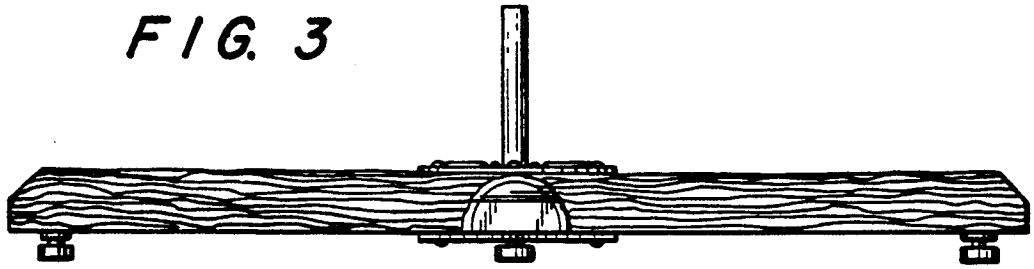

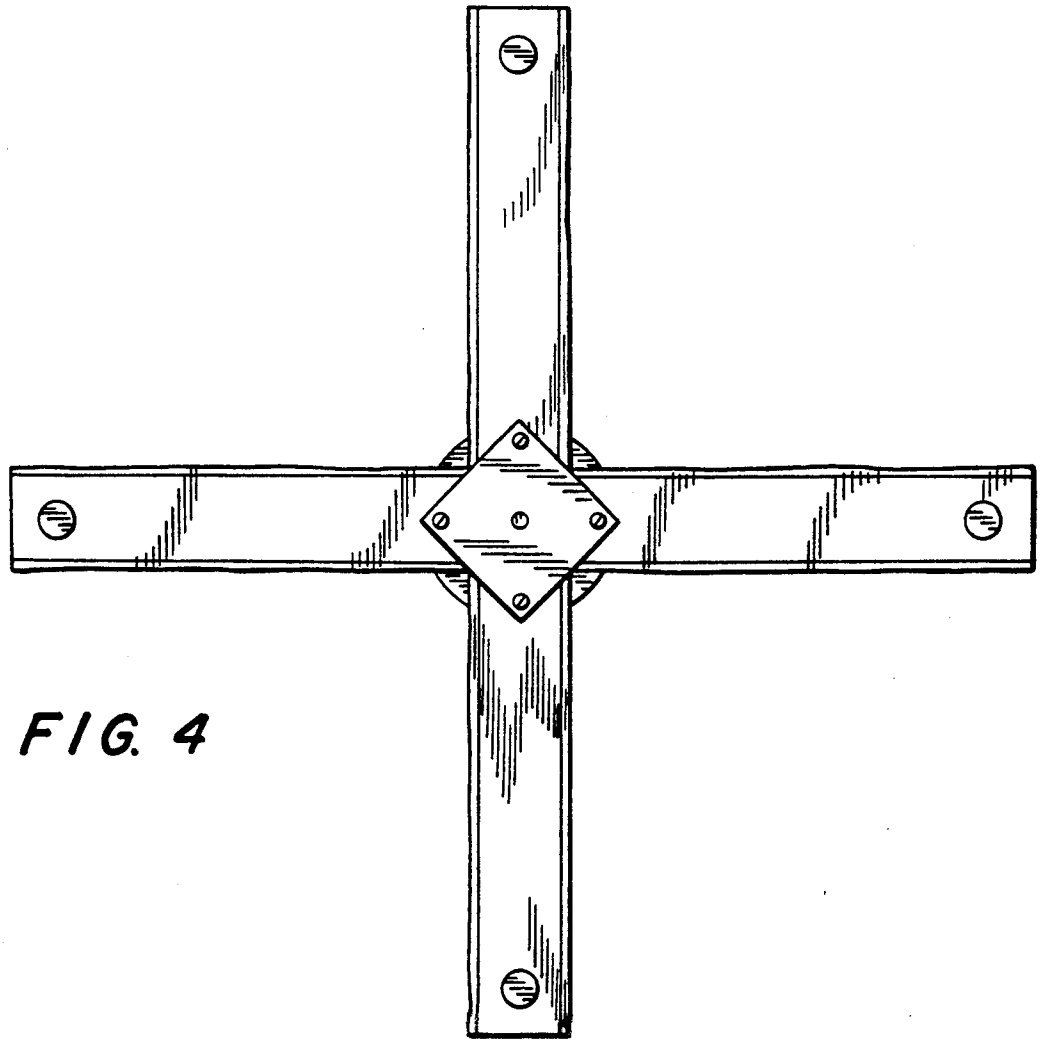

FIG. 4