Dec. 20, 1938. H. CASTADY 2,140,617

ADJUSTABLE SCAFFOLD

Filed June 15, 1937 2 Sheets-Sheet 1

Fig. 1.

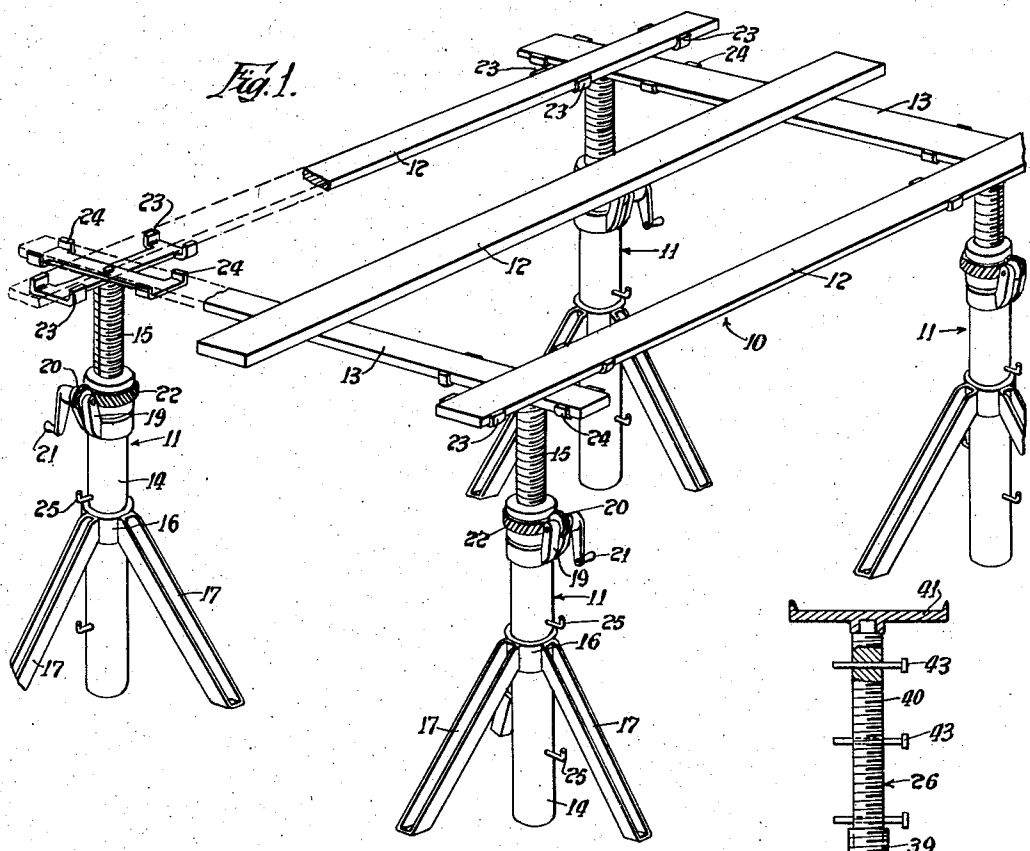

Fig. 2.

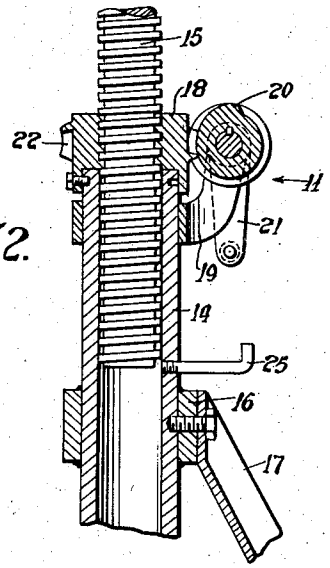

Fig. 3.

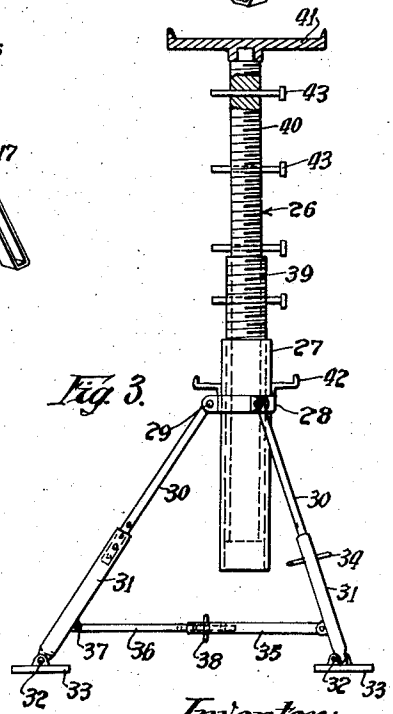

Inventor:
Harry Castady,

By:
Charles B. Cannon

His Attorney.

Dec. 20, 1938. H. CASTADY 2,140,617

ADJUSTABLE SCAFFOLD

Filed June 15, 1937 2 Sheets-Sheet 2

Fig. 4.

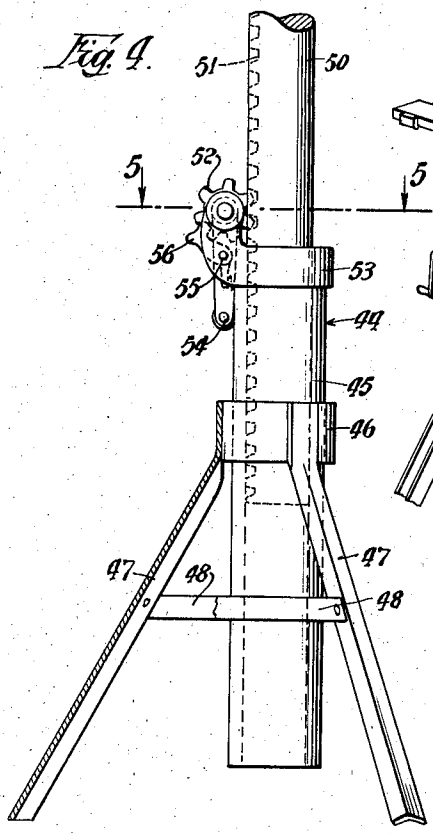

Fig. 6.

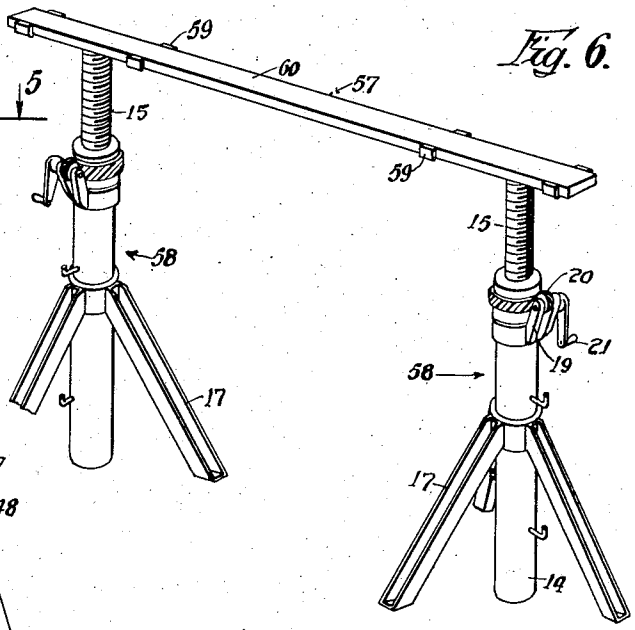

Fig. 5.

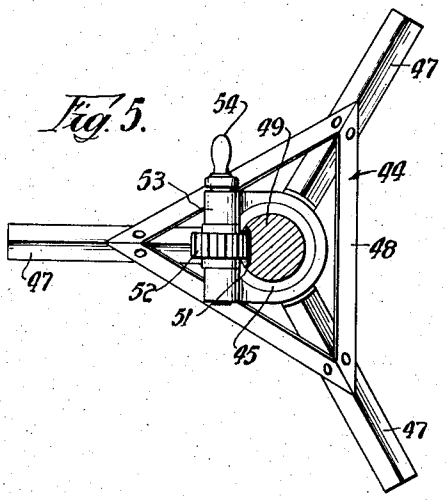

Inventor:
Harry Castady.

By: Charles B. Cannon

His Attorney.

Patented Dec. 20, 1938 2,140,617

UNITED STATES PATENT OFFICE

2,140,617

ADJUSTABLE SCAFFOLD

Harry Castady, Chicago, Ill.

Application June 15, 1937, Serial No. 148,300

8 Claims. (Cl. 304—4)

This invention relates to an adjustable scaffold.

It is an object of this invention to provide an improved adjustable scaffold which is relatively simple and inexpensive in construction and efficient in use.

Another object of the present invention is to provide a new and improved adjustable scaffold for use by painters, paperhangers and other workmen, and by means of which the platform or planking of the scaffold may be adjusted vertically to various heights, as desired.

An additional object of the present invention is to provide a new and improved adjustable supporting and lifting device by means of which the planking or platform of the scaffold may be adjusted to the desired vertical height.

Other objects will appear hereinafter.

The invention consists in the novel combination and arrangement of parts to be hereinafter described and claimed.

The invention will be best understood by reference to the accompanying drawings showing the preferred form of construction, and in which:

Fig. 1 is a perspective view showing a preferred form of the new adjustable scaffold;

Fig. 2 is a fragmentary vertical sectional view showing a preferred form of the adjustable lifting and supporting device which forms a part of the new scaffold;

Fig. 3 is a side elevational view of a modified form of the adjustable lifting and supporting device which is shown in Figs. 1 and 2;

Fig. 4 is a fragmentary side elevational view illustrating another modified form of the new adjustable lifting and supporting device;

Fig. 5 is a view, on line 5—5 in Fig. 4, partly in section and partly in top plan; and

Fig. 6 is a perspective view of a modified form of the new adjustable scaffold.

A preferred form of the new adjustable scaffold is shown in assembled position in Fig. 1, is therein generally indicated at 10, and comprises a group of four adjustable lifting and supporting devices which are generally indicated at 11, and one of which is shown in detail in Fig. 2; and oppositely extending planks 12 and 13 which are carried thereby and which form a platform or support for painters or other workmen, when the new scaffold is in use.

Each of the adjustable lifting and supporting devices 11 includes a vertical standard or column 14 and mounted on this column 14, at the upper end thereof, is a collar 18, into which is threaded a jack screw 15. Attached to the standard 14 of each of the devices 11, by means of a collar 16, is a tripod of three braces 17 for holding the corresponding device in vertical position.

Mounted on the column 14, adjacent the upper end thereof, in any suitable manner, as by welding, is a supporting bracket 19. Rotatably mounted in this bracket 19 is a worm gear 20, which is operable by a hand crank 21, and this worm gear 20 is engageable with a worm screw 22 which is formed on the peripheral surface of the corresponding collar 18.

Mounted on the jack screw 15 of each of the adjustable lifting and supporting devices 11, at the upper end thereof, and in any suitable manner, is a pair of aligned cross arms 23 for the reception of an end portion of one of the longitudinally extending planks 13 of the platform, and also mounted on the upper end portion of each jack screw 15 is a pair of cross arms 24 for the reception of an end portion of one of the transverse planks 13 of the platform. It is to be noted, in this connection, that the cross arms 23 are arranged somewhat above the cross arms 24, for reasons which will become apparent presently.

Also mounted in each of the columns 14, in any suitable manner, is a series of vertically spaced steps 25 for use by the workmen in climbing to the top of the scaffold, that is, up onto the platform of the same.

In the use of the new scaffold the lifting and supporting devices 11 are arranged at the corners of the platform of the proposed scaffold and the planks 12 and 13 are then laid in position of use, as shown, with the end portions of the transverse or cross planks 13 laid in the lower cross arms 24, and with the ends of the planks 12 laid in the upper cross arms 23. The planks 12 and 13 may then be raised to the desired height of the platform by rotating the cranks 21 which act, through the worm gears 20, to rotate the jack screws 15 and thus raise the latter and the cross arms 23—24, and the planks 12—13 carried thereby, up to the desired height of the platform, and this procedure may be reversed, that is, the jacks 15 and their cross arms 23—24, and the planks 12—13 carried thereby, may be lowered by rotating the cranks 21 in the opposite direction.

In this manner an efficient and relatively inexpensive adjustable scaffold is provided for use by painters and other workmen and which may be readily assembled and raised and lowered conveniently, and with less time and labor than is required in the building of the scaffolds now in use, and without necessitating the use of the

very considerable amount of expensive lumber now used in the building of non-adjustable scaffolds, thus providing for economy in both time and labor.

Another advantage of the new scaffold is that it may readily be taken down and moved from place to place as required, and with much less time and effort, than is required to move the wooden scaffolds now in general use, while still maintaining the desired feature and advantage of its adjustability.

A modified form of the new adjustable lifting and supporting unit is shown in Fig. 3, is therein generally indicated at 26, and comprises a vertical standard or column 27 on which is mounted, in any suitable manner, a collar 28. Pivotally mounted at their upper ends on the collar 28, as at 29, are brace rods 30 each of which has telescoping engagement at its lower end in a tubular brace 31. Each of these tubular braces 31 is pivotally mounted at its lower end, as at 32, in a base or pedestal 33, and each pair of the tubular braces 31 and arms 30 may be held in adjusted position by means of a pin 34 which is inserted through corresponding openings which are formed therein. In this form of the new lifting device each two of the adjustable braces 30—31 are interconnected by a pair of telescoping adjustable links 35—36 which are pivotally connected, at their outer ends, as at 37, to the tubular sections 31 of the adjustable braces. Each pair of these links 35—36 are held together, at their inner ends, by means of a pin 38 which is inserted through corresponding openings which are formed therein.

Threaded into the column 27 is an externally threaded tubular section 39, and a corresponding, but smaller, tubular section 40 is threaded into this tubular section 39, and mounted on this tubular section 40, at the upper end thereof, are cross arms 41 which are identical to the cross arms 23—24.

Mounted in the lowermost tubular section 27 are combination steps and hand grips 42 and additional combination steps and hand grips 43 may be mounted in the tubular sections 39 and 40, in any suitable manner, as by being removably inserted into suitable openings which are formed in the same.

In the use of the modified form of the lifting and supporting device which is shown in Fig. 3, the braces 30—31 and links 35—36 may be adjusted to the desired position, whereupon the tubular sections 39 and 40 may be adjusted to the desired height by rotating the same in and relative to their complementary sections. Otherwise, the use of the modified form of lifting device which is shown in Fig. 3 is the same as has been described hereinbefore in connection with the form of the lifting device which is shown in Figs. 1 and 2.

Another modified form of adjustable lifting and supporting device, for use in conjunction with the new scaffold, is shown in Figs. 4 and 5, is therein generally indicated at 44, and comprises a vertical column or standard which has the form of a tubular section 45, and mounted on this tubular section 45 is a collar 46 to which are attached supporting braces or legs 47 which are arranged in the form of a tripod and are interconnected by cross links 48. Slidably mounted in the lower tubular section 45 is a substantially cylindrical member 50 which is provided with a row of teeth, that is, a rack 51, and engaging with this rack 51 is a pinion 52 which is rotatably mounted in a bracket 53, this bracket 53 being attached to the upper end portion of the tubular section 45, and the pinion 52 being operated by a crank 54. Pivotally mounted in the bracket 53, as at 55, (Fig. 4) is a latch dog 56 and this latch dog 56 is engageable with the pinion 52 so as to latch the same and the crank 51 against retrograde movement.

In the use of the modified form of lifting device which is shown in Figs. 4 and 5 the upper sections 50 may be raised and lowered, relative to the lower sections 45, so as to raise or lower the platform, such as is shown in Fig. 1, by merely rotating the cranks 54, thereby causing the pinions 52 to engage with the racks 51, and the upper sections 50 may be held in their desired adjusted position by engaging the latch dogs 56 with the pinions 52.

A modified form of the new adjustable scaffold is shown in Fig. 6, is therein generally indicated at 57, and comprises a pair of adjustable lifting and supporting devices 58 which are identical in construction and in operation to the lifting devices 11 which are shown in Figs. 1 and 2, and hence need not be described in detail here, except that each of the devices 58 is provided with only one pair of cross arms 59 for the reception of the corresponding end portion of the planking or platform 60.

It will be noted that this form of the new adjustable scaffold, which is shown in Fig. 6, is particularly adapted for use by painters, paperhangers, and other workmen, in small rooms, apartments, and the like where a scaffold having a single plank platform is desired.

While three of the lifting and supporting devices 11 are shown as being embodied in the form of the new scaffold which is shown in Fig. 1, it is understood that this number may be varied and that additional devices 11 may be used, if desired, for the purpose of supporting the scaffold planks or platform, and that three or more of the devices 58 may, if desired, be used for supporting the platform shown in the modified form of the device which is illustrated in Fig. 6.

While I have illustrated and described the preferred form of construction for carrying my invention into effect, this is capable of variation and modification, without departing from the spirit of the invention. I, therefore, do not wish to be limited to the precise details of construction set forth, but desire to avail myself of such variations and modifications as come within the scope of the appended claims.

Having thus described my invention, what I claim as new and desire to protect by Letters Patent is:

1. A scaffold comprising, in combination, a platform consisting of a plurality of planks, and a plurality of devices for lifting and supporting the said platform, each of said devices including a vertically adjustable member, each of said adjustable members having a pair of cross arms thereon for supporting end portions of said planks, one of the said cross arms on each of said members being arranged above the other one of said cross arms so that each pair of the said cross arms will support, in superimposed relationship, the rightangularly intersecting end portions of platform or scaffold planks carried thereby and each of said devices including means for raising and lowering the corresponding one of said adjustable members and the said cross arms thereon.

2. A scaffold comprising, in combination, a substantially rectangular platform consisting of a

plurality of planks, a device arranged at each corner of the said platform for lifting and supporting the latter, each of said supporting devices including a vertically adjustable member, each of said adjustable members having a pair of cross arms thereon for supporting end portions of said planks, one of the said cross arms on each of said members being arranged above the other one of said cross arms so that each pair of the said cross arms will support, in superimposed relationship, the rightangularly intersecting end portions of platform or scaffold planks carried thereby and each of said devices including means for raising and lowering the corresponding one of said adjustable members.

3. A scaffold comprising, in combination, a platform consisting of a plurality of planks, and a plurality of devices for lifting and supporting the said platform, each of said devices including a vertically adjustable member, each of said adjustable members having two pairs of cross arms thereon for supporting end portions of said planks, one of the said cross arms on each of said members being arranged above the other one of said cross arms so that each pair of the said cross arms will support, in superimposed relationship, the rightangularly intersecting end portions of platform or scaffold planks carried thereby and each of said devices including means for raising and lowering the said adjustable members and the said cross arms thereon.

4. A scaffold comprising, in combination, a substantially rectangular platform consisting of a plurality of planks, a device arranged at each corner of the said platform, and below the latter, for supporting the same, each of said supporting devices including a vertically adjustable member, each of said adjustable members having two pairs of cross arms thereon for supporting end portions of said planks, one of the said cross arms on each of said members being arranged above the other one of said cross arms so that each pair of the said cross arms will support, in superimposed relationship, the rightangularly intersecting end portions of platform or scaffold planks carried thereby and each of said devices including means for raising and lowering the corresponding one of said adjustable members.

5. A device for supporting a plank scaffold or the like comprising a base and a member adjustably mounted thereon for vertical movement relative thereto, said adjustable member having a pair of cross arms thereon at the upper end thereof for supporting an end portion of a scaffold plank, one of the said cross arms on each of said members being arranged above the other one of said cross arms so that each pair of the said cross arms will support, in superimposed relationship, the rightangularly intersecting end portions of platform or scaffold planks carried thereby and means for raising and lowering the said adjustable member and the said cross arms thereon.

6. A device for supporting a plank scaffold or the like comprising a base and a member adjustably mounted thereon for vertical movement relative thereto, said adjustable member having two pairs of cross arms thereon at the upper end thereof for supporting end portions of oppositely extending scaffold planks, one of the said cross arms on each of said members being arranged above the other one of said cross arms so that each pair of the said cross arms will support, in superimposed relationship, the rightangularly intersecting end portions of platform or scaffold planks carried thereby, and means for raising and lowering the said adjustable member and the said cross arms thereon.

7. A device for supporting a plank scaffold or the like comprising a base and a member adjustably mounted thereon for vertical movement relative thereto, said adjustable member having a pair of cross arms thereon at the upper end thereof for supporting the end portion of a scaffold plank, one of the said cross arms on each of said members being arranged above the other one of said cross arms so that each pair of the said cross arms will support, in superimposed relationship, the rightangularly intersecting end portions of platform or scaffold planks carried thereby and means for raising and lowering the said adjustable member and the said cross arms thereon, said means including a worm gear mechanism, and a hand crank for operating the latter.

8. A device for supporting a plank scaffold or the like comprising a base and a member adjustably mounted thereon for vertical movement relative thereto, said adjustable member having a pair of cross arms thereon at the upper end thereof for supporting end portions of oppositely extending scaffold planks, one of the said cross arms on each of said members being arranged above the other one of said cross arms so that each pair of the said cross arms will support, in superimposed relationship, the rightangularly intersecting end portions of platform or scaffold planks carried thereby and means for raising and lowering the said adjustable member and the said cross arms thereon, said means including a worm gear mechanism, and a hand crank for operating the latter.

HARRY CASTADY.