Jan. 28, 1941. J. E. COLLINS 2,230,180

DEVICE FOR RECLAIMING OIL

Filed Aug. 21, 1939

Fig. 1.

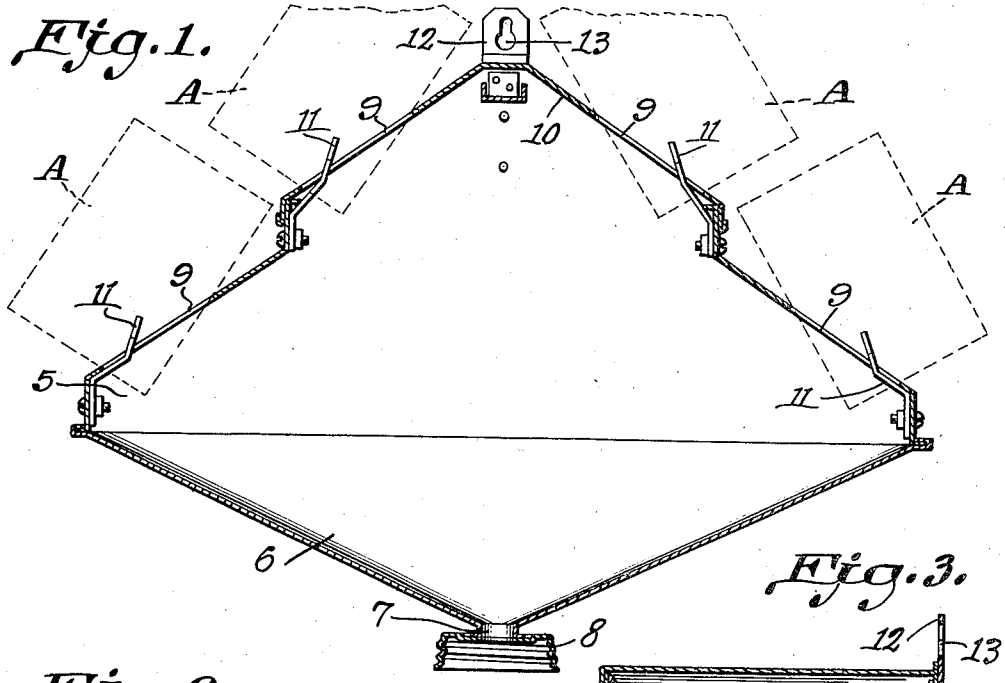

Fig. 3.

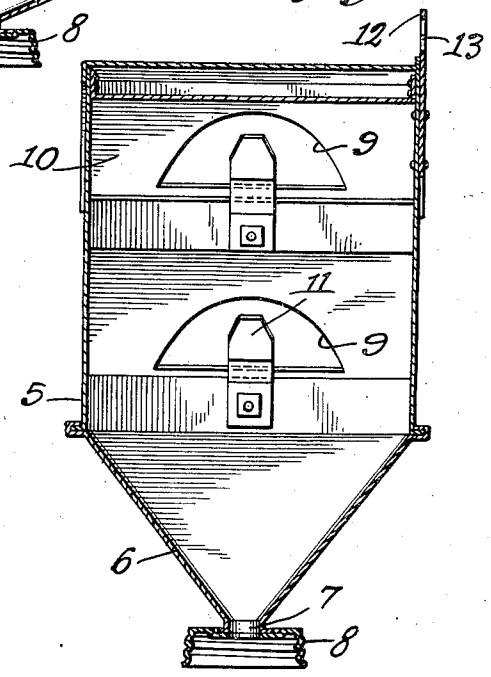

Fig. 2.

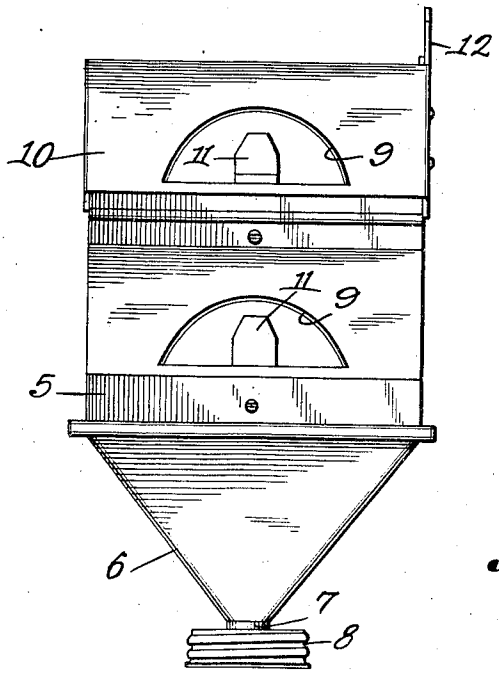

J. E. Collins INVENTOR.

BY Albert Lee.

ATTORNEYS.

Patented Jan. 28, 1941 2,230,180

UNITED STATES PATENT OFFICE

2,230,180

DEVICE FOR RECLAIMING OIL

James Edward Collins, Little Rock, Ark.

Application August 21, 1939, Serial No. 291,239

1 Claim. (Cl. 221—69)

This invention relates to a device designed for use in reclaiming the drippings of oil cans frequently employed in packaging lubricating oils, and from which the oil is poured into the crank cases of motor vehicles.

An important object of the invention is to provide a rack having means to support the cans from which the oil is being reclaimed, in an inclined position, so that the oil which ordinarily adheres to the walls of the cans, may readily drain therefrom and be directed to a container connected with the rack.

A further object of the invention is to provide a rack of this character which will be completely enclosed, so that the oil which is being reclaimed, will be maintained free of foreign matter.

A still further object of the invention is to provide a rack wherein the can supporting means is so arranged that various sized cans may be supported on the device.

With the foregoing and other objects in view, which will appear as the description proceeds, the invention resides in the combination and arrangement of parts and in the details of construction hereinafter described and claimed, it being understood that changes in the precise embodiment of the invention herein described, may be made within the scope of what is claimed, without departing from the spirit of the invention.

Referring to the drawing:

Figure 1 is a vertical sectional view through a device constructed in accordance with the invention.

Figure 2 is an end elevational view.

Figure 3 is a vertical sectional view through the device, taken at right angles to Figure 1.

Referring to the drawing in detail, the device comprises a body portion indicated generally by the reference character 5, and as shown, the body portion includes a funnel-shaped bottom 6, the outlet pipe 7 thereof being supplied with a screw cap 8 so that the usual threaded opening of a jar or container, may be positioned in the screw cap, supporting the jar to receive material from the outlet pipe.

The sides of the body portion are inclined, as clearly shown by Figure 1 of the drawing, the surfaces thereof being formed with curved cut-out portions 9 of sizes to accommodate portions of the ends of the cans supported by the rack, the cans in the present showing being indicated by the reference character A.

The cover which is indicated by the reference character 10 is removable, and formed with inclined portions forming continuations of the sides of the body portion, the inclined portions being provided with cut-out portions for the reception of the cans supported by the cover section.

Fingers indicated at 11 are secured to the sides of the body portion and are so arranged that they extend upwardly through the cut-out portions of the sides, so that they will extend into the usual discharge openings formed in the ends of the cans by the usual piercing implement employed in opening this type of can to pour the contents therefrom. While these fingers prevent clogging of the discharge openings of the cans, they at the same time afford means to prevent lateral movement of the cans which are being supported by the trough.

Extending upwardly from the body portion at the rear thereof, is a plate 12 which is formed with an elongated opening 13 so that the body portion may be hung on the wall.

In the use of the device, the usual oil can employed in packaging lubricating oils, and which is punctured by the well known removable spout used in pouring the oil from the can, is positioned with one end thereof extended into a cut-out portion of the device, the finger adjacent to the cut-out portion, extending into the opening which has been formed by piercing the discharge end of the can.

It will be obvious that the cans thus supported are held in inclined positions with the result that the oil which usually adheres to the walls of the cans, after the bulk of the oil has been poured therefrom, will drain from the cans into the trough 6, and pass through the discharge or outlet pipe 7 into the jar or receptacle supported by the screw cap 8.

What is claimed is:

A device for draining oil from oil cans, comprising a tank having inclined side walls and having a funnel-shaped bottom, the side walls of said tank having cut-out portions, fingers secured within the body portion and extending upwardly through the cut-out portions in the side walls, the cut-out portions in the side walls being arcuate-shaped to receive one end of an oil can, said fingers adapted to extend into the discharge openings of oil cans, securing the cans in position on the inclined side walls of the tank, and means for securing the tank on a receiving receptacle.

JAMES EDWARD COLLINS.