(12) INTERNATIONAL APPLICATION PUBLISHED UNDER THE PATENT COOPERATION TREATY (PCT)

(19) World Intellectual Property Organization
International Bureau

(43) International Publication Date
13 January 2011 (13.01.2011)

PCT

(10) International Publication Number
WO 2011/005629 A1

(51) International Patent Classification:
B23B 5/16 (2006.01) *F15B 15/20* (2006.01)

(21) International Application Number:
PCT/US2010/040572

(22) International Filing Date:
30 June 2010 (30.06.2010)

(25) Filing Language: English

(26) Publication Language: English

(30) Priority Data:
10 2009 032 296.5 9 July 2009 (09.07.2009) DE

(71) Applicant *(for all designated States except US)*: **ILLINOIS TOOL WORKS INC.** [US/US]; 3600 West Lake Avenue, Glenview, Illinois 60026 (US).

(72) Inventor; and

(75) Inventor/Applicant *(for US only)*: **FRICK, Ulrich** [DE/DE]; Sulzstrasse 1B, D-78224 Singen-Beuren (DE).

(74) Agent: **HAUPTMAN, Benjamin J.**; LOWE HAUPTMAN HAM & BERNER, LLP, 1700 Diagonal Road, Suite 300, Alexandria, Virginia 22314 (US).

(81) Designated States *(unless otherwise indicated, for every kind of national protection available)*: AE, AG, AL, AM, AO, AT, AU, AZ, BA, BB, BG, BH, BR, BW, BY, BZ, CA, CH, CL, CN, CO, CR, CU, CZ, DK, DM, DO, DZ, EC, EE, EG, ES, FI, GB, GD, GE, GH, GM, GT, HN, HR, HU, ID, IL, IN, IS, JP, KE, KG, KM, KN, KP, KR, KZ, LA, LC, LK, LR, LS, LT, LU, LY, MA, MD, ME, MG, MK, MN, MW, MX, MY, MZ, NA, NG, NI, NO, NZ, OM, PE, PG, PH, PL, PT, RO, RS, RU, SC, SD, SE, SG, SK, SL, SM, ST, SV, SY, TH, TJ, TM, TN, TR, TT, TZ, UA, UG, US, UZ, VC, VN, ZA, ZM, ZW.

(84) Designated States *(unless otherwise indicated, for every kind of regional protection available)*: ARIPO (BW, GH, GM, KE, LR, LS, MW, MZ, NA, SD, SL, SZ, TZ, UG, ZM, ZW), Eurasian (AM, AZ, BY, KG, KZ, MD, RU, TJ, TM), European (AL, AT, BE, BG, CH, CY, CZ, DE, DK, EE, ES, FI, FR, GB, GR, HR, HU, IE, IS, IT, LT, LU, LV, MC, MK, MT, NL, NO, PL, PT, RO, SE, SI, SK, SM, TR), OAPI (BF, BJ, CF, CG, CI, CM, GA, GN, GQ, GW, ML, MR, NE, SN, TD, TG).

Declarations under Rule 4.17:

— *as to applicant's entitlement to apply for and be granted a patent (Rule 4.17(ii))*

— *of inventorship (Rule 4.17(iv))*

Published:

— *with international search report (Art. 21(3))*

(54) **Title**: PNEUMATIC ACTUATING DEVICE AND PIPE MACHINING APPARATUS HAVING A PNEUMATIC ACTUATING DEVICE

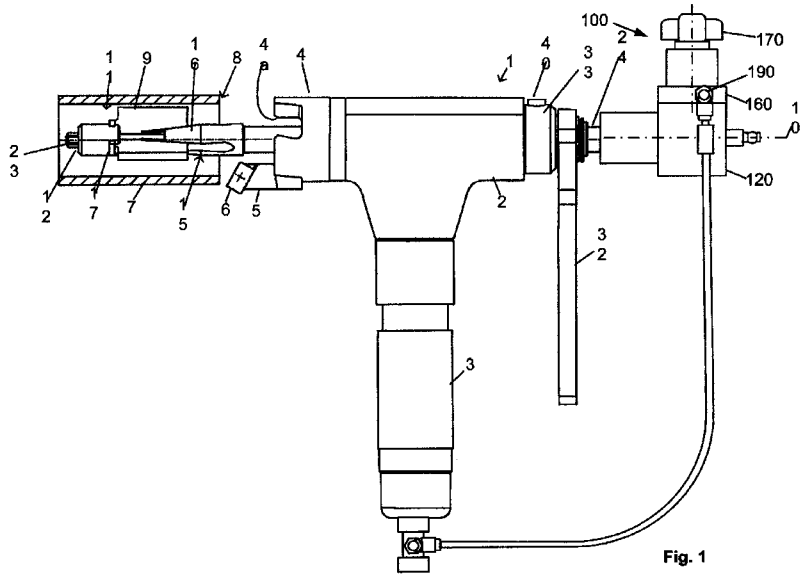

Fig. 1

(57) **Abstract**: The invention relates to a pneumatic actuating device (100) for an internal clamping device (8) of an apparatus (1) for machining a tubular body (7). The actuating device (100) has a cylinder (110), a piston (130) which is accommodated in the interior of the cylinder (110) in such a way that it divides the cylinder interior space into two cylinder regions (113, 114), a push rod (140) and a valve body (150). A single fluid connector (190) is provided on the actuating device (100) in order to feed the pressurized fluid to the valve, and a valve plate (160) is provided which is connected to the valve body (150) and is designed for producing a fluid connection between the fluid connector (190) and the separate cylinder regions (113, 114).

WO 2011/005629 A1

PNEUMATIC ACTUATING DEVICE AND PIPE MACHINING APPARATUS HAVING A PNEUMATIC ACTUATING DEVICE

The present invention relates to a pneumatic actuating device for an internal clamping device, in particular for apparatuses for machining a tubular body. The invention also relates to a pipe machining apparatus having a pneumatic actuating device.

US 5,531,550 A discloses a pipe-end machining apparatus which likewise has an internal clamping device. The internal clamping device in turn comprises three clamping wedges which are guided radially in a radial guide body arranged on an actuating rod. The actuating rod including the radial guide body is movable relative to a mast in the direction of an axial longitudinal axis common to the mast and the actuating rod. The mast has three oblique surfaces which extend at an acute angle to the longitudinal axis and on which the clamping wedges can be moved in a sliding manner in the axial direction, such that, during an axial movement, the clamping wedges are at the same time also moved in the radial direction and therefore in the direction of an inner wall of a pipe to be clamped.

Pneumatic drives which have a cylinder with piston which, by admission of compressed air, pushes or pulls a piston rod out of the cylinder are known, for example, from Festo. Valves for activating such pneumatic drive units are likewise known.

The object of the present invention is to specify an

actuating device for an internal clamping device of a pipe machining apparatus, with which actuating device the clamping device can be quickly actuated and which can be attached to existing clamping devices in a simple manner and ensures the possible uses of the pipe machining apparatus due to a compact type of construction.

The actuating device according to the invention for an internal clamping device of a pipe machining apparatus has a cylinder with housing in which a piston is movable axially in the longitudinal direction and divides the interior space of the cylinder into two cylinder regions separate from one another. A push rod which runs parallel to the cylinder axis is connected to the piston. The push rod extends over the entire length of the cylinder and through passage openings in the two side faces of the cylinder. A valve body is connected in one piece with the housing of the cylinder or is produced as an individual element and can be connected to the cylinder of the housing. The valve body accommodates the valve. The valve has only one fluid connector in order to admit pressurized fluid to the valve. Passages are formed in a valve plate which is connected to the valve body. A fluid connection can be produced between the fluid connector and the separate cylinder regions by actuating an actuating element.

Further possible and advantageous features of the invention are specified in the dependent claims.

The invention is described below by way of example with reference to a possible embodiment and the attached drawings, in which:

Fig. 1 shows an embodiment of a pipe machining apparatus having a pneumatic actuating device for an internal clamping device in plan view, with a pipe to be clamped in sectional view;

Fig. 2 shows parts of the internal clamping device of the embodiment of the pipe machining apparatus shown in fig. 1;

Fig. 3 shows a section along axis A-A in fig. 2;

Fig. 4 shows a section along axis B-B in fig. 2;

Fig. 5 shows a section along axis C-C in fig. 2, but with clamping wedges being omitted from the illustration;

Fig. 6 shows a section along axis D-D in fig. 5;

Fig. 7 shows a mast of the internal clamping device according to fig. 2 in a perspective illustration;

Fig. 8 shows a plan view of parts of the internal clamping device according to fig. 2 in an axial longitudinal direction of the pipe machining apparatus;

Fig. 9 shows a sectional view of a detail from fig. 2 comprising a radial guide body and clamping wedges;

Fig. 10 shows a cross section of a feed device of the embodiment according to fig. 1;

Fig. 11 shows a perspective plan view of the entire pipe machining apparatus;

Fig. 12 shows a perspective view of an embodiment of a pneumatic actuating device according to the invention; and

Fig. 13 shows a vertical cross-sectional view along the cylinder axis 10 through the embodiment of the actuating device according to fig. 12.

The figures show a preferred embodiment of an actuating device 100 according to the invention for a pipe machining apparatus 1 having an internal clamping device 8. According to fig. 12, the actuating device 100 has a housing 120, having a cylinder 110 (which cannot be seen) and a piston 130 (which cannot be seen), and a valve plate 160 and an actuating element 170 for actuating the valve. A single fluid connector 190 for a pressurized fluid is arranged laterally on the valve plate.

The cylinder 110 inside the housing 120 can be seen in the vertical cross section in fig. 13 along the axis 10. The cylinder 110 is defined in the axial direction along the axis 10 by two side faces 111, 112. The cylinder housing 120 can be made in one piece or, as in the present embodiment, for simplified manufacture, in three parts, which respectively comprise a side face 111, a side face 112 and the cylinder 110.

The piston 130 is located inside the cylinder. The piston is movable axially in the direction of an axis 10. The piston 130 divides the interior space of the cylinder into two cylinder regions 113 and 114 which are separate from one another in a fluid-tight manner. The piston 130 can be made in one piece or in several pieces in order to arrange sealing elements 132 between the axially adjacent piston parts in order thus to provide for fluid-tight separation of the two cylinder regions 113 and 114. The sealing elements can be, for example, O-rings or piston rings. A push rod 140 is arranged parallel to the axis 10.

The push rod 140 extends through a passage opening 131 in the piston 130 and is fixedly connected to the latter, such that a force exerted on the piston in the direction of the axis 10 moves the push rod in the axial direction. The push rod 140 seals the passage opening 131 in the piston 130 in a fluid-tight manner. The push rod 140 extends in the direction of the axis 10 through the entire cylinder 110 and emerges from the cylinder 110 at the two side faces through passage openings. The passage openings are designed to be fluid-tight, for example through the use of O-rings or shaft seals. The push rod 140 has an axial bore 142.

Fig. 1 shows the actuating device 100 on the pipe machining apparatus having the internal clamping device 8.

The axial bore 142 of the push rod 140 is designed for accommodating an actuating rod 22 of the internal clamping device of the pipe machining apparatus 1, such

that the actuating rod 22, when the actuating device 100 is mounted on the pipe machining apparatus 1, extends through the axial bore 142 of the push rod 140 and emerges at that end of the push rod 140 which faces away from the pipe machining apparatus 1. The ends of the push rod 140 and of the actuating rod 22 facing away from the pipe machining apparatus 1 are connected to one another, such that the push rod can exert both a pulling force and an opposed pushing force on the actuating rod 22 along the axis 10. The connection can be made, for example, by a split pin, a clamping device or a screwed connection or the like. The actuating device 100 therefore does not require a longer type of construction of the pipe machining apparatus 1 and does not project beyond the latter along the axis 10.

On the side facing the pipe machining apparatus 1, the cylinder housing 120 is connected to a mast 24 of the internal clamping device 8, and so the position of the actuating device 100 relative to the mast 24 along the axis 10 is fixed. The connection can be made, for example, by a split pin, a clamping device or a screwed connection or the like. As a result, the actuating device 100 is designed for exerting a force on the actuating rod 22 along the axis 10 and for displacing said actuating rod 22 relative to the mast 24. Alternatively, the actuating device 100 can also be connected to other parts of the pipe machining apparatus 1 which are fixed relative to the mast 24 and are therefore suitable for absorbing the reaction force as a result of the force exerted on the actuating rod 22. It is therefore advantageously possible to retrofit the actuating device 100 to existing pipe machining apparatuses 1 having

manual actuation of the actuating rod, without design changes.

The valve plate 160 has passages 161 and 162 which are fluidically connected to passages 121 and 122 in the cylinder housing 120. When the actuating element 170 is actuated, the valve in the valve body 150 produces, through these passages 121, 161, a fluid connection between the single fluid connector 190 and the first cylinder region 113. Thus only one connecting line is advantageously required for feeding pressurized fluid.

The pressurized fluid flows into the cylinder region 113 and exerts an axial force on the piston 130 in the direction of axis 10. At the same time, the valve in the valve body 150 produces a fluid connection between the second cylinder region 114 and a fluid drain (not shown). For example, the fluid drain can be fluidically connected to the surrounding atmosphere, can open into a sound absorber or can open into a fluid reservoir of lower pressure. Due to the resulting pressure difference between the two cylinder regions 113 and 114, a resulting axial force acts on the piston 130 in the cylinder 120. The piston 130 transmits this force in turn to the push rod 140. The latter in turn transmits the force via the connected ends facing away from the pipe machining apparatus 1 to the actuating rod 22 and moves the latter out of the internal clamping device 8 along the axis 10 away from the apparatus 1.

The valve in the valve body 150, when the actuating element 170 is actuated differently, for example rotated in the other, opposite direction, is designed for

producing a fluid connection between the single fluid connector 190 and the second cylinder region 114 via the passages 122, 162. The pressurized fluid flows into the cylinder region 114 and exerts an axial pressure on the piston 130 in the direction of axis 10. At the same time, the valve in the valve body 150 produces a fluid connection between the first cylinder region 113 and a fluid drain (not shown). For example, the fluid drain can be fluidically connected to the surrounding atmosphere, can open into a sound absorber or can open into a fluid reservoir of lower pressure. Due to the resulting pressure difference between the two cylinder regions 113 and 114, a resulting axial force acts on the piston 130 in the cylinder 120. The piston 130 transmits this force in turn to the push rod 140. The latter in turn transmits the force via the connected ends facing away from the pipe machining apparatus 1 to the actuating rod 22 and moves the latter along the axis 10 toward the apparatus 1 and into the internal clamping device 8.

Arranged or accommodated on the tool-holding device 4 is a tool carrier 5 which carries a tool in the form of a cutting tip (reversible tip) 6. In the preferred embodiment, the cutting tip 6 serves to bevel that end of a pipe 7 which faces the pipe machining apparatus 1 or the tool carrier 5 (to provide said end with a chamfer) and therefore to prepare said end for a welding process. Alternatively or additionally, the use of other tools for machining pipe ends (grinding tools or tools for deburring or for facing), but in particular the use of tools for machining the pipe on its inner side and/or outer side (for example a threading tool for cutting threads on the outer side and/or inner side of the pipe

or a turning tool for turning the outer side and/or the inner side of the pipe), is also conceivable. In addition to the tool carrier holder which holds the tool carrier 5 as shown in fig. 1, two further tool carrier holders 4a are arranged on the tool-holding device 4 in order to hold a second and a third tool carrier, which can hold either the same tools or else other tools for carrying out a plurality of operations. The tool-holding device 4 together with the tool carrier 5 and the cutting tip 6 is arranged concentrically to an axial longitudinal axis 10 of the pipe machining apparatus 1 and so as to be rotatable about this longitudinal axis 10.

To reliably fix the pipe 7 before or during planned machining, the pipe machining apparatus 1 according to the invention has an internal clamping device 8 having three clamping wedges 9 which can be inserted into the pipe 7. Each of the three clamping wedges 9 consists of a metal plate, the plane of which in each case extends radially and axially relative to the longitudinal axis 10.

The clamping wedges 9 are radially guided by radial guide surfaces 13a of a radial guide body 12 and are obliquely guided by oblique guide surfaces 14a, extending at an acute angle to the longitudinal axis, of an oblique guide body 16, wherein the radial guide body 12 is movable axially with respect to the longitudinal axis 10 relative to the oblique guide body 16, such that the clamping wedges 9, remaining parallel to one another, are moved in the longitudinal direction and at the same time radially in the process.

Both the radial guide 11 and the oblique guide 15 have guide grooves 19, 20, undercut in the preferred embodiment, and guide heads 17, 18 corresponding thereto.

In the preferred embodiment described here, the radial guide body 12 is of cylindrical design and has a through-hole 21 in its center. The radial guide body 12 is fastened to an actuating rod 22 arranged such as to be movable in the axial longitudinal direction, i.e. in the direction of the longitudinal axis 10. In the preferred embodiment, the fastening is effected by means of a fastening device in the form of a nut 23. For this purpose, the actuating rod 22 has a thread which is arranged on its end facing the pipe. Any other fastening or frictional arrangement, for example by means of a bolt or a split pin, or else by means of an interference fit, would of course also be conceivable.

At its end facing away from the tool-holding device 4, the through-hole 21 of the radial guide body 12 has a section 12a (extending along the longitudinal axis 10) having a noncircular cross-sectional shape (cf. in particular fig. 9). The actuating rod 22 has a section 22a corresponding thereto, which has a noncircular cross-section of matching size. As a result of this design, the radial guide body 12 is arranged on the actuating rod 22 in a rotationally fixed manner, i.e. the radial guide body 12 cannot rotate relative to the actuating rod 22. In the embodiment preferred, the noncircular cross section is a flattened section of the actuating rod 22 at the circumferential generating surface. The radial guide body 12 has a configuration corresponding thereto. Furthermore, the steps 12b, 22b which are formed on the

actuating rod 22 and correspondingly on the radial guide body 12 ensure that the radial guide body 12 is fixed in a stationary position on the actuating rod 22 in the longitudinal direction.

In the embodiment described, the oblique guide body 16 is formed integrally with a hollow mast 24. Alternatively, the oblique guide body 16 could also be arranged on the mast 24 as an independent element, in particular fastened thereto (for example by an external thread, which is formed on the mast 24 and corresponds to an internal thread formed on the oblique guide body 16, or else by adhesive bonding, brazing, welding or also by a headless set screw).

The mast 24, with respect to the axial longitudinal axis 10, is arranged such as to be movable relative to the tool-holding device 4 (and to the housing 2). The actuating rod 22 is arranged in the mast 24 such as to be movable or displaceable relative to the latter and likewise relative to the tool-holding device 4 along the longitudinal axis 10. Thus, the actuating rod 22 can be moved axially relative to the mast 24 and the mast 24 can be moved in the axial longitudinal direction relative to the tool-holding device 4 or relative to the tool carrier 5.

The relative mobility between mast 24 and actuating rod 22 ensures that the clamping wedges 9, which are guided radially in the radial guide body 12 fastened to the actuating rod 22, can be moved axially along the oblique guide surfaces 14a arranged on the mast 24 and to be assigned to the oblique guide body 16. The result of this

is that, during a movement of the actuating rod 22 relative to the mast 24 out of the pipe 7 along the axial longitudinal axis 10, the clamping wedges 9 are displaced radially outward and approach the inner wall of the pipe 7. During a relative movement in the opposite direction, the clamping wedges 9 move away from the inner wall of the pipe 7.

The pipe 7 is accordingly clamped or fixed before the planned machining by the actuating rod 22 being moved along the axial longitudinal axis 10 in a direction from the clamping wedges 9 toward the housing 2 (the mast 24 remains in a fixed position in the process) until the clamping wedges 9 bear against the inner side of the pipe 7 and hold the latter fixedly in its position. The actuating rod 22 is moved, as described above, by the actuating device 100.

Once the pipe 7 is fixed, the machining of the same (in the preferred embodiment machining of the pipe end using the cutting tip 6) can be started. In the process, the relative mobility between the tool-holding device 4 (including housing 2 and handle 3) and the mast 24 ensures that the tool-holding device 4 together with the tool carrier 5 and the cutting tip 6 can be moved relative to the pipe 7 along the axial longitudinal axis 10 and therefore feeding of the tool in the direction of the pipe 7 or into the pipe 7 and an opposite movement are possible. For the machining, the tool-holding device 4, by means of an electric motor (not shown) which is located in the housing 2 and is placed in the region of the handle 3, is set in motion relative to the pipe 7 and relative to the housing 2 via gearing (likewise not

shown), such that the tool-holding device 4 together with tool carrier 5 and cutting tip 6 is rotated about the axial longitudinal axis 10.

The requisite tool feed is achieved via a feed device 31 (cf. in this respect in particular fig. 10) which moves or feeds the housing 2 together with tool-holding device 4 with tool carrier 5 and cutting tip 6 along the axial longitudinal axis 10 toward the pipe 7. To this end, the feed device 31 comprises a feed handle in the form of a hexagon lever 32 and a feed cap sleeve 33 which is of hexagonal design on its side facing away from the tool-holding device 4 in order to accommodate the hexagon lever 32. Instead of a hexagon lever, any other feed handle which is in engagement with the feed cap sleeve 33 in a positive-locking and/or frictional manner is also conceivable. In the preferred embodiment, the hexagon lever 32 is designed as a ratchet lever, although a simple hexagon or ring wrench would also be conceivable for this purpose as an alternative.

The feed cap sleeve 33 has an internal thread 34 which is in engagement with a corresponding external thread 35 provided on the mast 24. In this case, the external thread on the mast 24 extends from a thread clearance groove 36 up to the end 37 of the mast 24 (cf. in this respect, e.g., fig. 7, where the thread clearance groove 36 can be seen; the thread itself cannot be seen from this figure). By a rotary movement (clockwise rotation) of the feed cap sleeve 33, the housing 2 together with the tool-holding device 4, the tool carrier 5 and the cutting tip 6 is fed along the mast 24 in the direction of the pipe 7. In order to ensure the rotatability of the

feed cap sleeve 33 relative to the housing 2, said feed cap sleeve 33 runs on balls 38 provided between the housing 2 and the feed cap sleeve 33 (in respective recesses provided for this purpose in the feed cap sleeve 33 and in the housing 2). In order to prevent rotation of the mast 24 in the housing, said mast 24 (cf. in this respect fig. 7) has a keyway 39 extending along the axial longitudinal axis 10. The rotary locking is achieved in this case by means of a headless set screw 40 which is in engagement with a feather key (not shown). As an alternative to the feed device 31 described above, all other feed devices, for example on a pneumatic, hydraulic or even electric-motor basis, are conceivable.

Finally, it can be seen from fig. 11, which shows a plan view of the above-described preferred embodiment along the axial longitudinal axis 10, that the tool-holding device 4 is fastened to the housing 2 by screws 42. Furthermore, holders 41 for the tool holding can be seen from fig. 11.

Although the invention is described with reference to an embodiment having a fixed combination of features, it nonetheless also comprises the conceivable further advantageous combinations as specified in particular, but not exhaustively, in the dependent claims. All the features disclosed in the application documents are claimed as essential to the invention insofar as they are novel over the prior art individually or in combination.

CLAIMS

1. A pneumatic actuating device (100) for an internal clamping device (8) of an apparatus (1) for machining a tubular body (7), wherein the actuating device (100) has the following:

- a cylinder (110) having a cylinder housing (120);
- a piston (130) which is movable axially along the cylinder axis and which is accommodated in the interior of the cylinder (110) in such a way that it divides the cylinder interior space into two cylinder regions (113, 114) separate from one another;
- a push rod (140) which runs axially through the cylinder (110) and the piston (130) and is connected to the piston (130), wherein the push rod extends through passage openings (115, 116) provided in both side faces of the cylinder (110); and
- a valve body (150) which is connected to or can be connected to the cylinder housing (120) and in which a valve is accommodated, through which pressurized fluid can be alternately admitted to the two cylinder regions (113, 114) by means of an actuating element (170),

characterized in that a single fluid connector (190) is provided on the actuating device (100) in order to feed the pressurized fluid to the valve, and in that a valve plate (160) is provided which is connected to the valve body (150) and is designed for producing a fluid connection between the fluid connector (190) and the separate cylinder regions (113, 114).

2. The actuating device (100) as claimed in claim 1, wherein the push rod (140) has an axial bore (142) extending over its entire length and intended for accommodating an actuating rod (22) of the internal clamping device (8).

3. The actuating device (100) as claimed in either of the preceding claims, wherein the valve is provided with an actuating element (170) for manual actuation in order to alternately admit pressurized fluid to the one or the other cylinder region (113, 114).

4. The actuating device (100) as claimed in one of the preceding claims, wherein the valve is designed in such a way that the cylinder region (113, 114) which is not pressurized is fluidically connected to the surrounding atmosphere.

5. An apparatus (1) for machining a tubular body, in particular an end region of a pipe, wherein the apparatus (1) has the following:

- a pneumatic actuating device (100) as claimed in one of claims 1 to 4, and
- an internal clamping device (8) which has an actuating rod (22),

wherein the actuating rod (22) extends through an axial bore (142), extending over the entire length, of the push rod (140) and is connected to the push rod (140) on the side facing away from the apparatus (1) for machining a tubular body.

6. The apparatus (1) as claimed in claim 5, wherein the cylinder housing (120) of the cylinder (110) is connected to the apparatus (1) for machining a tubular body on the side which faces said apparatus (1).

7. An apparatus (1) for machining a tubular body, in particular an end region of a pipe, wherein the apparatus (1) has the following:

- a tool-holding device which is intended for holding at least one tool (6) provided for pipe machining and which is arranged concentrically to an axial longitudinal axis (10) of the pipe machining apparatus (1) and so as to be rotatable about this longitudinal axis (10),
- an internal clamping device (8) which is designed to be suitable for inserting into a pipe (7) and comprises at least three clamping wedges (9), and
- a pneumatic actuating device (100) as claimed in one of claims 1 to 4, which is designed to move the actuating rod (22) in the axial longitudinal direction relative to the apparatus (1) for machining a tubular body,

wherein the clamping wedges (9) are radially guided by radial guide surfaces (13a) of a radial guide body (12) and are obliquely guided by oblique guide surfaces (14a), extending at an acute angle to the longitudinal axis (10), of an oblique guide body (16),

wherein the radial guide body (12) is movable axially with respect to the longitudinal axis (10) relative to the oblique guide body (16), such that the clamping wedges (9), remaining parallel to one another, are moved in the longitudinal direction and at the same time radially in the process, and

wherein the radial guide body (12) is fastened to an actuating rod (22) arranged such as to be movable in the axial longitudinal direction relative to the tool-holding device (4).

8. The apparatus (1) as claimed in claim 7, wherein the oblique guide body (16) is arranged on a hollow mast (24) or is formed by the hollow mast (24).

9. The apparatus (1) as claimed in claim 8, wherein the mast (24), with respect to the axial longitudinal axis (10), is arranged such as to be movable relative to the tool-holding device (4).

10. The apparatus (1) as claimed in either of claims 8 and 9, wherein the actuating rod (22) is arranged in the mast (24) such as to be displaceable relative to the latter in the direction of the axial longitudinal axis (10).

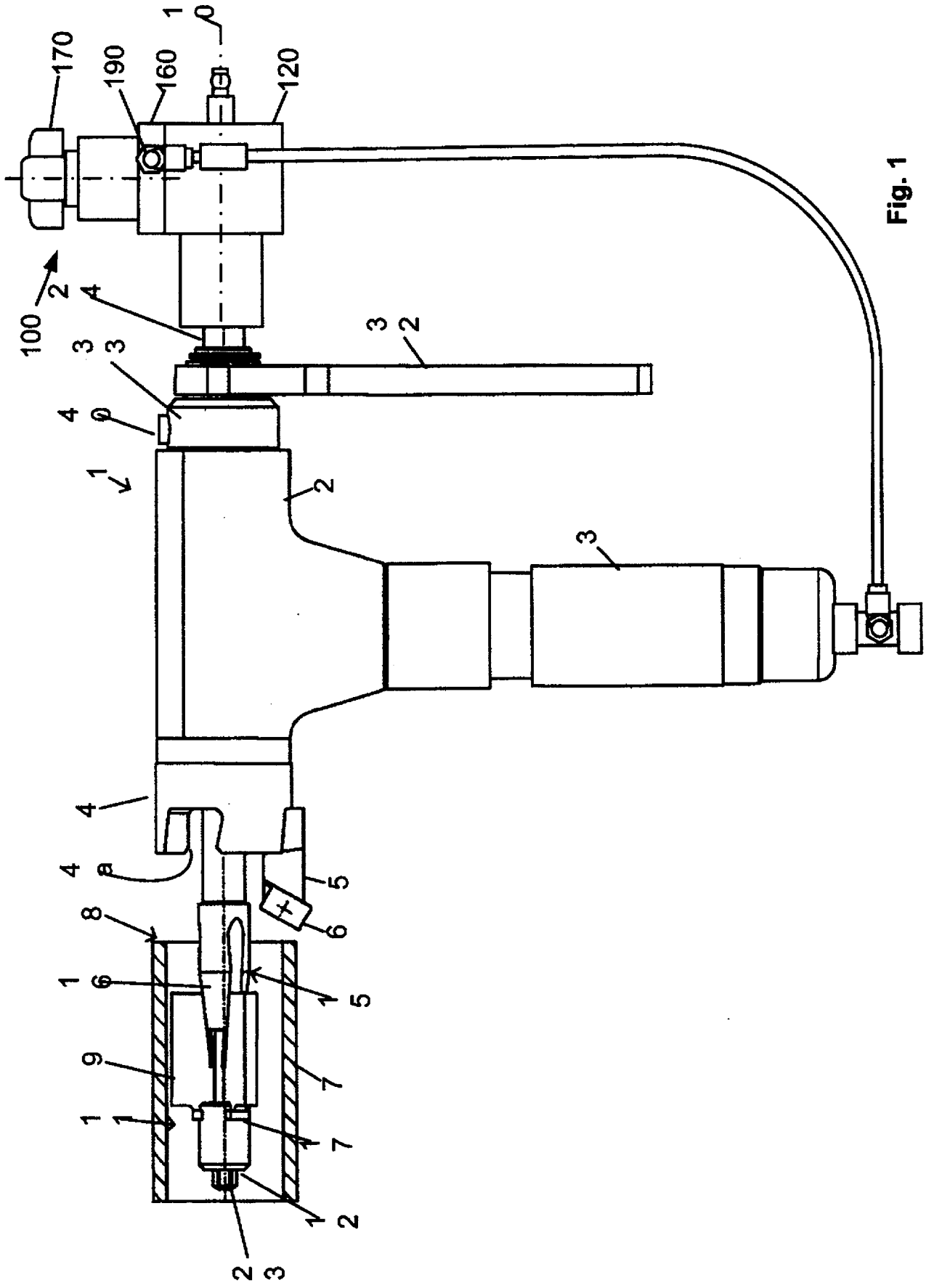

Fig. 1

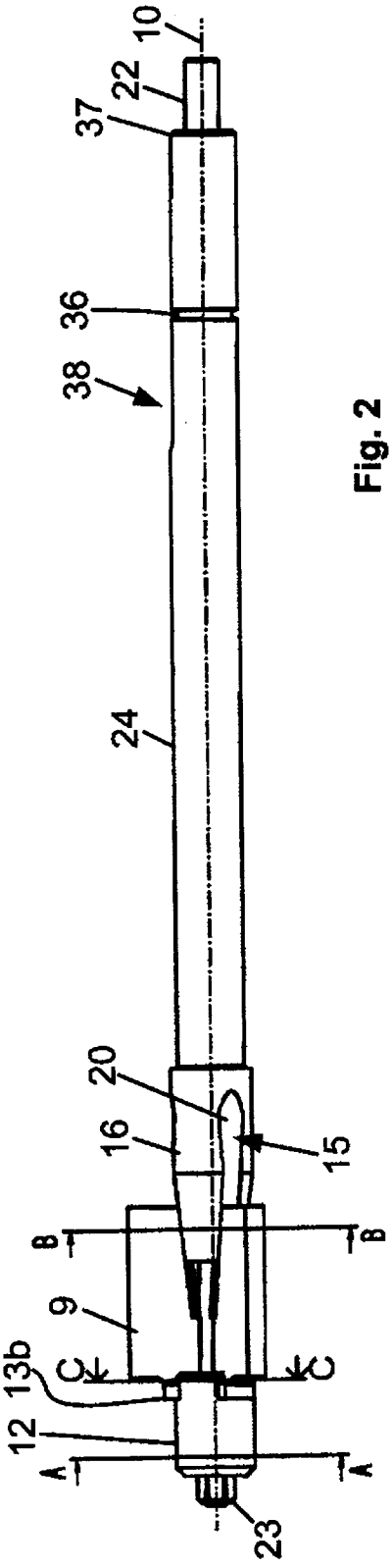

Fig. 2

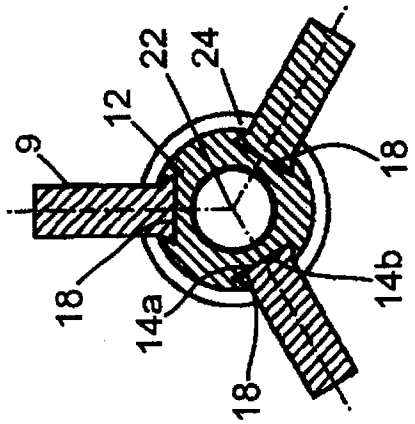

Fig. 4

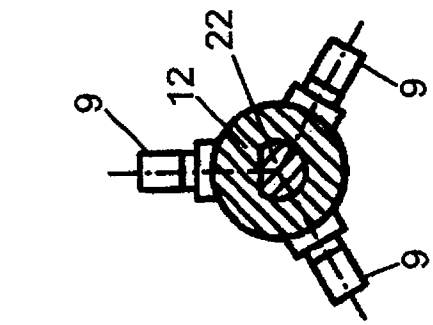

Fig. 3

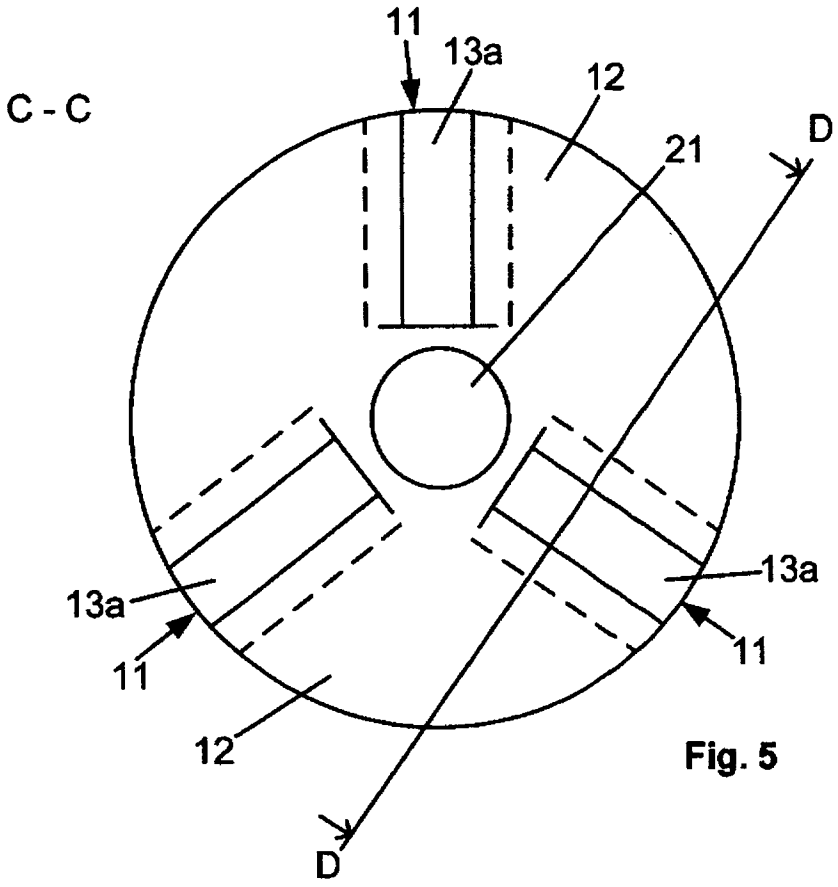

Fig. 5

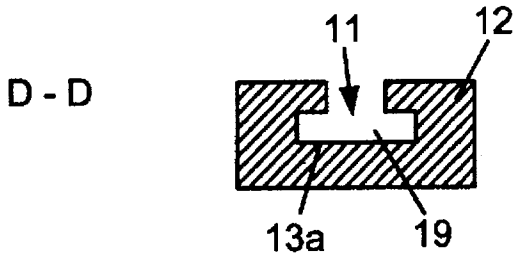

Fig. 6

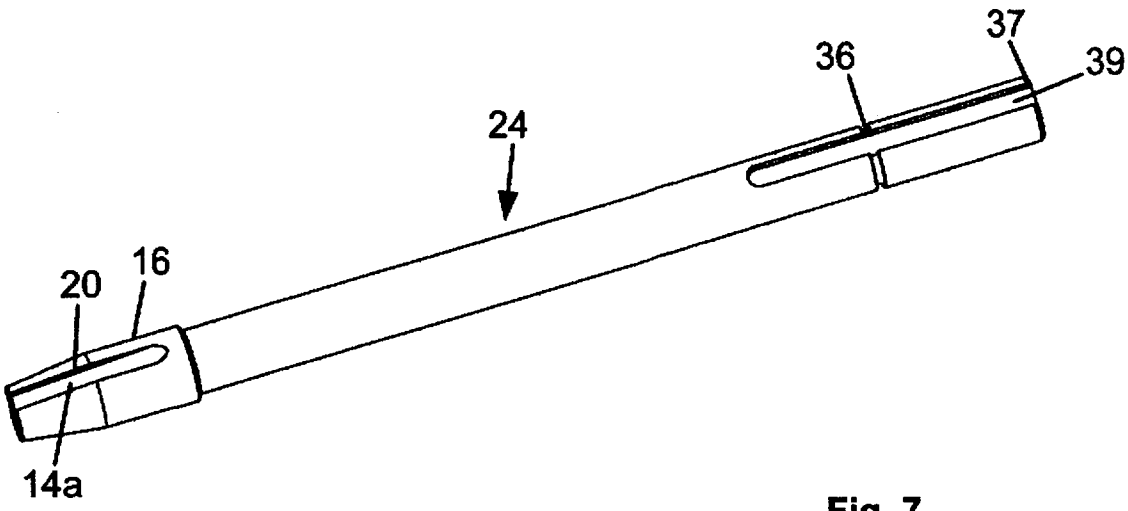

Fig. 7

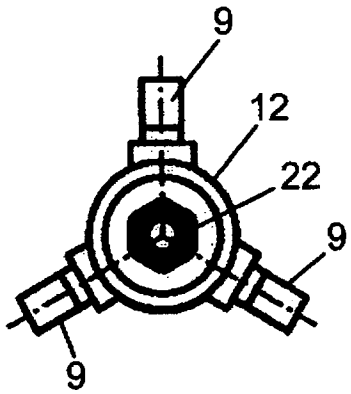

Fig. 8

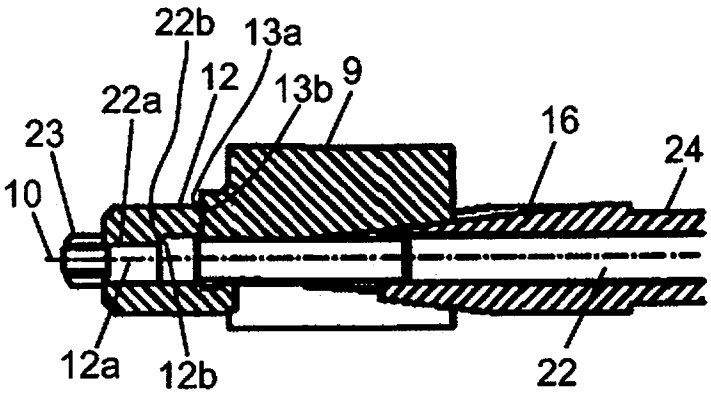

Fig. 9

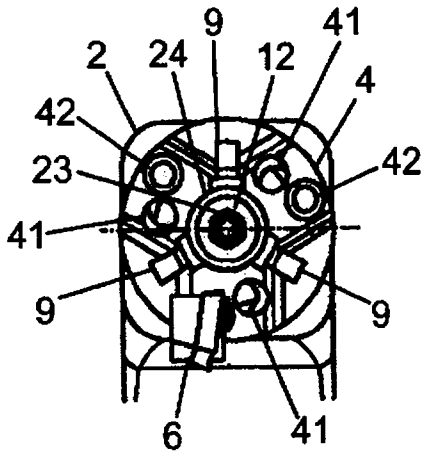

Fig. 11

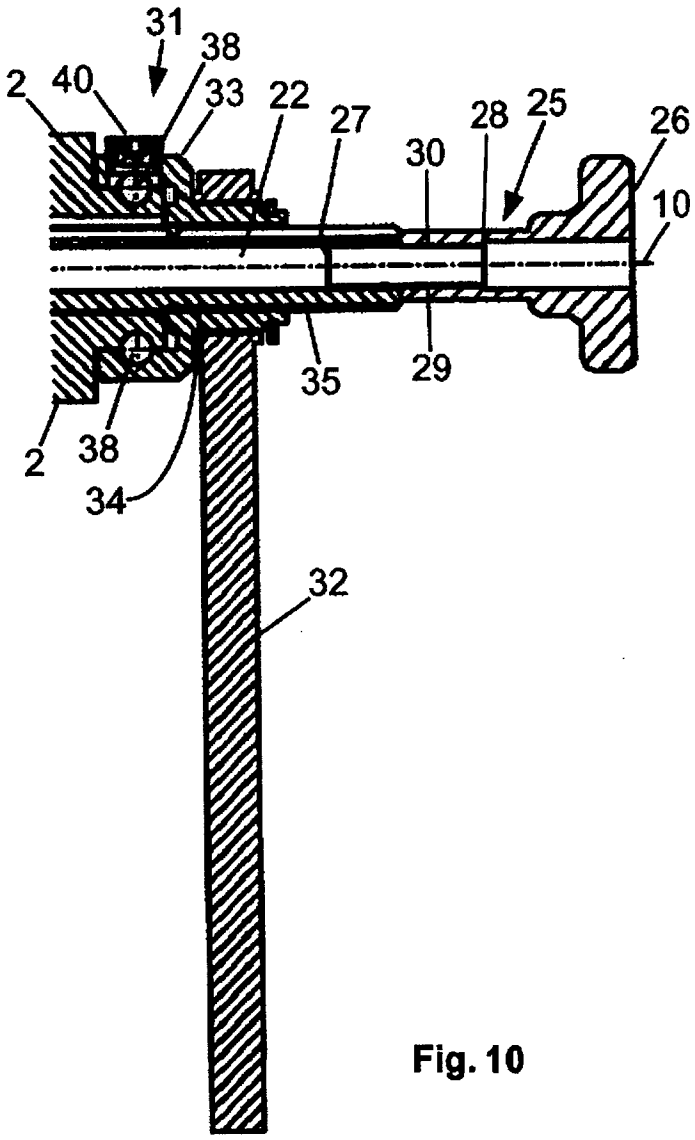

Fig. 10

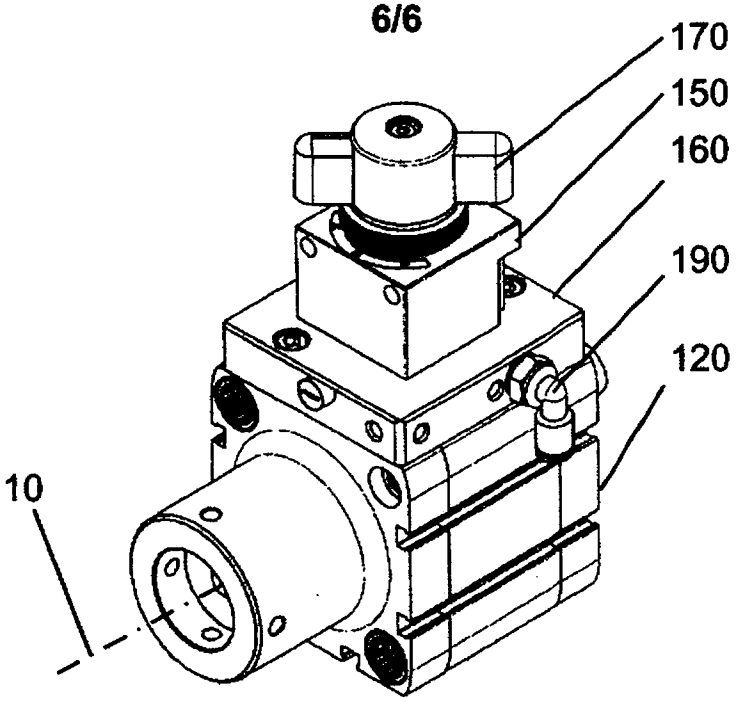
170
150
160
190
120
10

Fig. 12

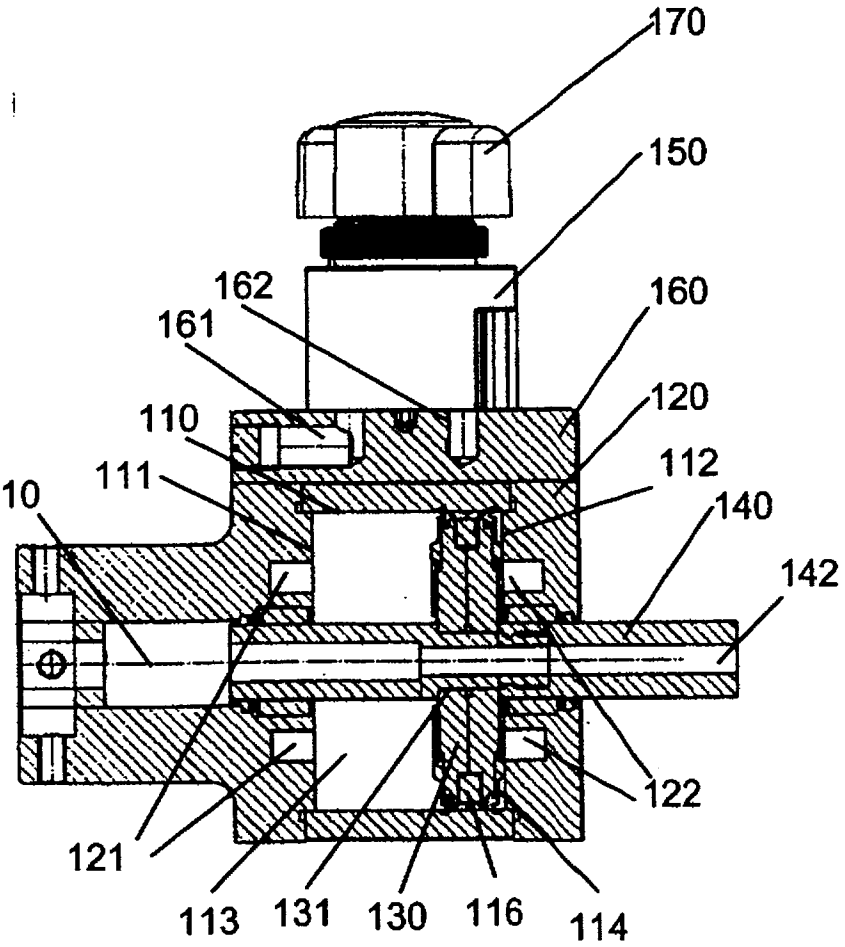
170
150
162
161
160
110
120
111
112
10
140
142
122
121
113
131
130
116
114

Fig. 13

INTERNATIONAL SEARCH REPORT

International application No
PCT/US2010/040572

A. CLASSIFICATION OF SUBJECT MATTER
INV. B23B5/16 F15B15/20
ADD.

According to International Patent Classification (IPC) or to both national classification and IPC

B. FIELDS SEARCHED

Minimum documentation searched (classification system followed by classification symbols)
F15B B23B

Documentation searched other than minimum documentation to the extent that such documents are included in the fields searched

Electronic data base consulted during the international search (name of data base and, where practical, search terms used)
EPO-Internal, WPI Data

C. DOCUMENTS CONSIDERED TO BE RELEVANT

Category*	Citation of document, with indication, where appropriate, of the relevant passages	Relevant to claim No.
X Y	US 4 987 822 A (STOLL KURT [DE]) 29 January 1991 (1991-01-29) column 1, lines 5-13 column 3, line 44 - column 8, line 2; figure 3	1 2-4,7-10
Y	US 3 158 068 A (BOKELMAN MARINUS C) 24 November 1964 (1964-11-24) column 2, lines 4-18 figures 1,2,4	2
Y	US 3 330 366 A (LOWRY ROBERT D ET AL) 11 July 1967 (1967-07-11) column 2, line 29 - column 3, line 34; figures 1-12	3,4,7-10
A	US 2009/007771 A1 (MATSUMOTO TAKUMI [JP]) 8 January 2009 (2009-01-08) the whole document	1

☐ Further documents are listed in the continuation of Box C.

☒ See patent family annex.

* Special categories of cited documents :

"A" document defining the general state of the art which is not considered to be of particular relevance

"E" earlier document but published on or after the international filing date

"L" document which may throw doubts on priority claim(s) or which is cited to establish the publication date of another citation or other special reason (as specified)

"O" document referring to an oral disclosure, use, exhibition or other means

"P" document published prior to the international filing date but later than the priority date claimed

"T" later document published after the international filing date or priority date and not in conflict with the application but cited to understand the principle or theory underlying the invention

"X" document of particular relevance; the claimed invention cannot be considered novel or cannot be considered to involve an inventive step when the document is taken alone

"Y" document of particular relevance; the claimed invention cannot be considered to involve an inventive step when the document is combined with one or more other such documents, such combination being obvious to a person skilled in the art.

"&" document member of the same patent family

Date of the actual completion of the international search	Date of mailing of the international search report
23 August 2010	30/08/2010

Name and mailing address of the ISA/	Authorized officer
European Patent Office, P.B. 5818 Patentlaan 2 NL - 2280 HV Rijswijk Tel. (+31-70) 340-2040, Fax: (+31-70) 340-3016	Lorence, Xavier

INTERNATIONAL SEARCH REPORT

Information on patent family members

International application No
PCT/US2010/040572

Patent document cited in search report	Publication date	Patent family member(s)	Publication date
US 4987822 A	29-01-1991	DE 3870876 D1	11-06-1992
		EP 0355179 A1	28-02-1990
		ES 2030811 T3	16-11-1992
		JP 2066304 A	06-03-1990
		JP 2928276 B2	03-08-1999
US 3158068 A	24-11-1964	NONE	
US 3330366 A	11-07-1967	NONE	
US 2009007771 A1	08-01-2009	JP 2009014069 A	22-01-2009