2 Sheets—Sheet 1.

J. GRZYBOWSKI.

FIRE-ENGINE.

No. 193,603. Patented July 31, 1877.

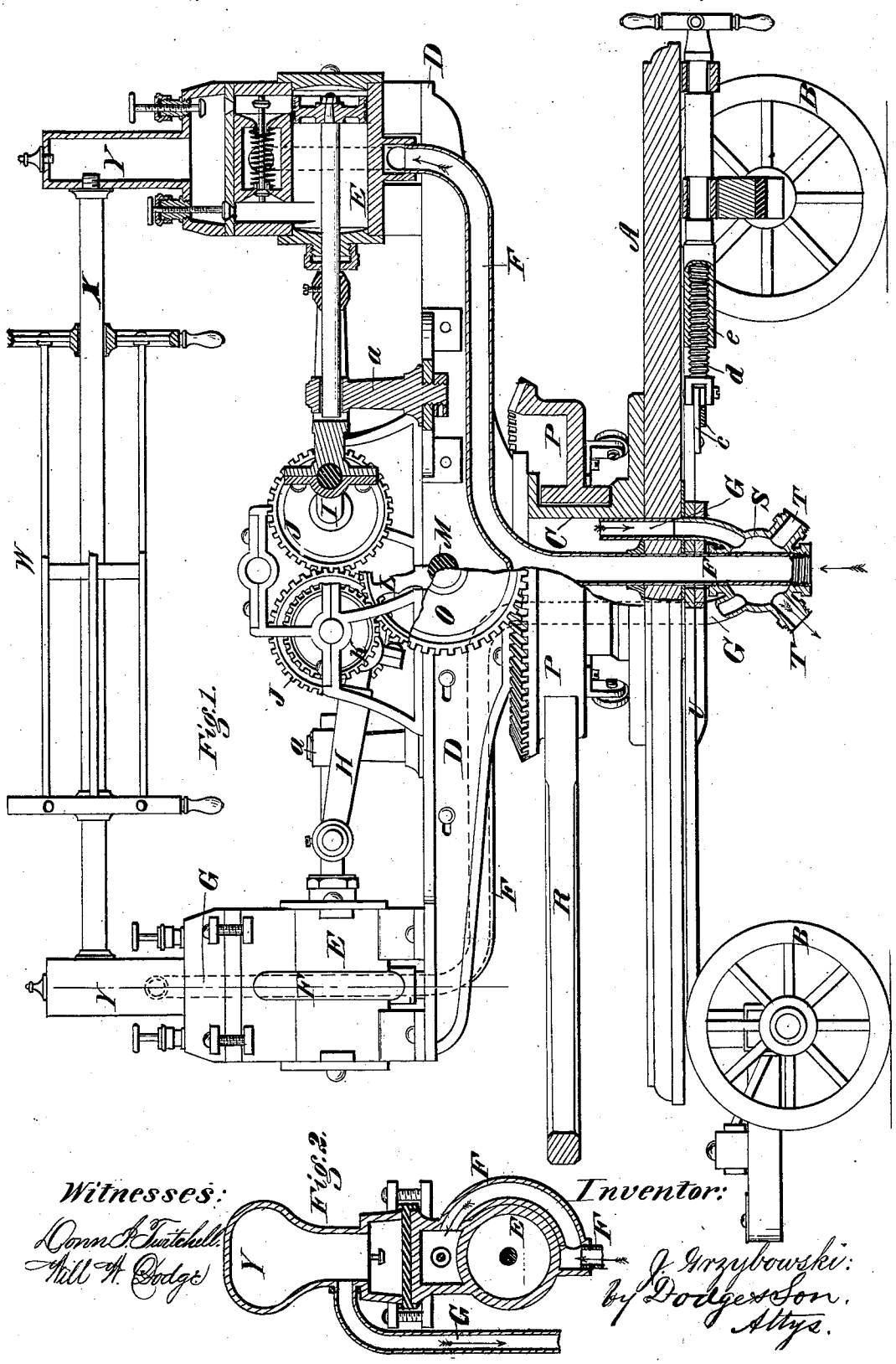

Witnesses:
Donn A. Twitchell.
Will H. Dodge.

Inventor:
J. Grzybowski:
by Dodge & Son.
Attys.

N. PETERS, PHOTO-LITHOGRAPHER, WASHINGTON, D. C.

2 Sheets—Sheet 2.

J. GRZYBOWSKI.

FIRE-ENGINE.

No. 193,603. Patented July 31, 1877.

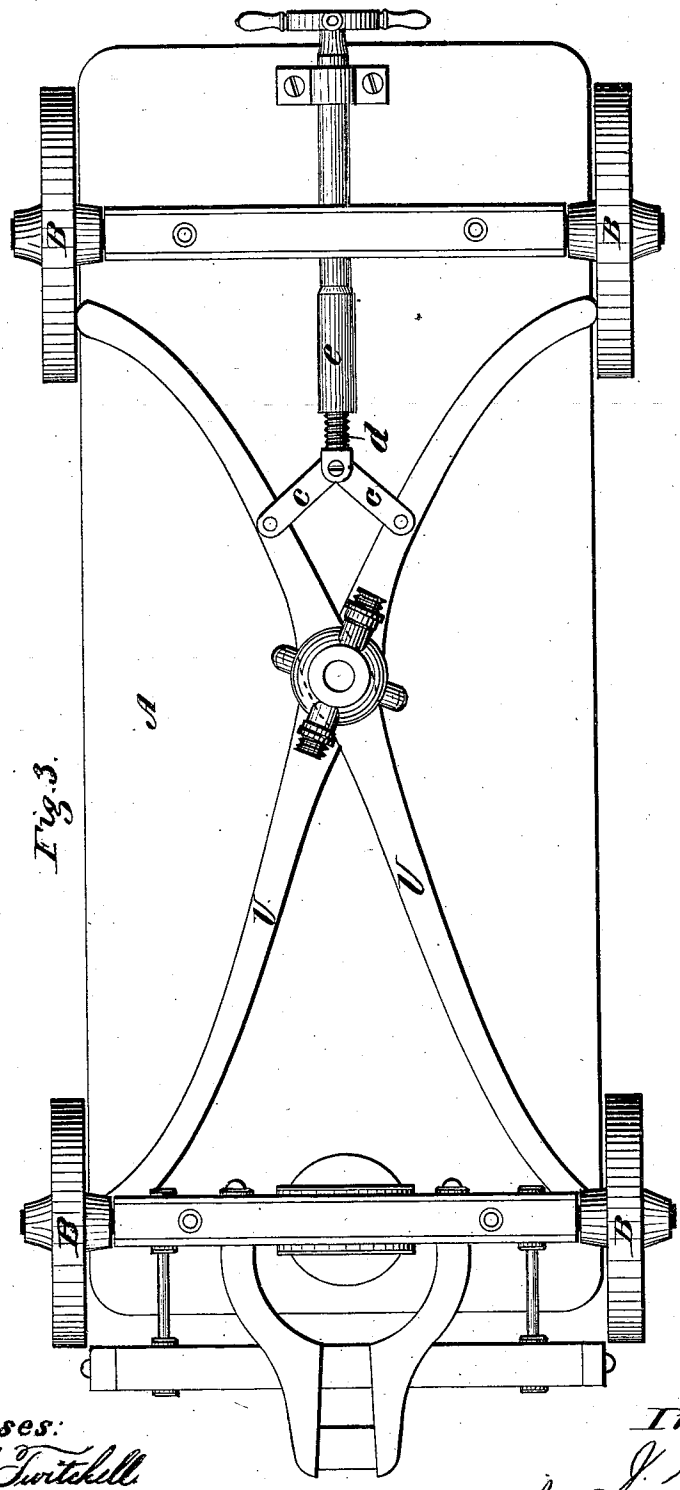

Fig. 3.

Witnesses:
Louis A. Switchell
Will H. Dodge.

Inventor:
J. Grzybowski.
by Dodges & Sons
Attys.

N. PETERS, PHOTO-LITHOGRAPHER, WASHINGTON, D. C.

UNITED STATES PATENT OFFICE.

JULIAN GRZYBOWSKI, OF CHICAGO, ILLINOIS.

IMPROVEMENT IN FIRE-ENGINES.

Specification forming part of Letters Patent No. **193,603**, dated July 31, 1877; application filed June 20, 1877.

To all whom it may concern:

Be it known that I, JULIAN GRZYBOWSKI, of Chicago, in the county of Cook and State of Illinois, have invented certain Improvements in Pumps, of which the following is a specification:

My invention relates to a pump to be actuated by horse-power, intended more especially for use as a fire-engine.

The invention consists in sustaining the pump on a wheeled frame by means of a tubular post, through which the connecting-pipes pass, and around which a horizontal driving-wheel, adapted to receive sweeps, rotates; in sustaining a reel on the pump by means of the air-chambers; in a brake of novel construction, to hold the wheels fast when the pump is in action, and in other details, hereinafter described.

Figure 1 is an elevation of my pump, with one end in section; Fig. 2, a transverse section of one of the pumping-cylinders and the pipes connecting therewith; Fig. 3, a bottom-plan view of the machine.

A represents a truck or frame mounted on four wheels, B, after the manner of an ordinary wagon, so that it may be drawn by horses.

C represents a fixed tubular post mounted on the truck, and sustaining the horizontal frame D, the opposite ends of which are provided with two pump-cylinders, E.

Each cylinder is provided with inlet and outlet ports and valves, a piston, a supply-pipe, F, and a discharge-pipe, G, which may be arranged in the same manner as in the ordinary double-acting pumps in common use, or in any special manner that may be desired, provided the pump receives and delivers water at each stroke.

The piston-rods of the pumps are guided in standards *a* on the frame, and are connected to pitmen H, which are actuated each by two transverse crank-shafts, I, mounted in bearings on the main frame, as shown.

The two crank-shafts are provided with pinions J, gearing into each other, and one of them also provided with a driving-pinion, K, which receives motion from a pinion, L, mounted on a transverse shaft, M, which latter is provided with and driven by a bevel-pinion, O, which is, in turn, driven by a large bevel-gear wheel, P, revolving upon and around the tubular post C, as shown.

The wheel P, which is the main driving-wheel of the pump, is provided in one side with a socket to receive an operating-sweep or draft-lever, R, which may be withdrawn and applied as a tongue or draft-pole for the truck when it is to be drawn about.

In operating the pump the team is attached to the end of the sweep and driven around the truck, the effect of which is to rotate the wheel P and cause it, through the intermediate parts, to operate both pump-pistons.

The two delivery-pipes of the cylinders are carried downward through the central tubular post, and connected to a globular chamber, S, which is attached to the under side of the truck, and provided with two or more delivery-necks, T, to receive hose.

The two supply-pipes F of the cylinders are merged into one and carried down through the post C and the globular chamber S, and provided with a mouth to receive a suction or supply pipe.

For the purpose of locking the pump firmly in position while in action I mount on the under side of the truck two crossed and pivoted bars, U, so arranged that their ends may swing against the inside faces of the truck-wheels. The two arms are connected by links *c* to a screw-rod, *d*, mounted in a sleeve, *e*, which is mounted in bearings on the truck in such manner that it cannot move endwise, and provided on its end with a hand-wheel by which to turn it. The rotation of the sleeve moves the screw endwise, and causes it, by means of the links, to force the arms against, or draw them from, the wheels, according to the direction in which the sleeve is rotated.

In order that a supply of hose may be readily carried with the pump, I mount a reel, W, on a shaft, X, the ends of which latter are screwed into and sustained by the air-chambers Y of the two pump-cylinders, as shown. The reel thus mounted is above and out of the way of the operating mechanism, and is in no way objectionable. The reel-shaft, while supported by the air-chambers, serves in turn to brace them and the cylinders, and give the parts an additional firmness and stability.

While the pump is ordinarily intended to

be operated by the single team by which it is drawn, it is obvious that it may be enlarged to any desired extent, and provision made for the attachment of two or more sweeps and teams.

While the arrangement of driving-gear shown is considered the best, it is manifest that any suitable gearing may be used between the main driving-wheel and the pumps.

Having thus described my invention, what I claim is—

1. A wheeled truck or frame provided with a pumping mechanism, sustained by a post or standard, in combination with the horizontal driving-wheel rotating upon and around said post, substantially as and for the purpose set forth.

2. A pump having a horizontal driving-wheel mounted upon, and its supply and delivery pipes passed through, a hollow standard sustaining the pump, substantially as shown and described.

3. A wheeled truck supporting a pumping mechanism, operated by a horizontal draft-lever or sweep, substantially in the manner shown and described, whereby the pump is adapted to be operated by the team by which it is drawn from place to place.

4. In combination with the wheeled truck having the two pumping-cylinders and their air-chambers thereon, the reel W, having its shaft X sustained by the air-chambers, as shown.

5. In combination with the wheeled truck, the crossed and pivoted brake-arms U and mechanism for operating them, substantially as shown.

JULIAN GRZYBOWSKI.

Witnesses:
PETER KIOLBASSA,
PIOTR KOMEWITZ.