Dec. 16, 1924. 1,519,594

G. E. SHOEMAKER

WATER HEATING APPARATUS

Filed May 18, 1921

Fig. 1

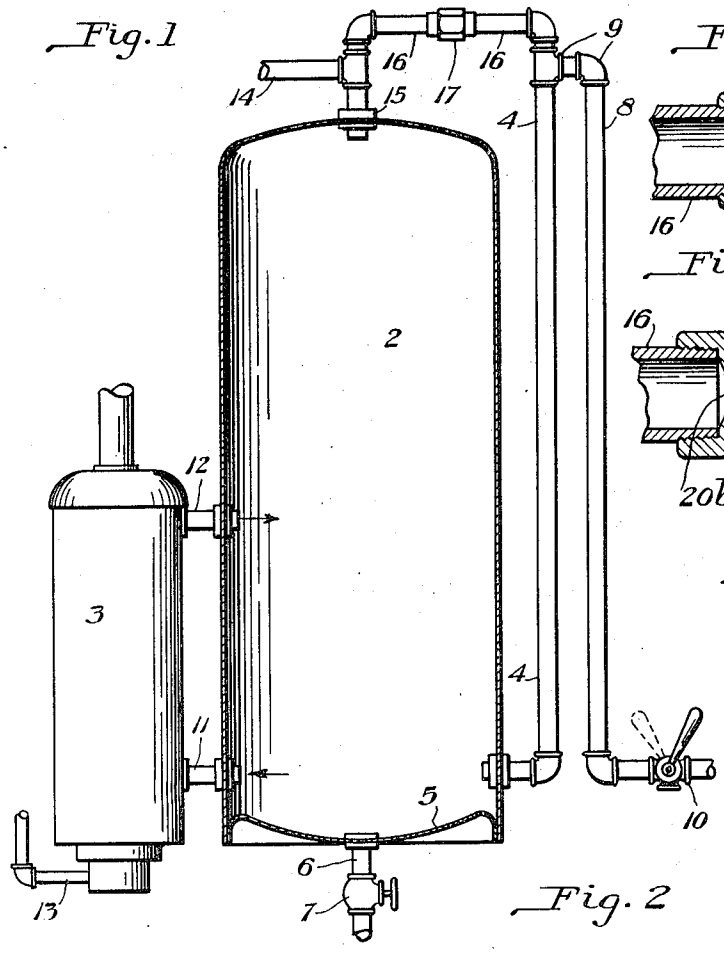

Fig. 3

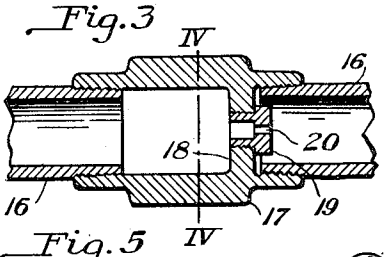

Fig. 5

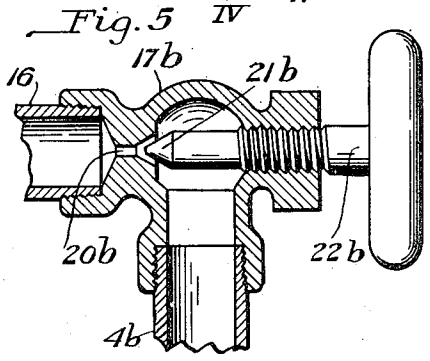

Fig. 4

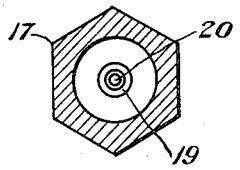

Fig. 2

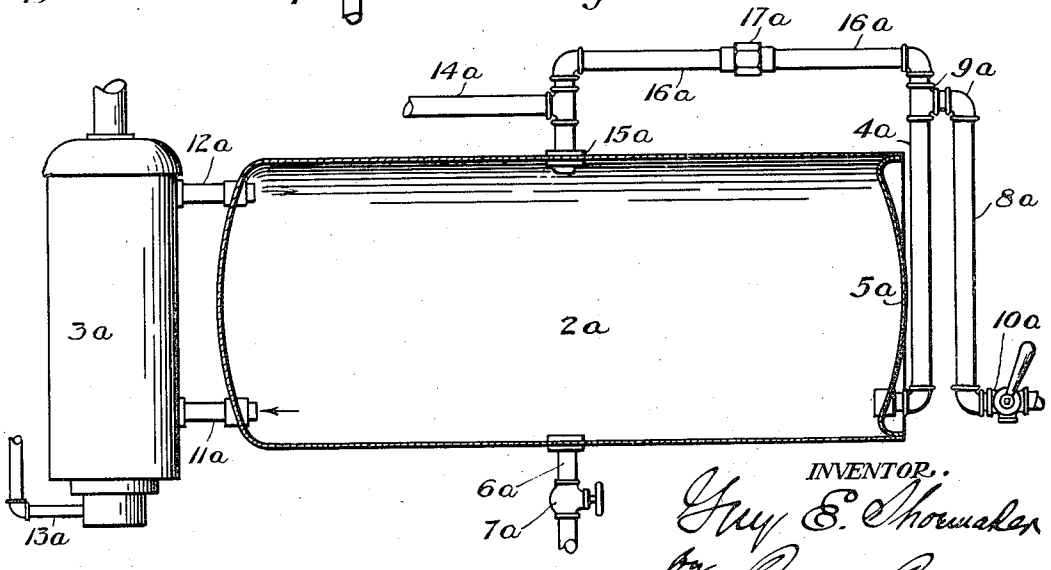

INVENTOR.

Guy E. Shoemaker

by C. M. Clarke

attorney

Patented Dec. 16, 1924. 1,519,594

UNITED STATES PATENT OFFICE.

GUY E. SHOEMAKER, OF FREEDOM, PENNSYLVANIA.

WATER-HEATING APPARATUS.

Application filed May 18, 1921. Serial No. 470,518.

To all whom it may concern:

Be it known that I, GUY E. SHOEMAKER, a citizen of the United States, residing at Freedom, in the county of Beaver and State of Pennsylvania, have invented certain new and useful Improvements in Water-Heating Apparatus, of which the following is a specification.

My invention is an improvement in water heating and storage apparatus for domestic or other use, and has for its object to provide means for simplifying and improving mechanism of this class.

Ordinarily, in heating water in a boiler it is customary to introduce the cold water supply through a pipe leading downwardly towards the bottom inside the boiler, having at its upper portion a small air or steam circulation port for breaking the vacuum and avoiding siphoning action and drainage of the contents when the supply cock or valve is actuated. Such pipe is subject to corrosion in extended use, and being concealed within the boiler, it frequently is destroyed by action of the water, with the resulting disarrangement of the system.

In my invention I provide a construction in which all interior pipes are eliminated and all connections are exterior to the boiler, utilizing a special construction of ported by-pass connection for preventing siphonage. Various other advantages incidental to the installation, operation and general efficiency of the equipment will be more fully hereinafter described.

In the drawing, illustrating certain preferred embodiments of the invention,

Fig. 1 is a vertical sectional view showing the apparatus as arranged with a vertical boiler;

Fig. 2 is a similar view showing it in connection with a horizontally arranged boiler;

Fig. 3 is an enlarged sectional detail view of my special union provided with the siphonage preventing port;

Fig. 4 is a cross section on line IV—IV of Fig. 3;

Fig. 5 is a sectional detail view like Fig. 3 showing a variable control by-pass port.

In the drawings, 2 is an ordinary range boiler, such as is commonly used for heating water, either with a range water back or with a heater 3 of the instantaneous heater or other type. Boiler 2 is provided with a cold water supply line, as pipe 4, opening into the interior slightly above the bottom 5 which may be welded or riveted to the boiler shell, and of any suitable form for the collection of sediment, mud, etc. An outlet pipe 6 having a controlling valve or cock 7 is provided for drawing off collected sediment or for emptying the boiler in the usual way.

Pipe 4 is connected with the main supply pipe 8 preferably above the water level within the boiler by suitable fitting connections 9 and has a controlling valve or cock 10 with a by-pass port opening to the exterior, of usual construction. By this means, cold water is supplied to the boiler by pipe 4, from supply pipe 8, with cock 10 open. The water within the boiler is heated by heater 3, entering through pipe connection 11, and returning at a higher level by connection 12, the heater operating by a fuel supply 13 of well known form, either constant fuel supply or controlled by the draining-off faucet at any hot water supply terminal.

Hot water is furnished to the supply system by pipe 14 leading from connection 15 at the top of the boiler, where the water is of highest temperature. For the purpose of accomplishing the main object of the invention, I provide between the top of the boiler and supply pipe 8 a connecting pipe 16 with suitable elbow or other fittings to establish communication therewith, through a special union 17. This union, which is illustrated more fully in detail in Figs. 3 and 4, is of limited circulating capacity, for which purpose it is provided with a cross wall 18 and an inserted bushing 19 having a reduced opening 20, of limited cross section, say one-sixteenth of an inch. The bushing is preferably of brass or other suitable non-corrosive material, so that the reduced opening 20 will remain clean and unobstructed. If desired, however, the entire union may be of similar non-corrosive material, with the aperture 20 directly through the cross wall 18, with the same results.

In Fig. 5 I show a modified construction of fitting 17^b of ordinary needle valve construction, in which the circulation through port 20^b may be accurately regulated and controlled by means of the taper valve terminal 21^b of threaded stem 22^b to establish communication between pipe 16 and extension 4^b leading to fitting 9.

In operation, when cock 10 is opened,

the contents of pipe 8 may be emptied by gravity below fittings 9, but by reason of the air or steam supply through port 20, it will be impossible to maintain a vacuum and resulting siphonage of the contents of the boiler through pipe 4, so that the contents of boiler 2 will remain unaffected. The pressure at the circulation restricting port 20 constantly tends to unbalance the equilibrium, not only of pressure, but also flow, of the water, and renders the system normally open at all times for additional supply to the boiler, but prevents at all times any tendency as to emptying by siphon action. The interior cold water supply pipe of the old construction, with its accompanying objections, is eliminated, while the direct outside connection with the base area of the boiler in conjunction with the by-pass connection at the top with the hot water delivery pipe through the restricted connection 17, ensures continuous service operation with the advantage of simplicity and economy as to original installation and cost.

If desired, the boiler 2^a may be mounted horizontally, as in Fig. 2, and the various connections of the corresponding parts made in the manner shown and referred to by corresponding numerals having the exponent "a."

The boiler shell is preferably of one piece of pressed steel having the rounded head at one end and the inserted end 5 at the other, dished as shown, to provide resisting strength and also a collecting pocket for collection of sediment, in upright position. However, any other design or form of construction may be utilized within the scope of the invention.

The general arrangement of the parts may also be changed or varied to suit different conditions of use or application, in which respect the invention is not limited to the specific field of domestic hot water installations, as other uses and applications will suggest themselves to those skilled in the art.

What I claim is:

The combination with a boiler, of a branch cold water supply pipe opening into the boiler at the lower portion thereof and extending upwardly exteriorly of the boiler to a point above the top thereof, a main cold water supply pipe connected at one end with the upper end of said branch cold water supply pipe and extending downwardly substantially to the lower end of the branch cold water supply pipe, a combined cut-off and bleed valve interposed in the main cold water supply pipe, a hot water delivery pipe connected with the upper portion of the boiler, and a conduit connecting the hot water delivery pipe with the upper end of said branch cold water supply pipe and having a reduced circulation port therein.

In testimony whereof I hereunto affix my signature.

GUY E. SHOEMAKER.