No. 792,884. PATENTED JUNE 20, 1905.

A. L. EICHER.

LOCK NUT.

APPLICATION FILED OCT. 26, 1904.

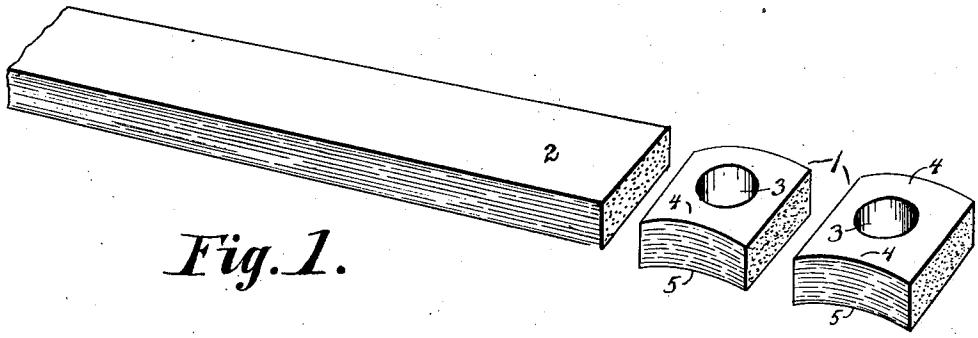

Fig. 1.

Fig. 2.

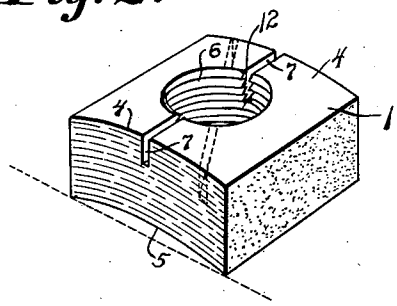

Fig. 3.

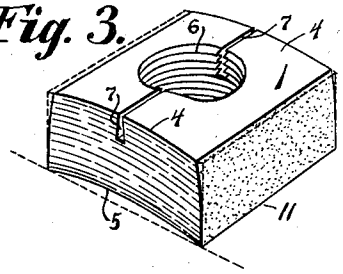

Fig. 4.

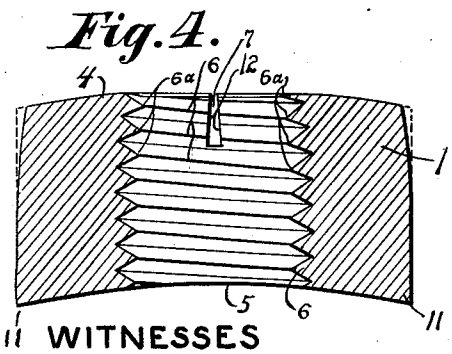

Fig. 5.

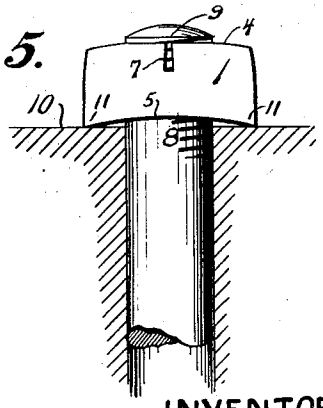

WITNESSES

Jos. J. Hosler.

Minnie L. Anthony

INVENTOR

Albert L. Eicher,

BY

Harry Frease.

ATTORNEY

No. 792,884. Patented June 20, 1905.

UNITED STATES PATENT OFFICE.

ALBERT L. EICHER, OF ALLIANCE, OHIO.

LOCK-NUT.

SPECIFICATION forming part of Letters Patent No. 792,884, dated June 20, 1905.

Application filed October 26, 1904. Serial No. 230,038.

To all whom it may concern:

Be it known that I, ALBERT L. EICHER, a citizen of the United States, residing at Alliance, in the county of Stark and State of Ohio, have invented a new and useful Lock-Nut, of which the following is a specification.

The invention relates to a nut which will automatically lock or bind itself on the threaded shank of a bolt when applied thereon; and the object of the improvement is to make the nut complete within itself and so that it will operate without any collateral attachment or appliance, excepting only the ordinary wrench used to turn it onto the bolt-shank. This object is attained by the construction and method of making illustrated in the accompanying drawings, in which—

Figure 1 is a perspective view of a bar of metal, showing two nut-blanks cut off the end; Fig. 2, a perspective view of the nut with the thread cut therein and a kerf cut across the outer face; Fig. 3, a similar view showing the outer parts of the nut compressed to partly close the kerf; Fig. 4, an enlarged section of the finished nut, showing the constricted aperture and deflected threads in the face side; and Fig. 5, a side elevation of the nut applied on the shank of a bolt.

Similar numerals refer to similar parts throughout the drawings.

The nut is made out of the blanks 1, preferably cut from a rolled bar 2 of suitable metal, so that there will be a grain in the metal running through the nut in one direction and the transverse direction will be across the grain. When the blank is cut and for facility in manufacture preferably by the same operation, the axial aperture 3 is punched in the blank and the same is bent or curved in the direction of its depth to be convex on its outer face 4 and concave on its inner face 5, the convexity and concavity being longitudinal with reference to the grain of the metal. The usual thread 6 is then cut in the axial aperture, and the kerf 7 is cut in the outer face of the nut and preferably diametrically across the grain thereof. The kerf is shown as being cut squarely across the grain, which is generally the best location for it, but, if desired, it can be made somewhat diagonal, as indicated by broken lines in Fig. 2. After the kerf is cut the adjacent outer parts of the nut are compressed endwise—that is, in the direction of the grain—so as to approximately close the kerf, as shown in Figs. 3 and 4. This compression inclines or curves the ends of the nut inward toward its outer face, and the closing of the kerf is accomplished principally by a longitudinal rearrangement of the molecules of the metal in the outer part of the nut; but there may also be a partial but preferably not an entire straightening of the curved blank. The bending inward of the outer part of the nut on each side of the kerf acts to deflect slightly downward the threads 6^a in the outer part of the aperture, as shown in Fig. 4. When the nut is turned onto the threaded shank 8 of a bolt, the operation is ordinary until the outer constricted part of the axial aperture reaches the end 9 of the shank, whereupon the shank is gripped by the bent-in part of the nut on each side of the kerf. As the nut is turned against the object 10 the inner end edges 11 first come in contact, and the further turning tends to straighten the remaining endwise curvature of the nut, with the effect that the bolt-shank is more tightly gripped by the parts of the nut on each side of the kerf. The inward deflection of the outer parts of the threads of the nut acts to further bind the same against the threads of the bolt-shank, and the sharp edges 12 of the nut-threads where the same are cut by the kerf tend to gouge or bite into the threads of the bolt-shank, which further binds the nut on the shank. By the coöperation of these several features of construction, which all tend to tighten and grip the nut on the shank with a power increasing in intensity as the nut is turned against the object, the nut is securely locked on the bolt-shank, from which it can only be removed by the use of a power considerably greater than that by which it is applied, and it is found empirically that when the nut is applied to the shank and the binding parts have set in their locking relation the power required to remove the nut is much greater than when the nut is first applied.

It is evident that the endwise curvature of the nut is not essential to the binding effect

of the bent-in parts on each side of the kerf; but this curvature is desirable, because it assists and augments the locking action of the nut.

The process of making the lock-nut herein illustrated and described will be made the subject of another application for Letters Patent.

What I claim herein as my invention, and desire to secure by Letters Patent, is—

1. A lock-nut made of metal having a grain and being bent to concavely curve its inner face in the direction thereof, there being a kerf in the outer face across the grain with the adjacent parts compressed along the grain to approximately close the kerf.

2. A lock-nut made of metal having a grain, there being a kerf in the face across the grain with the adjacent parts compressed along the grain to approximately close the kerf.

In testimony whereof I have hereunto signed my name to this specification in the presence of two subscribing witnesses.

ALBERT L. EICHER.

Witnesses:

HARRY FREASE,

MINNIE F. ANTHONY.