June 8, 1926.

C. L. HOPKINS

1,587,837

PULL SWITCH SOCKET

Filed Sept. 7, 1920

2 Sheets-Sheet 1

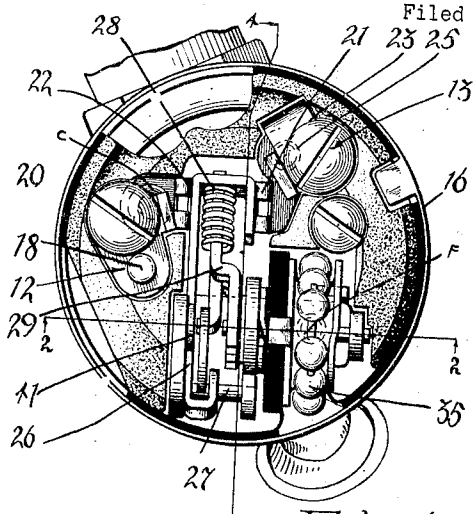

Fig. 1.

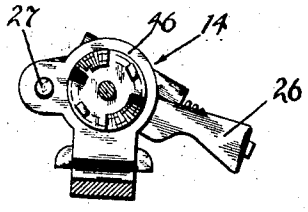

Fig. 5.

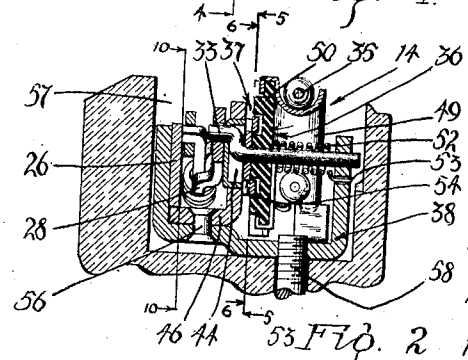

Fig. 2.

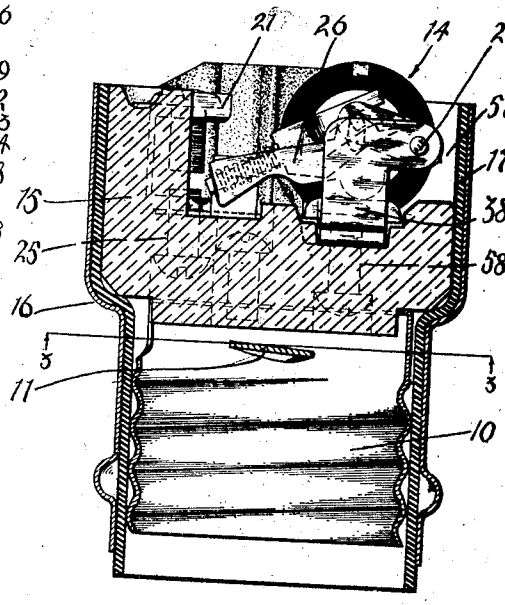

Fig. 4.

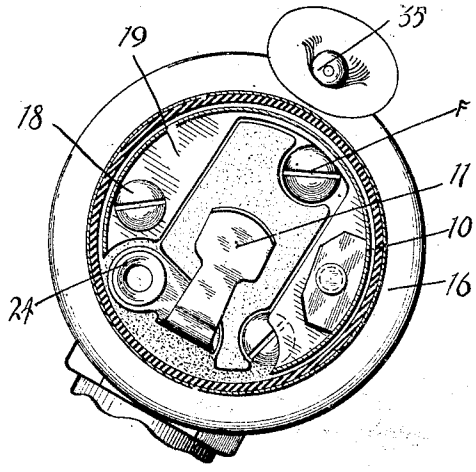

Fig. 3.

Inventor:
Charles L. Hopkins

By Jones, Waddington, Ames & Seibold
Attys.

June 8, 1926.

C. L. HOPKINS

1,587,837

PULL SWITCH SOCKET

Filed Sept. 7, 1920

2 Sheets-Sheet 2

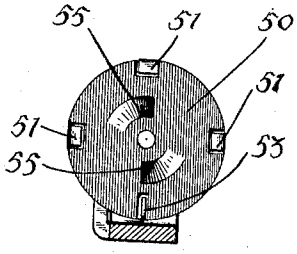

Fig. 6.

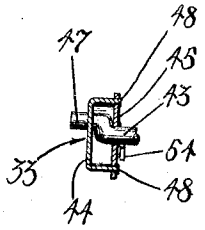

Fig. 7

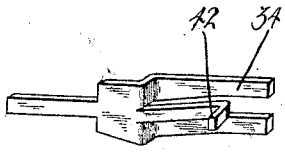

Fig. 8.

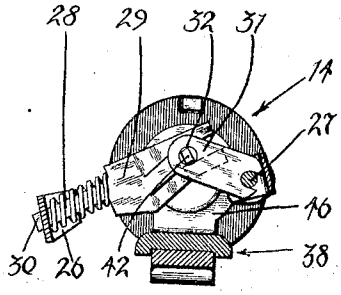

Fig. 10.

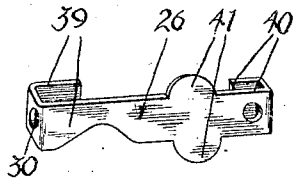

Fig. 9.

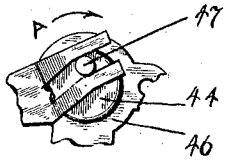

Fig. 11

Inventor:
Charles L. Hopkins

By Jones, Addington, Ames & Seibold
Attys.

Patented June 8, 1926. 1,587,837

UNITED STATES PATENT OFFICE.

CHARLES L. HOPKINS, OF RIVER FOREST, ILLINOIS, ASSIGNOR TO BENJAMIN ELECTRIC MANUFACTURING COMPANY, OF CHICAGO, ILLINOIS, A CORPORATION OF ILLINOIS.

PULL-SWITCH SOCKET.

Application filed September 7, 1920. Serial No. 408,531.

My invention relates to electrical connector devices and more specifically to pull switch sockets.

One of the objects of my invention is to provide an improved pull switch mechanism which will be durable and efficient in operation, simple in construction and easy to assemble.

Further objects will appear from the detailed description to follow and from the appended claims.

In the drawings, in which an embodiment of my invention is shown;

Fig. 1 is a top plan view of a pull switch angle socket;

Fig. 2 is a section on the line 2—2 of Fig. 1;

Fig. 3, is a section on the line 3—3 of Fig. 4;

Fig. 4 is a section on the line 4—4 of Fig. 1;

Fig. 5 is a section on the line 5—5 of Fig. 2;

Fig. 6 is a section on the line 6—6 of Fig. 2;

Fig. 7 is a detail sectional view of part of the switch;

Fig. 8 is a detail perspective view of part of the switch;

Fig. 9 is a detail perspective view of the switch arm or blade;

Fig. 10 is a section on the line 10—10 of Fig. 2; and,

Fig. 11 is a detail view of part of the switch.

The construction, shown in the drawing comprises in a general way, a pull switch angle socket having a threaded shell contact 10, a center contact 11, wiring terminals 12 and 13 for the contacts 10 and 11 respectively, switch mechanism 14 for controlling the circuit between the center contact 11 and wiring terminal 13, a substantially cylindrical insulating base 15 supporting the contacts 10 and 11, the wiring terminals 12 and 13, switch mechanism 14 and a sheet metal shell or casing 16 surrounding the insulating base 15 and the threaded shell contact 10. An insulating fibre lining or cup 17 is provided just inside the casing 16 for insulating the threaded shell contact 10 from the sheet metal casing.

The threaded shell contact 10 is always electrically connected with the wiring terminal 12 by means of a screw 18 (Figs. 1 and 3), which extends through an opening in the flange 10 of the threaded shell contact, and is threaded into the binding plate 20 of the wiring terminal 12, the screw 18 thus not only serving to electrically connect the shell contact with the binding plate but to hold the parts in position on the insulating base 15.

The switch mechanism 14 controls the circuit between two spring contact fingers 21 and 22 (Figs. 1 and 4) the spring contact finger 21 being always electrically connected with the wiring terminal 13 and the spring contact 22 being always electricallly connected with the center contact 11. This electrical connection between the spring contact 21 and the binding terminal 13 is effected by means of a metal stamping 23 which may have a part which forms the binding plate for the wiring terminal 13. The electrical connection between the center contact 11 and the switch contact 22 is effected by means of a metal eyelet 24 which extends through and is riveted over the base portions of the spring contact 22 and center contact 11, that not only electrically connects these parts, but serves to hold them in place on the insulating base 15. The spring contact finger 21 and the stamping 23 are secured in place on the insulating base 15 and held in electrical engagement with each other by means of a screw 25 (Figs. 1 and 4), which extends through registering openings in the insulating base 15 and the base of the spring contact finger 21, and is threaded into the base of the metal stamping.

The switch mechanism 14, which controls the circuit between the spring contact fingers 21 and 22 and between the wiring terminal 13 and the center contact 11 comprises a pivoted oscillatable switch blade or arm 26, mounted on a pivot pin 27, a coil compression spring 28 bearing on the switch blade 26, and movable past a dead center line, to cause the switch arm 26 to oscillate back and forth, a spring supporting and shifting link 29 surrounded by the spring 28, and having a sliding engagement with the switch blade 26, an oscillatable supporting link 31, pivoted on the pivot pin 27 and having a pivotal engagement 32 with the spring shifting link 29, a cam crank 33, operating in a slot 34 of the spring shifting member 29 for swinging the spring shifting member back and forth, a pull chain 35, a switch lever 36 to which

the chain 35 is secured, and ratchet mechanism 37 whereby the oscillating movement of the switch lever 36 causes a rotary step-by-step movement of the cam 33, and a switch frame 38 for supporting the various parts of the switch mechanism.

The switch blade 26 may be formed of an integral sheet metal stamping having a pair of contact portions 39 for engaging the contacts 21 and 22 respectively, for electrically connecting the contacts and having a bearing portion 40 provided with openings for the pivot pin 27. The switch blade is widened at 41 to assist in keeping the switch parts assembled as will appear more clearly hereinafter. The spring shifting member 29 may be formed as a single integral sheet metal stamping having a journal portion 42 for engaging an opening in the supporting member 31, whereby the members 29 and 31 are pivotally connected together. The supporting member 31 is prevented from slipping off from the journal portion 32 by means of the wide portion 41 of the switch blade 26 hereinbefore referred to. The supporting link 31 may be a sheet metal stamping, forked at one end to straddle the pivot pin 27. The cam crank 33 which operates in the slot 34 comprises a piece of bent wire 43, a cup-shaped sheet metal stamping 44 forming a journal portion, and a sheet metal stamping 45 which forms a retaining and positioning member for the axial portion of the bent wire 43. This cup-shaped journal 44 is rotatably mounted in a sheet metal bearing bracket 46 (Figs. 2, 5 and 10) this bearing bracket also serving to support the pivot pin 27 on which the switch blade 26 and swinging link 31 are mounted. The crank pin portion 27 of the crank 33 extends through an opening in the cup-shaped journal member 44, whereby the crank pin is definitely positioned in this journal member. The journal member 44 and positioning member 45 are secured together by riveting as indicated at 48 in Fig. 7.

The switch lever 36 comprises a sheet metal chain rail 49 to which the pull chain 35 is secured, and an oscillatable insulating fibre disc 50 to which the chain rail 49 is secured. This oscillatable disc 50 is mounted on the central axial portion of the bent wire shaft 43. The chain rail 49 is secured to this oscillatable disc 50 by bending integral lugs 51 over into corresponding recesses in the fibre disc 50. For returning the switch lever 36 after it has been actuated by the pull chain, a coil torsion spring 52 is provided one end of which is connected to the switch frame 38 as indicated at 53 and the other end of which is connected to the oscillatable disc 50, as indicated at 53.

The ratchet mechanism 37 whereby the oscillatable movement of the switch lever 36 causes rotary step-by-step movement of the cam crank 33, comprises a pair of ratchet teeth 54 struck up from the sheet metal stamping 45 (Figs. 2 and 6), these ratchet teeth 54 engaging in corresponding ratchet depressions 55, formed in the side face of the insulating disc 50.

The bracket 46 is secured to the main switch frame by means of a rivet 56 (Fig. 2) and the main switch frame 38 is secured in a recess 57 of the insulating base by means of a screw 58 threaded into the base of the switch frame.

As shown in Figs. 8, 10, and 11, the slot 34 in which the crank pin portion 47 of the cam crank 33 operates is slightly angular to provide for an even pull on the pull chain 35. Each actuation of the pull chain 35 moves the crank portion 27 to a movement of 180 degrees, through the ratchet mechanism 37, this movement of the crank pin 47 moving the spring shifting member 29 from one extreme position to the other, causing the oscillation of the switch arm 26 to make or break the electrical connection between the spring contact fingers 21 and 22. The rotation of the crank pin 47 is as indicated by the arrow A in Fig. 11.

While I have shown but one embodiment of my invention, it may be embodied in other forms covered and defined by the appended claims.

What I claim as new and desire to secure by Letters Patent of the United States is:

1. A switch mechanism comprising a pivoted switch blade oscillatable back and forth, a spring bearing on said switch blade, a spring shifting member for shifting said spring back and forth past a dead center line to cause oscillation of said switch blade, a supporting member mounted on a fixed pivot and having a pivotal connection with said pivoted supporting member, said spring shifting member having a slot therein, and means to oscillate said spring shifting member comprising a cam crank having a crank pin operating in said slot.

2. A switch mechanism comprising a pivoted switch blade oscillatable back and forth, a spring bearing on said switch blade, a swinging spring shifting member for shifting said spring back and forth past a dead center line to cause oscillation of said switch blade, a supporting member mounted on a fixed pivot and having a pivotal connection with said spring shifting member, means for operating said spring shifting member comprising a crank shaft having a crank pin engaging said spring shifting member, and means for operating said crank pin comprising an oscillatable member mounted on said crank shaft.

3. A switch mechanism comprising a pivoted switch blade oscillatable back and forth, a spring bearing on said switch blade, a

swinging spring shifting member for shifting said spring back and forth past a dead center line to cause oscillation of said switch blade, a supporting member mounted on a fixed pivot and having a pivotal connection with said spring shifting member, and means for operating said spring shifting member comprising a crank shaft having a crank pin engaging said spring shifting member, and means for operating said crank pin comprising an oscillatable member mounted on said crank shaft, and ratchet transmission mechanism between said oscillatable member and crank pin.

4. A switch mechanism comprising a pivoted switch blade, oscillatable back and forth, a spring bearing on said switch blade, a swinging spring shifting member for shifting said spring back and forth past a dead center line, to cause oscillation of said switch blade, said spring shifting member having an angular slot therein, and means for controlling and operating said spring shifting member comprising a crank shaft having a pin operating in said angular slot.

5. A switch mechanism comprising a pivoted switch blade, oscillatable back and forth, a spring bearing on said switch blade, a swinging spring shifting member, for shifting said spring back and forth past a dead center line, to cause oscillation of said switch blade, a supporting member, mounted on a fixed pivot and having a pivotal connection with said spring shifting member and means for operating said spring shifting member to cause said switch blade to oscillate, comprising a ratchet, said supporting member and switch blade being coaxially mounted.

6. A switch, comprising a pivoted switch blade, oscillatable back and forth, a spring bearing on said switch blade, a spring shifting member, oscillatable back and forth to move said spring past a dead center line to cause the switch blade to oscillate back and forth, said spring shifting member being formed of sheet material and having a tongue struck up therefrom leaving a longitudinally extending slot, a journal portion formed integral with said tongue, a crank pin, operating in said slot and a supporting link pivoted to said journal portion.

In witness whereof, I have hereunto subscribed my name.

CHARLES L. HOPKINS.