Dec. 12, 1961 P. C. KLINE 3,012,455

REFRIGERATED HOPPER EQUIPMENT FOR AUTOMATIC RIVETING MACHINES

Filed June 27, 1957

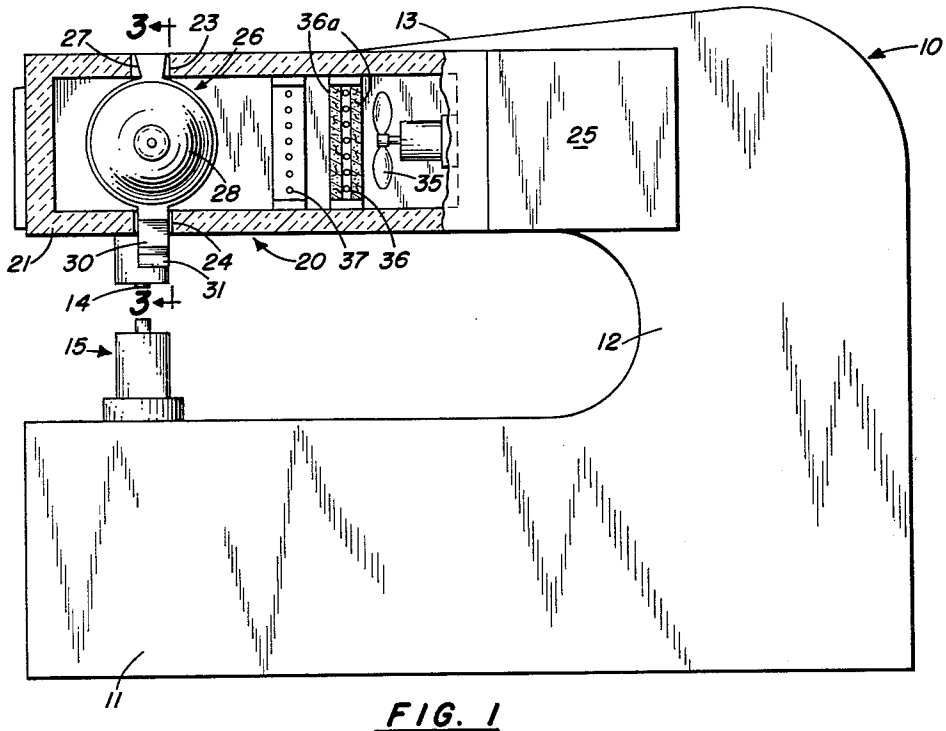

FIG. 1

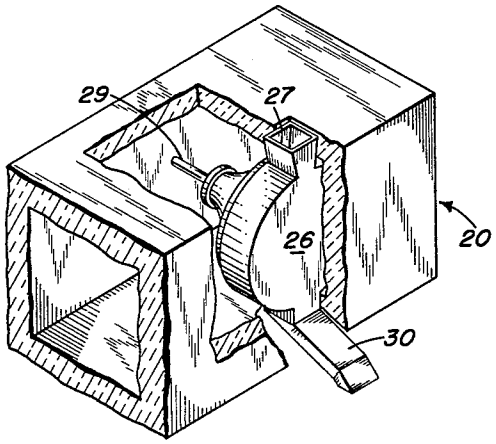

FIG. 2

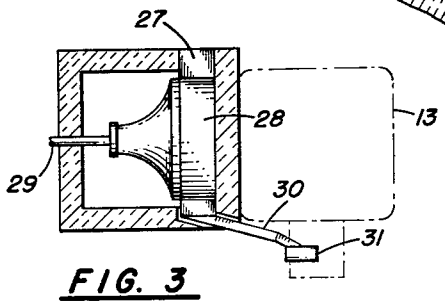

FIG. 3

INVENTOR.
PAUL C. KLINE
BY
ATTORNEYS

United States Patent Office 3,012,455 Patented Dec. 12, 1961

3,012,455

REFRIGERATED HOPPER EQUIPMENT FOR AUTOMATIC RIVETING MACHINES

Paul C. Kline, Baltimore County, Md., assignor, by mesne assignments, to the United States of America as represented by the Secretary of the Navy

Filed June 27, 1957, Ser. No. 668,586
12 Claims. (Cl. 78—46)

This invention relates to riveting machines and, particularly to squeeze riveters wherein the rivets are fed from a hopper, usually automatically, to a rivet chute and, thence, by an injector to the workpiece where they are secured by pressure in the workpiece frame.

In non-automatic riveters it is common practice to chill the rivets in refrigerated storage boxes near the machine so that, after insert and restoration to room temperature, a tight fit will result. However, in automatic machines this practice is not feasible since the rivets warm to room temperature in the riveter hopper. Broadly stated, therefore, the primary object of the invention is to provide cooling means specially adapted for cooling rivets as used in an automatic riveting machine. An object, also, is to provide hopper cooling means subject to two step temperature control. Another invention object is to prevent rivet agglomeration in the hopper due to freezing of moisture in the air flow about the rivets. An additional object is to maintain sub-zero temperature of rivets moving in hopper flow to a point closely adjacent the inserting and heading mechanism.

Other objects and many of the attendant advantages of this invention will be readily appreciated as the same becomes better understood by reference to the following detailed description when considered in connection with the accompanying drawings wherein:

FIG. 1 is a side view of an automatic C-type riveter with the refrigeration unit attached, showing the arrangement of hopper and refrigerator elements, parts of the attached unit being in section;

FIG. 2 is a perspective view of a section of the refrigeration unit with parts broken away to show the rivet hopper; and

FIG. 3 is an end view of the hopper taken along lines 3—3 of FIG. 1.

Referring to FIG. 1 of the drawing, there is shown a C-frame riveter 10 having a base section 11, a rising end section 12 and a top section 13, supported by the end section 12 and overlying the base section. The top section 13 is provided with the usual pressure ram 14 and power source for providing a pressure adequate for cold working of the rivets, the ram coacting with the bottom tool 15 in riveter section 11.

Attached to a side of the riveter top section 13 is an elongated refrigeration unit 20, the unit as shown having a casing 21, closed, except for the inlet feed opening 23 and base chute opening 24, and rectangular in shape with the long base side approximately parallel to the top working side of the lower riveter section 11. The unit 20 contains at its inner end a refrigerator compressor unit 25 having a capacity of about 60,000 B.t.u. At the outer end of the unit is inserted the hopper 26, which is shown as of the conventional rotating type including the feeder 27, the rivet selecting and tracking mechanism 28 driven by power shaft 29, and the base chute 30, the chute passing through opening 24 in the base and extending angularly, as indicated in FIG. 3, to overly the riveter injector 31.

Inside the refrigerator casing 21 and intermediate the hopper 26 and compressor 25 is positioned, in sequence from the compressor, a blower fan 35, a cooling coil 36 adapted to hold a freezing temperature around 32° F. and a second cooling coil 37 adapted to hold a sub-zero

temperature, as around —25° F. The purpose of coil 36 is to dehumidify the air passing to the rivets so as to prevent frosting and subsequent freezing together of the hopper rivets. After dehumidification at around 32° F., the air is cooled to sub-zero temperature by the —25° F. coil, this dry, cold air being blown by the fan 35 to and around the hopper where the entire rivet mass is chilled to sub-zero temperatures. As an alternative, a band of desiccants 36*a* may be used in place of, or in addition to, the coil 36 if desired.

In operation the hopper is supplied with a mass of rivets, the refrigerator compressor 25 is energized and the fan 35 is rotated. When the cooling coils are functioning properly, the hopper mechanism is energized to obtain channelled flow of rivets to the chute 30, whence the rivets are guides to the injector 31 and successively conveyed to the workpiece in line with riveter pressure mechanism.

It is of interest to note that the extreme low temperatures of the rivets, due to the use of the plenum chamber as defined by casing 21, is maintained to within a few inches of the rivet inserting and heading mechanism by boxing the chute 30, the cooled air flowing along the chute interior. In actual practice, the sub-zero cooled rivets are conveyed to within two inches of the rivet inserting mechanism.

While a rotating type hopper is indicated, it is apparent that other type hoppers, such as the square container type, may be used. Also, the fan 35 may be placed between the coil 37 and the hopper if desired.

Obviously many modifications and variations of the present invention are possible in the light of the above teachings. It is therefore to be understood that within the scope of the appended claims the invention may be practiced otherwise than as specifically described.

What is claimed is:

1. An automatic riveting machine comprising, a base, a bottom tool secured to said base, a pressure ram, supporting means secured to said base and supporting said ram for coaction with said bottom tool, a casing forming a plenum chamber secured to said supporting means and containing a refrigeration means and a rivet supply means whereby the rivets in the supply means are cooled to a desired temperature, and transfer means connected to said supply means for transferring the cooled rivets to a position below the pressure ram for the riveting operation.

2. The riveting machine as defined in claim 1 wherein the refrigeration means comprises a compressor and cooling coils, said coils being positioned in line with the rivet supply means and compressor, and means for directing cooled air from said coils to and around said rivet supply means.

3. An automatic mechanism for inserting work elements into a workpiece comprising a base, a force applying means, supporting means for supporting said force applying means in operative position, an automatic supply means secured to said supporting means and including a transfer means for transferring the work elements from the supply means to the operative position of the force applying means, and a refrigeration unit secured to said supporting means and surrounding said supply means and in communication with said transfer means whereby the work elements may be stored and cooled in said supply means and automatically transferred in a cooled condition for the inserting operation.

4. The riveting machine as defined in claim 2, said transfer means including an enclosed chute projecting from said casing and adapted to receive cooled air therefrom, whereby the rivets passing from said rivet supply means are cooled to the point of chute exit.

5. The riveting machine as defined in claim 2, said

casing being closed except for two openings for insertion of a feeder inlet and a chute outlet connected to said rivet supply means, the spacing between said openings and the included inlet and outlet being restricted, whereby, when said air directing means is operating, air is maintained under pressure in said casing.

6. The riveting machine as defined in claim 2, said cooling coils cooling air in said casing to temperature below 0° F.

7. The riveting machine as defined in claim 2, and a dryer interposed between said cooling coils and air directing means.

8. The riveting machine as defined in claim 7, said dryer consisting of a bank of desiccant for absorbing moisture for absorbing moisture in said casing.

9. The riveting machine as defined in claim 7, said dryer consisting of dryer coils for cooling air to around 32° F., said cooling coils cooling air to below 0° F.

10. An automatic riveting machine comprising a C-shaped frame having a base section, a superposed top section and a supporting section between said base and top sections, a plunger element movably mounted adjacent the free end of said top section for movement to and from the inner side of said base section, and a refrigeration unit attached to the top section of said riveting machine, said unit including a hopper for holding a supply of rivets, a chute for conveying rivets from said hopper to a rivet inserting position for actuation by said plunger, a first refrigerating coil adjacent said hopper for freezing the rivets to sub-zero temperature, a refrigeration compressor, a second refrigeration coil and bank of desiccant for air dehumidification positioned adjacent said first coil, a fan

for blowing air through said first and second coil to said hopper, a refrigeration compressor, said compressor, fan, second coil, desiccant, first coil and hopper being in line in the order of listing, and a casing enclosing said hopper, first and second coils, desiccant, fan and compressor.

11. An automatic riveting machine comprising a C-shaped frame having a base section, a superposed top section and a supporting section between said base and top sections, a plunger element movably mounted adjacent the free end of said top section for movement to and from the inner side of said base section, a hopper for supply of rivets to said plunger element, a chute for conveying rivets from said hopper to said plunger element and means secured to said top section for cooling the rivets in said hopper to sub-zero temperatures prior to conveyance to said plunger element.

12. The riveting machine as defined in claim 10, including additional means permitting cooling of the rivets while in transit through said chute.

References Cited in the file of this patent

UNITED STATES PATENTS

1,979,638	Philipp	Nov. 6, 1934
2,019,081	Philipp	Oct. 29, 1935
2,078,660	Gualtiere	Apr. 20, 1937
2,221,127	Bates	Nov. 12, 1940
2,495,070	Mellodge	Jan. 17, 1950
2,524,568	Kritzer	Oct. 3, 1950
2,627,669	Candor	Nov. 6, 1953
2,742,176	Heyl	Apr. 17, 1956
2,763,132	Jue	Sept. 18, 1956
2,763,136	Salisbury	Sept. 18, 1956