Sept. 22, 1942. R. P. SCHERER 2,296,294

CAPSULE STRIPPING APPARATUS

Original Filed Oct. 8, 1935 3 Sheets-Sheet 1

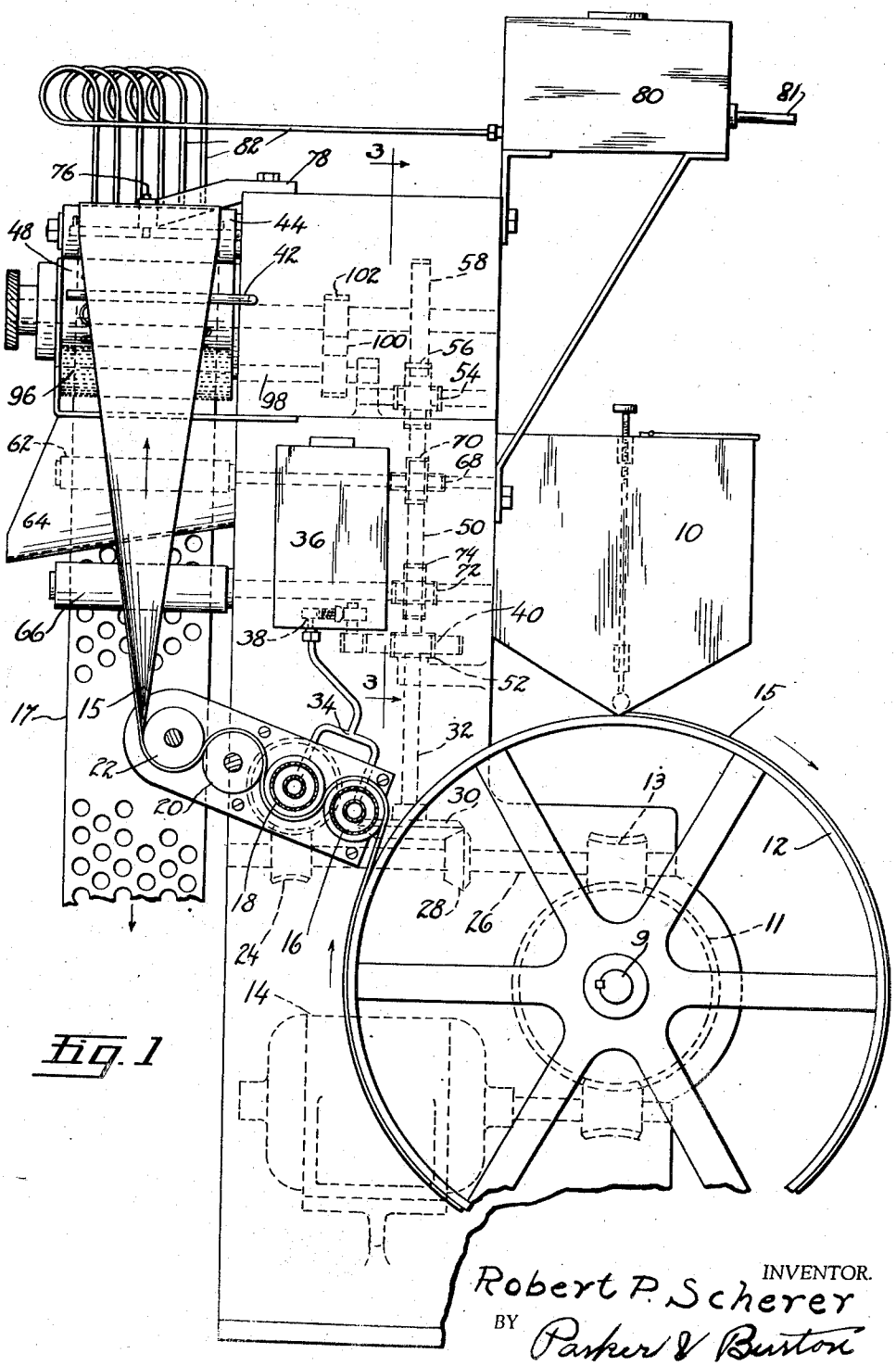

Fig. 1

INVENTOR.
Robert P. Scherer
BY
Parker & Burton
ATTORNEY

Sept. 22, 1942. R. P. SCHERER 2,296,294

CAPSULE STRIPPING APPARATUS

Original Filed Oct. 8, 1935 3 Sheets-Sheet 2

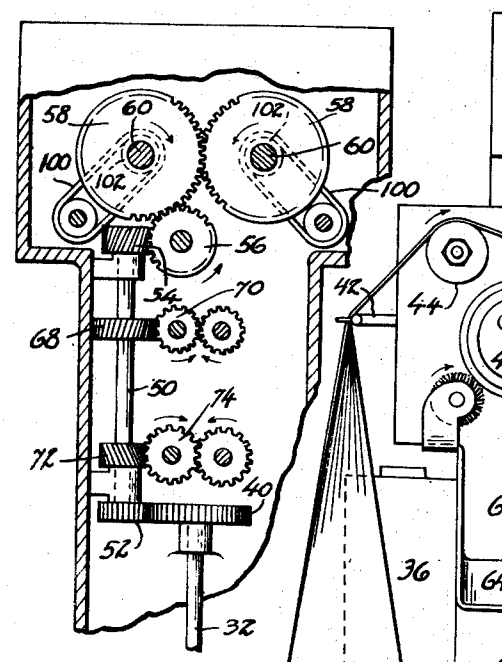

Fig. 3

Fig. 2

INVENTOR.
Robert P. Scherer
BY
Parker & Burton
ATTORNEY.

Sept. 22, 1942. R. P. SCHERER 2,296,294

CAPSULE STRIPPING APPARATUS

Original Filed Oct. 8, 1935 3 Sheets-Sheet 3

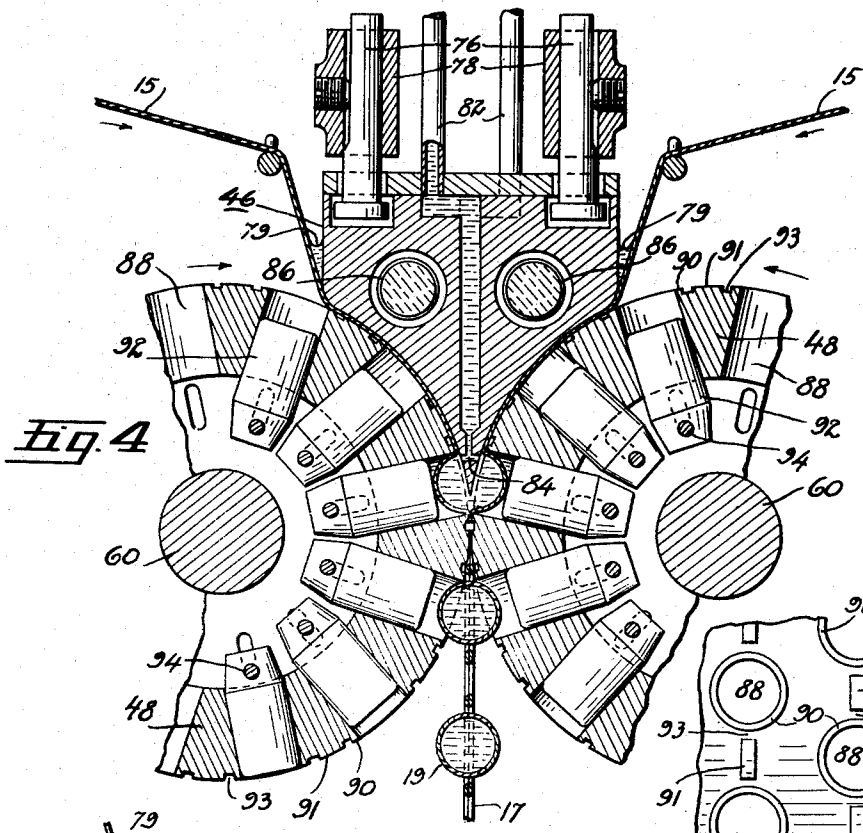

Fig. 4

Fig. 5

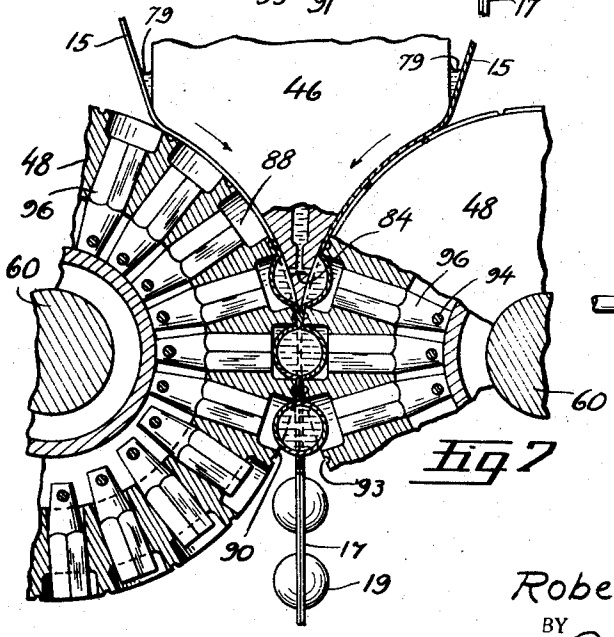

Fig. 7

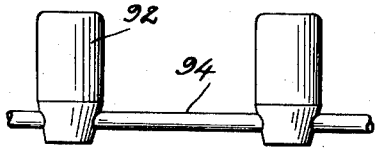

Fig. 6

INVENTOR.
Robert P. Scherer
BY
Parker & Burton
ATTORNEY.

Patented Sept. 22, 1942

2,296,294

UNITED STATES PATENT OFFICE

2,296,294

CAPSULE STRIPPING APPARATUS

Robert P. Scherer, Detroit, Mich.

Original application October 8, 1935, Serial No. 44,017. Divided and this application December 7, 1939, Serial No. 308,103

3 Claims. (Cl. 18—21)

This invention relates to improvements in mechanism for fabricating filled capsules and represents a division of my application Serial No. 44,017, filed October 8, 1935.

An object of the present invention is to provide improvements in apparatus for forming and filling capsules wherein the capsules are formed from juxtaposed plastic sheets, such as gelatin, between which sheets is disposed capsule content substance to fill the capsule shells formed from the sheets. Filled capsules are severed and removed from the sheets.

In the apparatus here illustrated complementary plastic bands of capsule shell forming material are advanced between two die rolls and over a capsule content substance feeder head to form and fill the capsules. The formed capsules are then extracted from the sheets out of which the capsule shells were formed. As here illustrated the improved mechanism is for the purpose of removing these filled capsules from such sheets as the sheets are advanced away from the forming and filling mechanism of the machine.

An object is to provide simple, inexpensive, extracting mechanism which functions to accurately and rapidly remove the filled capsules without injury or damage to the filled capsules.

Other objects, advantages, and meritorious features of the invention will more fully appear from the following description, appended claims, and accompanying drawings, wherein:

Figure 1 is a side elevation of apparatus embodying my invention,

Fig. 2 is a front elevation of the apparatus illustrated in Fig. 1, and

Fig. 3 is an enlarged vertical sectional view illustrating a portion of the driving mechanism.

Fig. 4 is a sectional view showing a preferred form of the capsule forming and filling mechanism,

Fig. 5 is an elevation of a fragment of the die roll shown in Fig. 4,

Fig. 6 is a detail of a modified form of die roll construction, and

Fig. 7 is a sectional view through a modified form of die roll construction including the detail of Fig. 6.

The apparatus to which my improvement here shown pertains is designed to rapidly form and fill capsules as a continuous process and with accurately measured dosages of any desired capsule content substances and without waste of the content material as more fully described in connection with the parent application Serial No. 44,017.

As stated in said parent application, molten gelatin or other suitable capsule shell material is fed from a suitable source of supply to apparatus designed to form two bands or strips of gelatin. These bands are advanced along converging paths into juxtaposition between a pair of die rolls. Accurately measured dosages of fluid or other content substance are discharged onto correspondingly spaced apart selected areas of each band. The pressure of delivery of the fluid dosages deforms said selected areas of the bands forming hollow hemispheres within which the dosages are received. The two bands are then brought together with complementary filled cavities in registration and sealed about the content material forming filled capsules. The functioning is such that during delivery and formation of the capsule, air is excluded therefrom and there is practically no waste of the fluid content.

In the construction shown there is a vat **10** wherein molten gelatin may be maintained at the desired temperature by heating means not here illustrated. The gelatin is delivered therefrom in a controlled stream onto the periphery of a drum **12**. This drum is driven by a motor **14**. The gelatin forms a film or band **15** on the periphery of the drum. This band is taken off the drum and passes through a train of rolls **16, 18, 20** and **22**, which rolls may be driven from gear **24** carried on shaft **26** as shown in Fig. 1. Shaft **26** is provided with a gear **28** which, through pinion **30**, drives shaft **32** to drive other parts of the mechanism as hereinafter described. Shaft **26** also through worm gear **13** and worm gear **11** drives drum **12** mounted on shaft **9**.

The rolls **16** and **18** are hollow and oil is fed therein through delivery tubes **34** from an oil container **36** by a pump **38**. This pump may be driven by gearing **40** from shaft **32** as shown. The oil which enters the rolls **16** and **18** passes outwardly through their foraminous peripheries and through absorbent peripheral facing thereon so that oil is delivered to both surfaces of the gelatin band.

As shown in Fig. 2 two gelatin bands are formed and oiled as described. These two bands pass over guides **42** and elevator rolls **44** arranged at the top of the machine and are advanced along converging paths upon opposite sides of a feeder head **46** between die rolls **48** (see Figs. 2 and 4). This driving mechanism is shown more clearly in Fig. 3.

Gear 60 drives shaft 50 through pinion 52 and in Fig. 1 this shaft 50 is directly in the rear of shaft 32. This shaft 50 drives the die rolls 48 through gears 54, 56 and 58. Each die roll shaft 60 is provided with a gear 58 and one gear 58 drives the other. The two die rolls are counterparts and one operates upon one band and the other upon the other band. Capsules are formed and filled as the gelatin bands 15 pass over the feeder head and between the die rolls and the juxtaposed bands pass downwardly as shown in Figs. 2 and 4 as a single double band 17.

The feeder head indicated generally in Fig. 2 as 46 comprises a casing or body having complementary arcuate faces which substantially conform to the curvature of the die rolls 48 as shown.

This feeder head is universally supported so as to position itself upon the gelatin bands passing over the die rolls so that the bands are held firmly against the rolls and against the arcuate faces of the head by the weight of the head. Pins 76 carried by brackets 78 supported by the framework of the machine afford a limit to the floating movement of the head but permit the head to float freely within its required limits. The head is adapted to position itself rockably, tiltably, and vertically, that is universally, with respect to the bands. This insures that the arcuate faces of the feeder head will closely engage and snugly hold each band to its roll notwithstanding minor variations in thickness of the bands as regards each band and also with respect to each other.

The fluid medicament or the like—and wherever the term "fluid" is employed it is intended to include any suitable material which will flow, such as a paste, jelly, liquid, etc.—with which the capsules are to be filled is contained within a supply tank 80. This tank contains a multiple pump driven from shaft 81 in synchronism with the functioning of the machine that forms the capsules so that at the proper intervals the fluid is impelled through conduits 82, which conduits are provided in such number as desired depending upon the number of outlets through which fluid is impeled from the feeder head onto the bands. The feeder head is cored out providing a passageway which leads to outlets through the arcuate faces of the head adjacent its tip. Through these outlets the fluid discharges onto the adjacent surfaces of the gelatin bands as they pass thereover.

The die rolls, which are substantial counterparts, are hollow and each is provided with a plurality of die recesses or cavities. Each die roll holds its gelatin band snugly against the adjacent arcuate face of the feeder head and the content substance is deposited through the feeder head against that portion of the adjacent face of the band which overlies a capsule cavity in the roll, all as described in my application Serial No. 44,017. The die rolls are so shaped about the capsule forming cavities that when the rolls come together against the two plastic bands filled capsules are formed and sealed.

As each die recess of the roll comes into position opposite a discharge outlet of the feeder head the mechanism is so synchronized in its functioning that filling fluid is impelled onto the band deforming the same under the pressure of the fluid delivered and stretching this selected area of the band into the die recess as shown. The fluid fills the cavity thus formed against the resistance of the stretched gelatin and the die roll holds the band snugly against the arcuate face of the feeder head around said deformed area so that leakage of the fluid content therefrom or admission of air thereto is prevented.

The bands travel continuously and each band with its filled cavities moves along into convergence with the cooperating band which is likewise provided with corresponding cavities similarly filled. The two bands come together between the die rolls with the filled cavities brought into registration. The bands are pressed together around the filled cavities forming a unitary capsule around the fluid content of each mating pair of cavities. The die rolls are so formed that the filled capsules are severed from the remainder of the plastic bands or sheets.

These filled capsules 19 are then stripped from the band by the stripper rolls 62 rolling outwardly thereover and falling upon the collector chute 64 for discharge into a collector.

These stripper rolls 62 are driven in a direction counter to the direction of travel of the dual band 17 and strip the capsules 19 therefrom. The dual band with the filled capsules removed now passes to a suitable collector, not shown, for salvage. To assist in drawing the juxtaposed gelatin bands there is provided a pair of cooperating drag rolls 66. The stripper rolls are driven from shaft 50 by gear and pinion 68 and 70, respectively. The drag rolls 66 are driven from the same shaft by gear and pinion 72 and 74, respectively. Note Fig. 3.

The stripper rolls are so rotatably driven that one roll is driven at a greater rate of speed than the other to facilitate the kicking out of the filled capsules. The filled capsules kicked out of the band fall upon collector delivery chutes 64 for discharge into a suitable receptacle, not shown.

What I claim is:

1. Mechanism for removing capsules from an advancing band of capsule forming material in which the capsules have been formed and substantially detached therefrom comprising a pair of stripper elements engaging opposite sides of the advancing band, at least one of said stripper elements being a roller rotatably driven counter to the direction of travel of the band.

2. In apparatus of the character described comprising mechanism for supporting and advancing a pair of adhesively juxtaposed bands of capsule forming material as a dual band carrying within itself capsules formed therefrom but substantially detached from the band, capsule stripping mechanism comprising a pair of stripper elements engaging opposite sides of said advancing band, each of said elements being a rotatably supported roller driven counter to the direction of the advance of the band, one of said rollers being driven at a greater rate of surface speed than the other roller.

3. In apapratus of the character described comprising mechanism for supporting and advancing a band of capsule forming material carrying within the band capsules formed therefrom but substantially detached from the band, stripper rolls engaging opposite surfaces of the band, and mechanism driving said stripper rolls rotatably counter to the direction of travel of the band and adapted to drive one stripper roll at a greater rate of surface speed than the other stripper roll.

ROBERT P. SCHERER.