United States Patent [19]

Evans

[11] **3,854,163**

[45] **Dec. 17, 1974**

[54] **LIQUID-VACUUM GENERATOR FOR USE WITH TWO CHAMBER CLEANING NOZZLE**

[76] Inventor: **James King Evans,** 2601 Kutztown Rd., Reading, Pa. 19605

[22] Filed: **Sept. 12, 1973**

[21] Appl. No.: **396,501**

[52] **U.S. Cl.** **15/321,** 55/216

[51] **Int. Cl.** **A47l 7/00**

[58] **Field of Search** ..... 15/302, 320, 321, 327 R, 15/353; 55/417, 216, 276, 319, 467

[56] **References Cited**

UNITED STATES PATENTS

3,056,994	10/1962	Noble	15/321
3,308,609	3/1967	McCulloch et al.	15/327 R
3,343,199	9/1967	Nolte	15/321
3,775,053	11/1973	Wisdom	15/302
R26,950	9/1970	Hays	15/321

Primary Examiner—Bernard Nozick

Attorney, Agent, or Firm—John C. Fox

[57] **ABSTRACT**

A compact liquid - vacuum generator for use with a two chamber cleaning nozzle in rug and upholstery cleaning comprises a vacuum unit and a liquid unit, which may be transported and stored seperately, but which snap together during use to form a single operating assembly.

2 Claims, 1 Drawing Figure

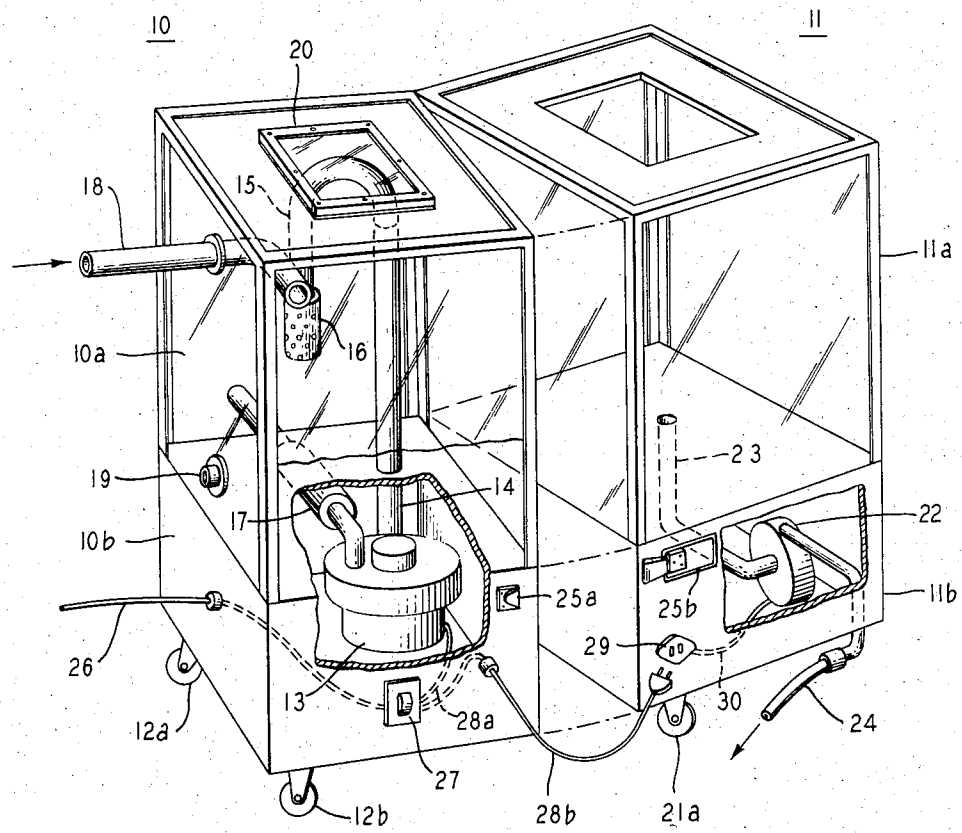

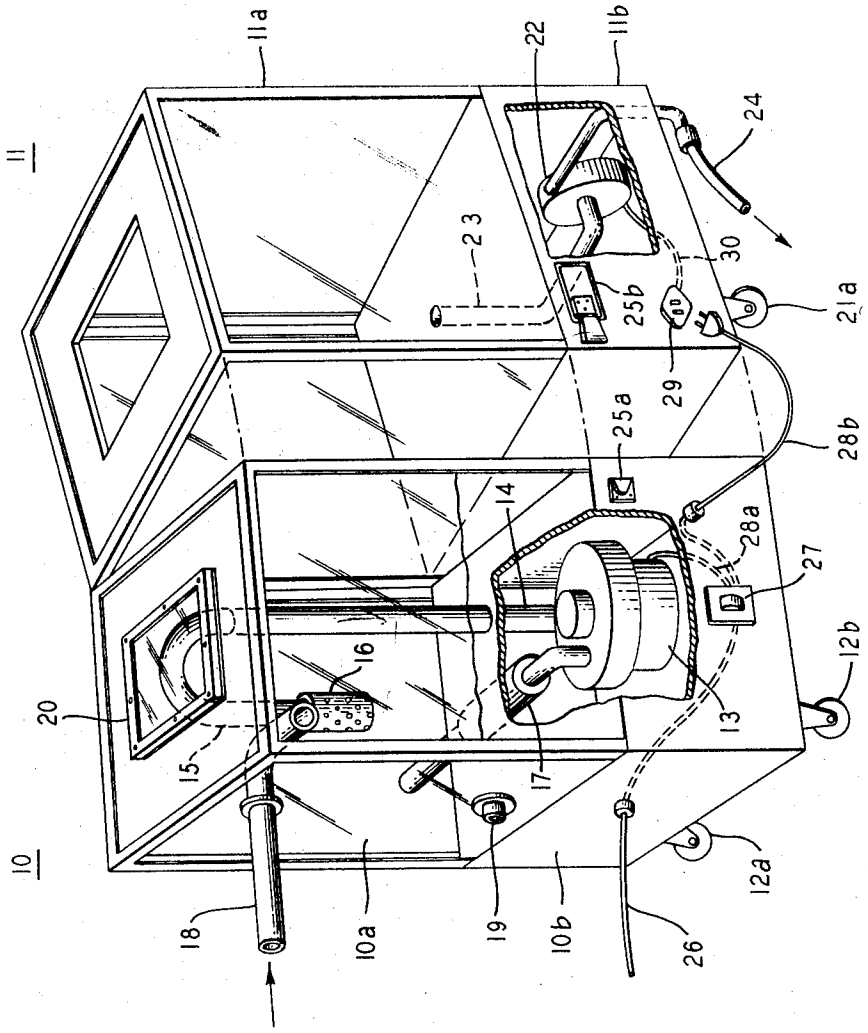
11
11a
22
11b
24
23
30
25b
21a
29
25a
28b
14
28a
27
12b
16
20
13
15
17
12a
18
10a
19
10b
26
10

LIQUID-VACUUM GENERATOR FOR USE WITH TWO CHAMBER CLEANING NOZZLE

BACKGROUND OF THE INVENTION

This invention relates to a liquid - vacuum generator for use with a two chamber cleaning nozzle in the cleaning of rugs, carpets, and upholstery, and more particularly to such a generator comprising seperably vacuum and liquid units.

The heated liquid - vacuum generator for use with a two chamber cleaning nozzle in rug, carpet and upholstery cleaning has come into fairly widespread use commercially within the past several years, due to its ability to more thoroughly clean piled fabrics than the more conventional vacuum cleaners and rug shampooers. Typical of such generators is the one described in the F. E. Hays U.S. Pat. No. 3,262,146. This generator employs two tanks positioned on a portable housing, a first liquid tank for supplying cleaning solution to the nozzle, and a second vacuum tank for collecting spent solution and dirt. The housing contains liquid and vacuum pumps, a liquid heater, a vacuum exhaust silencer and power supplies. The vacuum tank is evacuated through a standpipe connected to the vacuum pump.

The fact that two tanks are required, and that these tanks must be of sufficient size to contain a convenient amount of cleaning solution, together with the need for related equipment such as pumps, motors, etc., give rise to inherent bulkiness and seriously impair its portability.

SUMMARY OF THE INVENTION

A compact liquid - vacuum generator of use with a two chamber cleaning nozzle in rug and upholstery cleaning comprises a vacuum unit and a liquid unit, which may be transported and stored seperately, but which are joined together during use to form a single operating assembly.

For mechanical stability in assembled form, the units are box shaped and of approximately equal dimensions in a preferred embodiment.

The vacuum and liquid tanks are preferably made of a light, strong material, which may also be transparent in order that the solution levels in the tanks may easily be monitored during operation.

BRIEF DESCRIPTION OF THE DRAWING

The FIGURE is a perspective view, partly cut away, of one embodiment of the invention, showing a liquid - vacuum generator with the liquid and vacuum units partly assembled.

DETAILED DESCRIPTION OF THE INVENTION

Referring now to the FIGURE, there is shown one embodiment of the invention comprising vacuum unit **10** and liquid unit **11.** Vacuum unit **10** comprises vacuum tank **10***a*, preferably of a transparent material such as polycarbonate, but could be of other light strong material such as aluminum, and portable housing **10***b*, the portability provided by three castors **12,** only two of which, **12***a* and **12***b*, are shown. Housing **10***b* contains vacuum blower **13,** the inlet side of which is connected to standpipe **14,** which extends through the top of housing **10***b* into the vacuum tank **10***a*. A u-shaped connector **15** is attached to the top of standpipe **14** and a perforated enclosure **16** is attached to the open end of connector **15.** The enclosure **16** contains

a float, not shown, to form a float valve which operates as a safety mechanism in a manner to be described. The exhaust side of blower **13** is connected to silencer **17,** which exhausts through the side of housing **10***b*. Vacuum inlet **18** enters the vacuum tank **10***a* near the top of the tank, and turns at approximately a right angle to the entrance direction. Sealed lid **20** permits access to the interior of the tank for cleaning or repair.

The cleaning solution unit **11** comprises solution tank **11**a and portable housing **11**b. Tank **11**a has an opening in the top to admit fresh cleaning solution, and is preferably of a transparent material such as polycarbonate, but could be of other light, strong material such as aluminum. The housing is supported by three castors **21** only one of which, **21***a*, is shown. In operation, cleaning solution is fed to liquid pump **22** in the housing through solution inlet line **23** opening into the bottom of tank **11**a, and pumped through solution supply line **24** to the solution chamber of the cleaning nozzle, not shown. A detailed disclosure of the structure and operation of the cleaning nozzle may be found in U.S. Pat. No. 3,262,146. Tank **10***a* is evacuated through standpipe **14.** The perforated enclosure **16** containing the float prevents backflow of spent cleaning solution into standpipe **14** and thence into blower **13,** by allowing the float to rise with solution and seal the opening. The spent solution may then be drained through opening **19** at the end of the cleaning operation.

Power is supplied to the units from lead **26,** through switch **27** mounted on the outside of vacuum housing **10***b*. Leads **28***a* and **28***b* from switch **27** connect respectively to the vacuum blower and a receptacle **29** mounted on the outside of the solution housing **11**b. Receptacle **29** is connected to the the solution housing **11**b. Receptacle **29** is connected to the liquid pump **22** by lead **30.**

The vacuum and solution units are attached by releasable spring clamps on opposite sides of the housings **10***b* and **11***b*, only one pair of which, **25***a* and **25***b*, are shown in the FIGURE released for illustrative purposes to allow seperation of the forward portions of the respective units. The other pair, not shown, remain clamped to hold the rear inside vertical edges of the units in releasable contact. In operation, both pair are clamped together, while for easy transporting and storage, both of the clamps are simply released to separate the units, and lead **28***b* is disconnected from receptacle **29.**

The housing may also contain a solution heater connected to the pump outlet, to obtain heated cleaning solution. Such heated solution may be preferred for cleaning heavily soiled items, although warm solutions obtained with household tap water have been found satisfactory for most cleaning jobs.

The invention has been described in terms of a preferred embodiment. However, it is to be understood that variations which rely on the teachings herein, and which are within the skill of the art to effect, form a part of this invention.

What is claimed is:

1. A two tank liquid - vacuum generator for use with a two chamber cleaning nozzle comprising:

a first vacuum unit comprising;

a first housing,

vacuum means having an intake and an outlet, mounted within the first housing,

a vacuum tank mounted on the first housing,

a standpipe extending upwardly from the bottom of the vacuum tank,

a vacuum line communicating the intake side of the vacuum means with the lower end of the standpipe,

a vacuum inlet having one end thereof extending inwardly through the side of the vacuum tank near the top of the vacuum tank in the vicinity of the top of the standpipe, and the other end thereof formed for releasable connection to the cleaning nozzle,

a float valve attached to the top of the standpipe,

A second liquid unit comprising;

a second housing,

a liquid pump having an intake and an outlet, mounted within the second housing,

a liquid tank mounted on the second housing,

a liquid supply line extending from the bottom of the liquid tank to the intake side of the liquid pump, and

a liquid tube having one end thereof communicating with the pump and the other end thereof formed for releasable connection to the cleaning nozzle, and

means for releasably joining the vacuum unit and liquid unit to form the generator.

2. The generator of claim **1** in which the joining means comprises at least two releasable spring clamps, mounted on opposite sides of the first and second housings.

* * * * *