Feb. 15, 1944. G. M. GIANNINI 2,341,539

LOUDSPEAKING TELEPHONE SYSTEM

Filed Nov. 14, 1941 5 Sheets-Sheet 1

Fig. 1

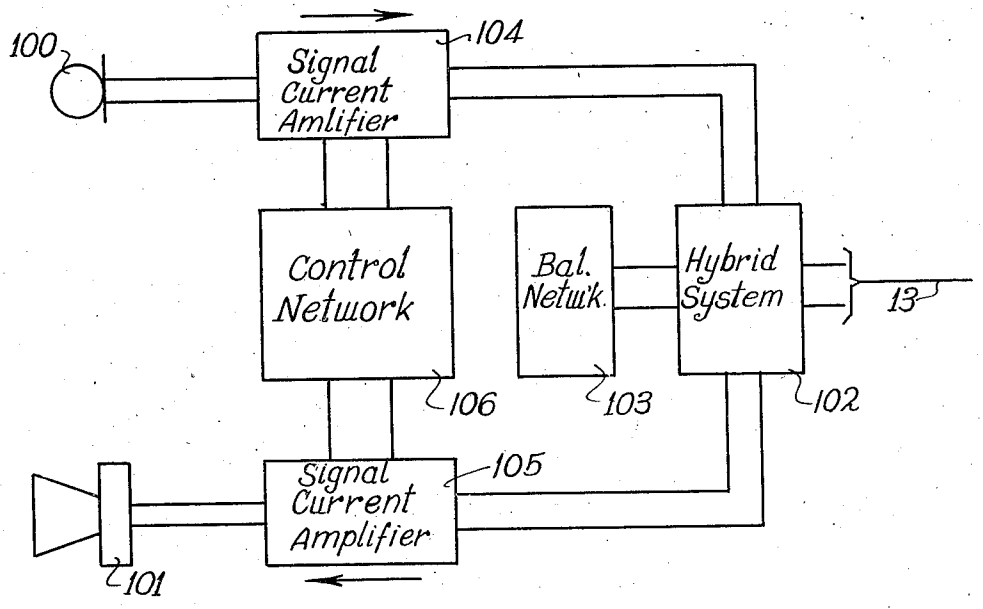

East Station 10

INVENTOR
Gabriel M. Giannini
BY
Davis, Lindsey, Smith & Shonts
ATTORNEYS

Feb. 15, 1944. G. M. GIANNINI 2,341,539

LOUDSPEAKING TELEPHONE SYSTEM

Filed Nov. 14, 1941 5 Sheets-Sheet 2

Fig. 2

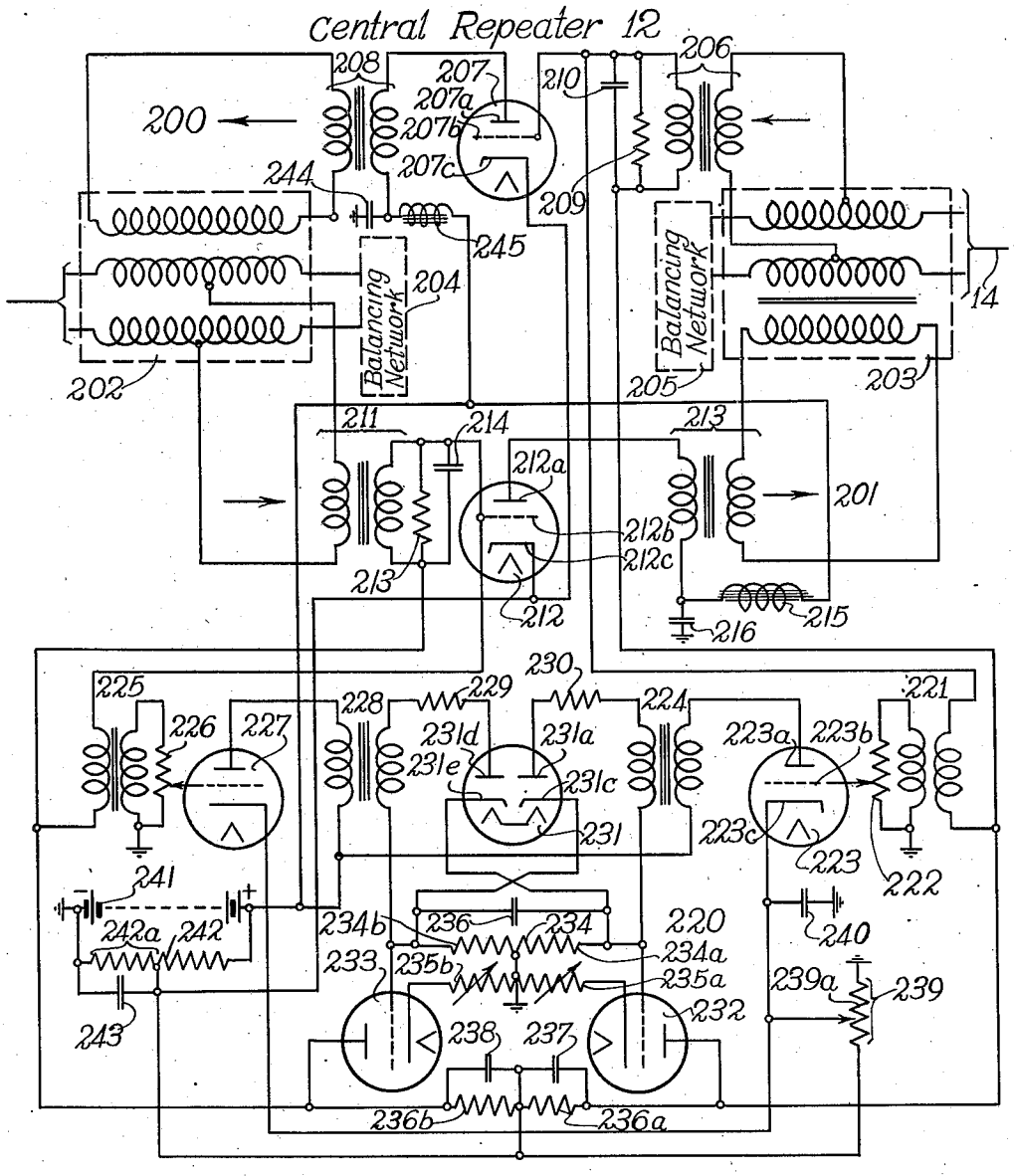

INVENTOR
Gabriel M. Giannini

BY
Davis, Lindsey, Smith & Shorts
ATTORNEYS

Feb. 15, 1944. G. M. GIANNINI 2,341,539

LOUDSPEAKING TELEPHONE SYSTEM

Filed Nov. 14, 1941 5 Sheets-Sheet 3

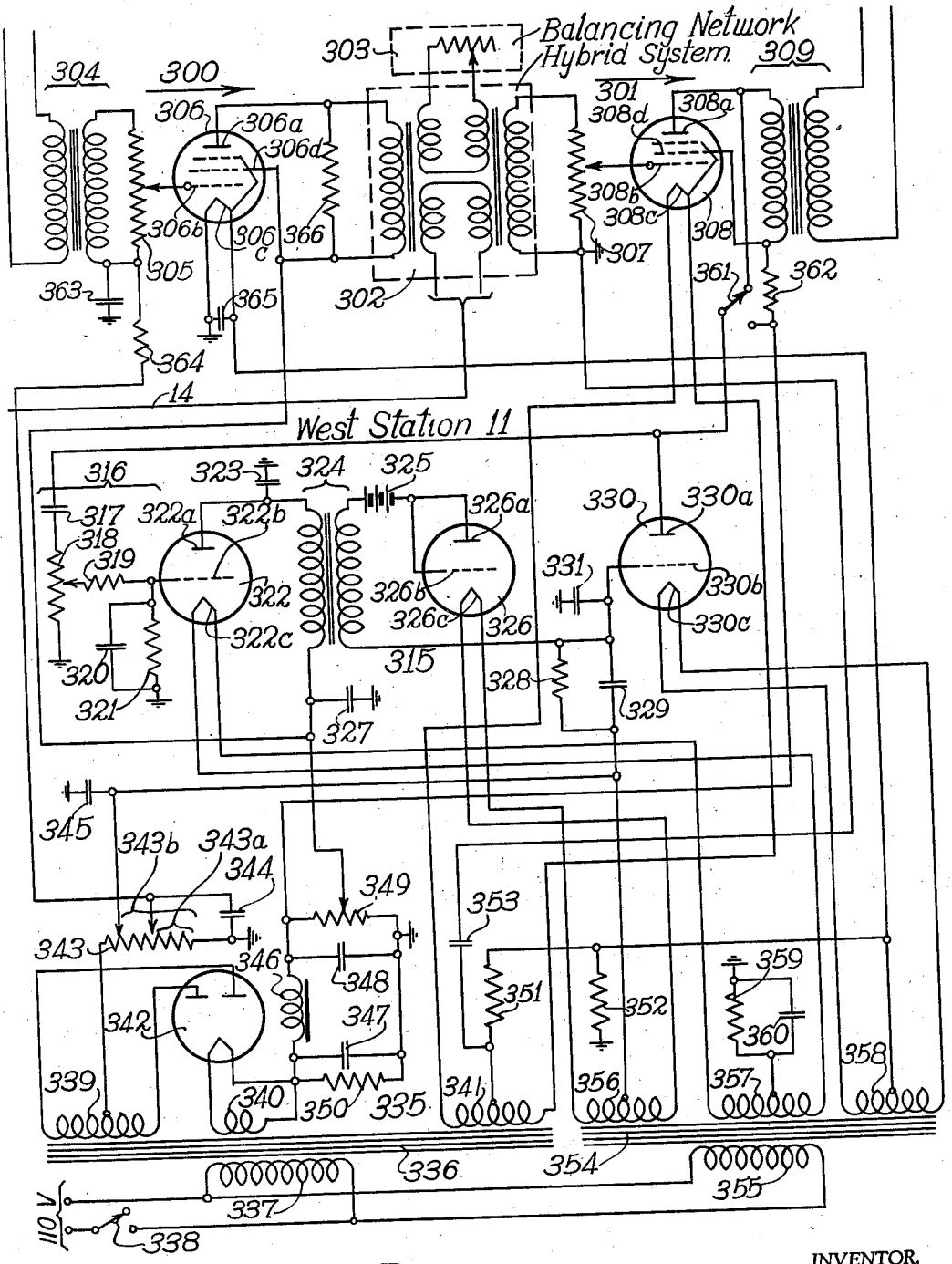

Fig. 3

INVENTOR.
Gabriel M. Giannini
BY Davis, Lindsey, Smith & Shorts
Attorneys

Feb. 15, 1944. G. M. GIANNINI 2,341,539

LOUDSPEAKING TELEPHONE SYSTEM

Filed Nov. 14, 1941 5 Sheets-Sheet 4

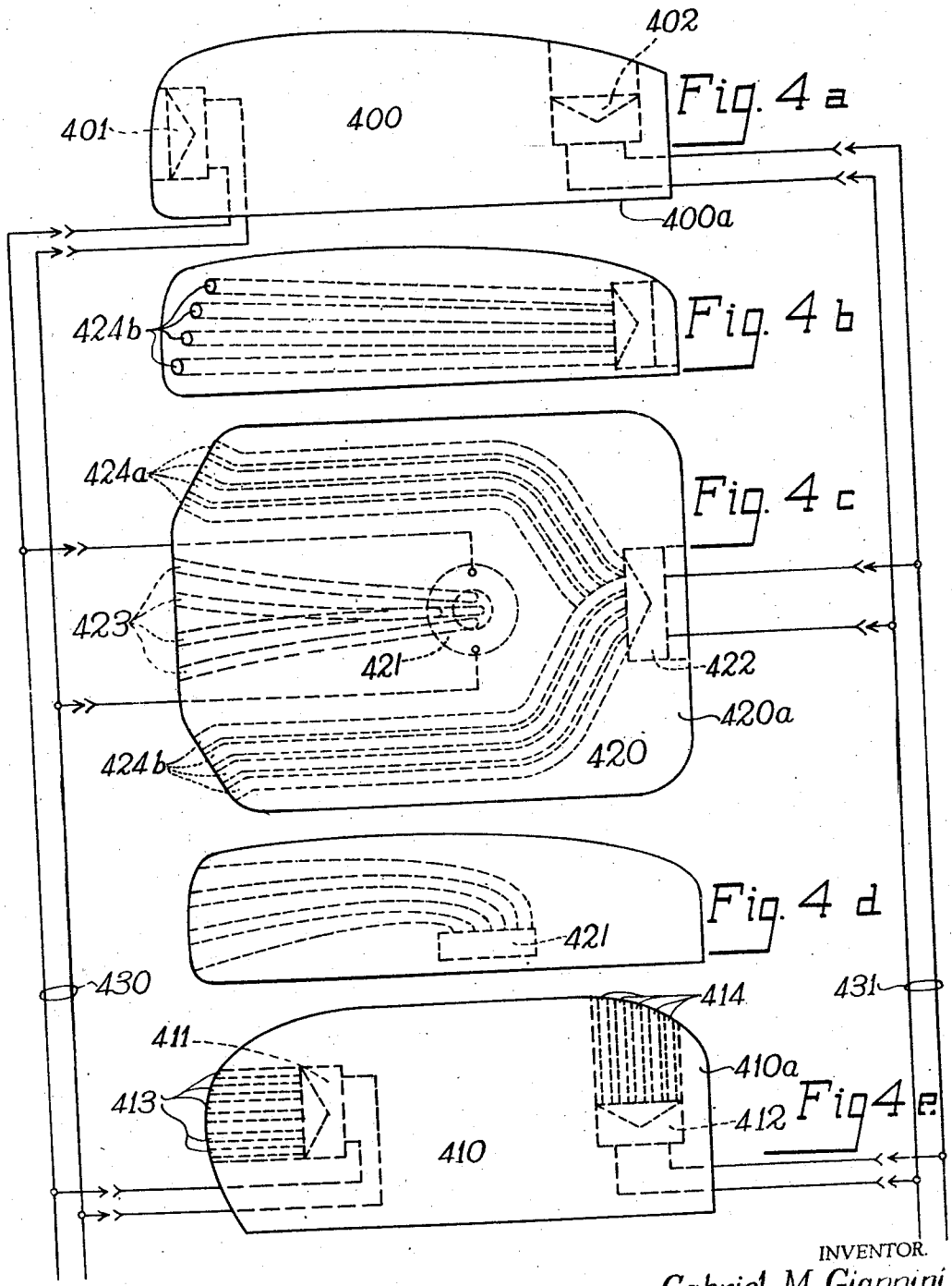

Fig. 4 a

Fig. 4 b

Fig. 4 c

Fig. 4 d

Fig. 4 e

INVENTOR.
Gabriel M. Giannini
BY Davis, Lindsey, Smith & Shonts
Attorneys.

Feb. 15, 1944. G. M. GIANNINI 2,341,539

LOUDSPEAKING TELEPHONE SYSTEM

Filed Nov. 14, 1941 5 Sheets-Sheet 5

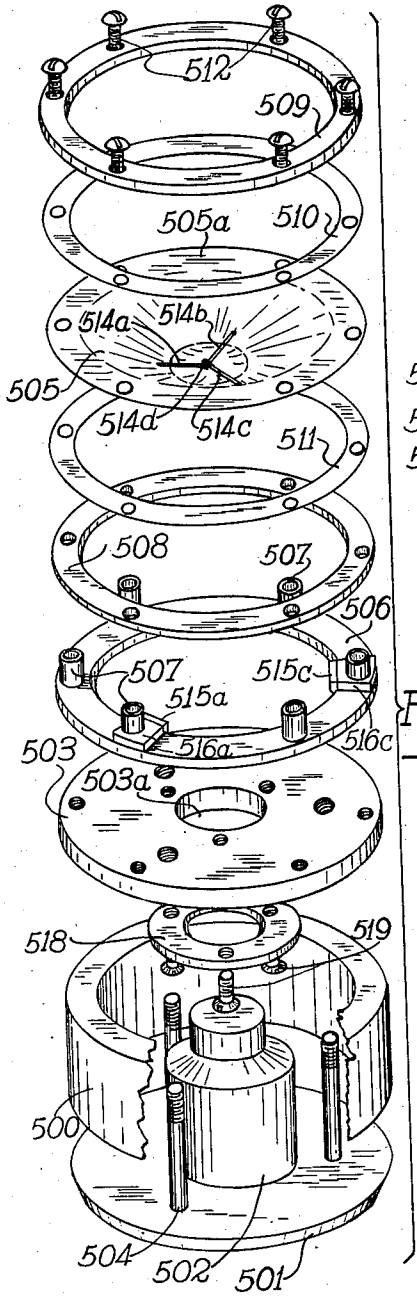

Fig. 6

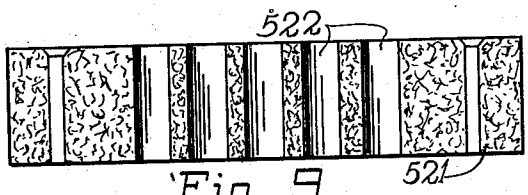

Fig. 9

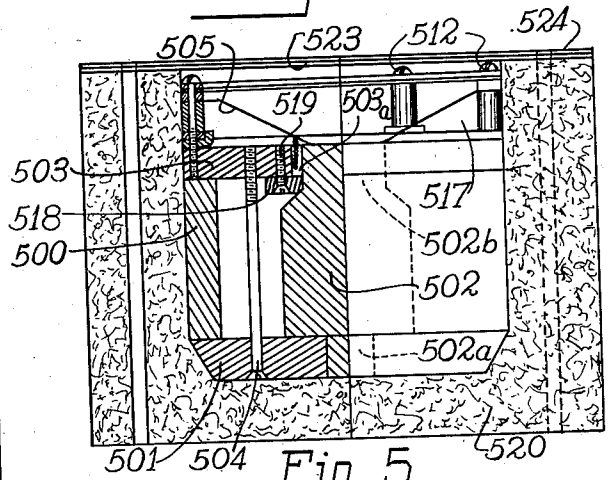

Fig. 5

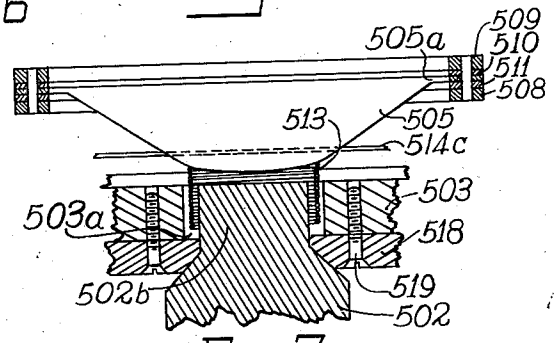

Fig. 7

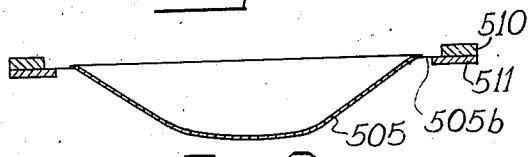

Fig. 8

INVENTOR.
Gabriel M. Giannini
BY Davis, Lindsey, Smith & Shonts
Attorneys

Patented Feb. 15, 1944 2,341,539

UNITED STATES PATENT OFFICE

2,341,539

LOUD-SPEAKING TELEPHONE SYSTEM

Gabriel M. Giannini, North Hollywood, Calif., assignor, by mesne assignments, to Automatic Electric Laboratories, Inc., Chicago, Ill., a corporation of Delaware

Application November 14, 1941, Serial No. 419,165

17 Claims. (Cl. 179—1)

The present invention relates to loudspeaking telephone systems and, more particularly, to improvements in methods and apparatus for increasing the stability of operation of systems of this character.

Aside from the so-called manually controlled "push-to-talk" and "push-to-listen" arrangements, loud-speaking intercommunicating systems of the character mentioned usually take either of two forms. In one form of the system, as exemplified by Patent No. 2,208,160, Harold J. McCreary, granted July 16, 1940, separate transmitting and receiving channels, each provided with signal current amplifiers, are utilized in the transmission of signal currents between two stations arranged for loudspeaking service. In the other type of system, as exemplified by Patent No. 2,224,477, Roswell H. Herrick, granted December 10, 1940, a single two-conductor channel is utilized for transmission in either direction, each station connected to the channel usually being provided with transmitting and receiving amplifiers and a hybrid system for obtaining side tone suppression in the station circuit. In either type of system, the problem of preventing the acoustical coupling between the transmitting and receiving elements from setting up an oscillatory condition in the system is difficult to obviate. Thus, in the two channel arrangement, the acoustical coupling at the two ends of the channels provides a closed signal transmission circuit which includes the two signal amplifiers. This closed circuit tends to oscillate when the gain through the amplifiers exceeds the acoustical and electrical losses of the circuit. Again, in the two-conductor single channel arrangement, each substation network effectively comprises a closed circuit which includes the transmitting and receiving amplifiers, the acoustical coupling between the microphone and loudspeaker, and the electrical coupling through the hybrid system. This closed circuit will likewise oscillate when the gain through the amplifiers exceeds the electrical and acoustical losses of the closed station circuit. The above-noted common characteristic of the two systems places a definite limitation on the amount of gain which may be introduced into the signal transmission channels before singing or howling will occur, and hence places a limitation on the volume at which received speech currents may be transmitted and reproduced. Various so-called voice operated switching arrangements have been devised for eliminating this difficulty. In at least one system of this general character, facilities are provided for normally operating both the transmitting and receiving channels at a sub-normal gain setting and for inversely varying the gains of the signal amplifiers in response to signal current transmission, so that the gain of the channel in use is raised to a normal value and the gain of the inactive channel is decreased by at least a corresponding amount. While this and like arrangements may be designed satisfactorily to eliminate singing, it gives rise to ancillary problems. For example, with the gain of the inactive channel at an extreme sub-normal value, conversation "break ins" can only occur at a very low transmission level. Also, the problem of preventing speech "clipping" is difficult to obviate.

It is an object of the present invention, therefore, to provide an improved system of the character described wherein the transmitting and receiving elements provided at each station of the system are acoustically decoupled to the greatest extent possible in order to raise the permissible level of signal current gain through the transmission channel in use, and wherein the system is so arranged that stability is maintained with an attendant satisfactory gain in the active channel and without an objectionble decrease in the gain of the inactive channel.

According to another object of the invention, the acoustical coupling between the transmitting and receiving elements at each station of the system is minimized by providing a predetermined spacing between the acoustically associated elements, which spacing is determined by the point in the combined frequency response characteristic of the two elements at which maximum coupling between the elements tends to occur.

According to a further object of the invention, the loudspeaker and microphone elements of the system are of improved construction, characterized by an absolute minimum of mechanical or conductive coupling between the associated elements at each station, and utilize diaphragms which are so proportioned as to size that the acoustical coupling between associated elements is further minimized.

According to a still further object of the invention, sound transmission from the loudspeaker or receiving element at each station is effected along a substantially vertical path, while sound input to the associated microphone is effected along a substantially horizontal path, thereby further to enhance the acoustical impedance between the two elements.

According to still another object of the inven-

tion, directional sound wave transmission from the loudspeaker at each station is utilized as a vehicle to minimize sound wave reflection and refraction into the response zone of the associated microphone during operation of the loudspeaker, thereby further acoustically to decouple the two elements.

It is another object of the invention to provide an improved method of operating the system, whereby the two transmission channels are normally operated at the maximum gain consistent with stability of the system, and the inverse changes in the gains of the two channels which occur during signal current transmission are limited to a narrow range just sufficient to preserve the stability of the system.

In accordance with another object of the invention, the operation of the gain control apparatus is prevented until the amplitude of the signal input to the active channel attains a predetermined value which exceed the normal noise current level.

According to still another object of the invention, the gain control apparatus for the signal amplifiers of the two channels is provided with a frequency discriminating network which favors the frequencies in the lower portion of the operating frequency range, within which the major portion of the sound energy developed by the human voice is generated.

The invention, both as to its organization and method of operation, together with further objects and advantages thereof, will best be understood by reference to the specification taken in connection with the accompanying drawings in which Figs. 1, 2, and 3 illustrate the circuit arrangement of an improved system having incorporated therein the features of the invention briefly referred to above; Fig. 4*a* illustrates one improved loudspeaker-microphone arrangement which may be used at each of the stations of the system; Figs. 4*b* 4*c* and 4*d* illustrate a modified arrangement of the loudspeaker-microphone unit; Fig. 4*e* illustrates another modification of the loudspeaker-microphone unit; and Figs. 5 to 9, inclusive, illustrate the details of the transmitting and receiving elements provided at each of the substations of the system.

Referring now more particularly to Figs. 1, 2, 3 and 4 of the drawings, the improved loudspeaking intercommunicating system there illustrated comprises, in general, an east station 10 and a west station 11 which are interconnected by a pair of lines 13 and 14 having a central repeater 12 connected therebetween. This repeater may be provided at a central point in the system and may be used to stabilize the transmission level over the two connected lines 13 and 14. Briefly described, this repeater comprises an east-west amplifier 201, a west-east amplifier 200, a pair of hybrid systems 202 and 203, balancing networks 204 and 205 individual to the hybrid coils and respectively operative to balance the line impedances of the lines 13 and 14, and a signal operated control network 220 which is operative to control the gain of the two amplifiers 200 and 201 in accordance with the direction of signal current transmission over the lines 13 and 14.

More specifically considered, the west-east amplifier 200 comprises a coupling transformer 206 having its input winding connected to the signal transmitting terminals of the hybrid system 203, and its output or secondary winding coupled to the input electrodes 207*b* and 207*c* of the three-electrode amplifier tube 207. The output electrodes 207*a* and 207*c* of this tube are coupled to the signal input terminals of the hybrid system 202 through a coupling transformer 208. The opposite or east-west amplifier 201 similarly comprises a coupling transformer 211 having its primary winding connected to the signal transmitting terminals of the hybrid system 202, and its secondary winding coupled to the input electrodes 212*b* and 212*c* of the three-electrode amplifier tube 212. The output electrodes 212*a* and 212*c* of this tube are coupled to the signal input terminals of the hybrid system 203 through a coupling transformer 213. Preferably, the amplifier tubes 207 and 212 are of the well-known 6C5 type, utilizing indirectly heated cathodes and characterized by a comparatively high amplification factor.

The control network 220, as indicated above, is provided for the purpose of increasing the gain of the signal amplifier 200 or 201 which is in use during signal current transmission over the two lines 13 and 14, and for concurrently effecting a corresponding decrease in the gain through the signal amplifier included in the inactive channel. Briefly described, this network comprises a three-electrode amplifier tube 223 having its input electrodes 223*b* and 223*c* coupled to the input circuit of the west-east channel amplifier tube 207 through an adustable voltage dividing resistor 222 and a coupling transformer 221. The output electrodes of the tube 223 are coupled to one rectifying section 231*a*, 231*c* of a duplex diode 231, through a coupling transformer 224. The other section 231*d*, 231*e* of the vacuum tube 231 is coupled to the input circuit of the east-west channel amplifier tube 201 over a signal current path which includes the coupling transformer 228, the three-electrode amplifier tube 227, the adjustable voltage dividing resistor 226 and the coupling transformer 225. The duplex diodie 231 functions to rectify signal currents appearing across the secondary windings of the coupling transformers 224 and 228, respectively, and to impress the rectified voltages upon the input electrodes of the two direct current amplifier tubes 232 and 233 in opposite senses. Thus, it will be noted that the diode section 231*a*, 231*c* is included in a closed direct current circuit which includes the space current path between these electrodes, a resistor 230, the secondary winding of the transformer 224, and a resistor 234. The other two electrodes 231*d*, 231*e* of the duplex diode 231 are similarly included in a circuit which includes the resistor 234, the secondary winding of the transformer 228 and a resistor 229. A smoothing condenser 236 is connected in shunt with the resistor 234 in order to smooth out alternating components of the voltage developed across this resistor and to determine the time constant of the control circuit. The voltages developed across the two halves 234*a* and 234*b* of the resistor 234 are impressed in opposite senses across the input electrodes of two three-electrode control tubes 232 and 233, respectively, through the adjustable cathode biasing resistors 235*a* and 235*b*, respectively. The output circuit of the tube 232 includes a load resistor 236*a* which is shunted by a smoothing condenser 237 and is so connected that the voltage developed thereacross is impressed as a bias voltage between the input electrodes of the west-east amplifier tube 207. More particularly, the resistor 236*a* is connected to the control grid 207*b* of the tube 207 over a path which includes the secondary winding of the transformer 206. This winding is bridged by a terminating net-

work which comprises the shunt-connected resistor 209 and condenser 210. Similarly, the output circuit of the other tube 233 includes a biasing resistor 236b which is shunted by a smoothing condenser 238 and is connected through the secondary winding of the coupling transformer 211 to the control grid 212b of the east-west amplifier tube 212. This secondary winding is also bridged by a terminating network which includes the shunt-connected resistor 213 and condenser 214. Preferably, the control and amplifier tubes 223, 227, 232 and 233 are of the commercial type 6C5, and the duplex diode is of the 6H6 type.

Anode voltages are impressed upon anodes 207a and 212a of the two signal amplifier tubes 207 and 212 from the voltage source 241, over paths which respectively include the signal current choke coils 245 and 215. These coils and the source 241 are by-passed for signal currents by the condensers 244 and 216. In this regard it will be noted that the cathodes 212c and 207c of the two amplifier tubes are connected to the tapped point along the voltage dividing resistor 242 in order to provide the required potential on these cathodes. The voltage of the source 241 is also positively applied to the anodes of the two tubes 223 and 227 through the primary windings of the coupling transformers 224 and 228, respectively. The direct voltage across the section 242a of the resistor 242 is also positively applied to the anodes of the two control tubes 232 and 233 through the resistors 236a and 236b, respectively. The cathodes of the two tubes 223 and 227 are positively biased with respect to their associated control electrodes by the voltage drop across the variable section 239a of the voltage divider 239, which divider is bridged across the section 242a of the resistor 242.

Referring now more particularly to the equipment provided at the east station 10, this equipment is illustrated in Fig. 1 of the drawings as comprising a transmitting element in the form of a microphone 100, a receiving element in the form of a loudspeaker 101, a hybrid system 102, and a balancing network 103 which is provided to balance the impedance of the line 13 so that signal energy transfer between the transmitting and receiving channels of the station through the hybrid system is reduced to a minimum. The station equipment further comprises a transmitting amplifier 104, a receiving amplifier 105, and a control network 106, which functions to control the signal current gain through the two amplifiers in the manner more fully pointed out hereinafter.

In general, the arrangement of the equipment provided at the west station 11 is identical with that provided at the east station 10 and, accordingly, only the details of the station 11 have been illustrated in the drawings. Briefly described, the equipment provided at the west station 11 includes one of the three loudspeaker-microphone units illustrated in Fig. 4 of the drawings, and the circuit equipment illustrated in Fig. 3 of the drawings. This circuit equipment comprises a transmitting amplifier 300 and a receiving amplifier 301 which are respectively coupled to the transmitting and receiving terminals of a hybrid system 302. A balancing network 303 of the adjustable resistive type is provided for balancing the impedance of the line 14 to minimize energy transfer between the transmitting and receiving channels of the station 11. For the purpose of controlling the gain of the two amplifiers 300 and 301 to preserve stability of the station circuit, a control network 315 is provided. The various anode and biasing voltages required for operation of the amplifier tubes and the tubes of the control network 315 are derived from a power pack indicated generally at 335.

More specifically considered, the transmitting amplifier 300 comprises a thermionic tube 306 of the well-known pentode type, having its input electrodes 306b and 306c coupled to one of the three microphones 401, 411 and 421, over a channel which includes an adjustable voltage dividing resistor 305, a condenser 363, a coupling transformer 304 and the cord conductors 430. The output electrodes of this tube are directly coupled to the input winding of the hybrid system 302, which is shunted by a resistor 366. The other signal amplifier 301 similarly comprises a thermionic tube 308 of the well-known pentode type, having its input electrodes 308b and 308c coupled to the receiving terminals of the hybrid system 302 through an adjustable voltage dividing resistor 307. The output electrodes of this tube may be coupled to the loudspeaker of any one of the three translating units 400, 410 and 420 in use, over a channel which includes the coupling transformer 309 and the cord conductors 431. The two tubes 306 and 308 are provided with cathodes 306c and 308c which are of the filamentary type, such that rapid changes in the electron emission of the cathodes is obtained in response to changes in the current traversing the cathodes.

The input and output terminals of the control network 315 are coupled to the receiving channel of the station circuit at a point just following the signal amplifier tube 308. Briefly described, this network comprises a signal amplifier tube 322 having its input electrodes 322b and 322c coupled to the output circuit of the amplifier 301 over a channel which includes the frequency discriminating circuit 316. This circuit, which comprises a coupling condenser 317, a loading condenser 320, a voltage dividing resistor 318 and two resistors 319 and 321, is designed to favor frequencies lying within the lower portion of the voice frequency range, and to discriminate against frequencies in the upper portion of this range. The output electrodes of the signal amplifier tube 322 are coupled through a coupling transformer 324 to the electrodes of a triode 326 which is connected to operate as a diode rectifier. A load resistor 328 shunted by a signal current by-pass condenser 329 is connected in circuit with the space current path of the tube 326, and the voltage developed thereacross is utilized to control the potential difference between the input electrodes 330b and 330c of the control tube 330. In order to prevent the control circuit 315 from effecting a change in the gain of either of the two channel amplifier tubes 306 and 308 when the signal input to the station 11 is below a predetermined value, a biasing battery 325 is provided in circuit with the tube 326. This battery functions to prevent the tube 326 from passing current until the signal input to the station exceeds the selected predetermined value.

The control tube 330 is provided with a space current path between its output electrodes 330a and 330c which may be connected in parallel with the space current path of the signal amplifier tube 308, and in series with a cathode biasing resistor 352. It will be apparent that with the space current path of the tube 330 shunting the output circuit of the amplifier tube 308, the signal current gain through the receiving amplifier 301

is varied directly in accordance with the resistance of the space current path through the tube **330**. It will also be noted that the cathode biasing resistor **352** is shunted by the cathode **306***c* of the transmitting amplifier tube **306**, whereby the electron emission of the tube **306** is controlled in accordance with the current traversing the space current path of the tube **330**. This cathode is shunted by a large condenser **365** which functions to by-pass the cathode for signal frequency currents.

Briefly considered, the power pack **335** comprises a voltage transformer **336** having a primary winding **337** which is arranged to be connected to a source of commercial frequency current through a manually operable switch **338** and is provided with a high voltage secondary winding **339**, a low voltage cathode heating winding **340**, and a low voltage cathode heating winding **341**. The power pack also includes a full wave rectifier tube **342** having its two anodes connected to the outer terminals of the high voltage winding **339**, and its cathode connected to a low resistor **349** through a filter network which comprises a series choke **346**, a pair of shunt connected filter condensers **347** and **348**, and a bleeder resistor **350**. The mid-point of the high voltage winding **339** is connected to the low voltage terminal of the load resistor **349** and to ground through a load resistor **343** which is tapped at two points to provide bias voltages for the two tubes **306** and **330**. Thus, the voltage of approximately 5.5 volts which is developed across the section **343***a* of the resistor **343**, during operation of the apparatus, is negatively applied to the control electrode **306***b* of the tube **306** over a path which includes the filter resistor **364** and the lower section of the voltage dividing or volume control resistor **305**. This section of the resistor **343** is shunted by an alternating current by-pass condenser **344** to prevent noise from being introduced into the signal amplifier **300** from the power pack. The voltage of approximately 18.5 volts which is developed across the section **343***b* of the resistor **343** during operation of the power pack **335**, is negatively applied to the control electrode **330***b* of the tube **330** over a path which includes the resistor **328**. This section of the resistor **343** and the resistor **328** are by-passed for alternating currents by the condensers **331** and **345**. The entire voltage of approximately 270 volts developed across the load resistor **349**, during operation of the power pack **335**, is positively applied to the anode **308***a* of the receiving amplifier tube **308** over a path which includes the resistor **362** and the primary winding of the coupling transformer **309**. This voltage is also positively applied to the screen electrode **308***d* of the tube **308** over a path including the resistor **362**. Depending upon the position of an on-off switch **361**, which is provided for rendering the control network **315** active or inactive as desired, this voltage is also either directly applied to the anode **330***a* of the tube **330** or is applied to this anode through the resistor **362** and the primary winding of the transformer **309**. A portion of the voltage developed across the load resistor **349**, i. e., approximately 110 volts, is positively applied to the anode of the signal amplifier tube **322** through the primary winding of the coupling transformer **324**, and to the anode of the transmitting amplifier tube **306** over a path which includes the resistor **366** and the signal input winding of the hybrid system **302** in parallel. This voltage is also directly applied to the screen electrode **306***d* of the transmitting amplifier tube **306**. A by-pass condenser **327** is connected in shunt with the portion of the resistor **349** from which the 110 volt anode potentials are derived, in order to prevent the alternating components of this voltage from being impressed upon the screen electrode **306***d* and the anodes **306***a* and **322***a*.

Cathode heating current is supplied to the cathode **308***c* of the receiving amplifier tube **308** from the low voltage winding **341** of the transformer **336**, it being noted in this regard that the mid-point of this winding is connected to ground over a path which includes the cathode biasing resistor **351** and the biasing resistor **352** in series, whereby the cathode **308***c* is normally maintained at a potential which is substantially positive with respect to its associated control grid **308***b*. This biasing path is by-passed for alternating currents by a shunt connected condenser **353**. Cathode heating currents are supplied to the cathodes of the three tubes **322**, **326** and **330** from the three low voltage windings **357**, **356** and **358** of a voltage step-down transformer **354**, this transformer being provided with a primary winding **355** which is connected in shunt with the primary winding **337** of the transformer **336**. More specifically, the low voltage winding **356** is connected to supply heating current to the cathode **326***c* of the tube **326** and is provided with a center tap which is connected to one terminal of the load resistor **328**. The low voltage winding **357** is connected to supply heating current to the cathode **322***c* of the tube **322** and is provided with a tapped center point which is connected to ground through a cathode biasing network which comprises a resistor **359** shunted by a signal current by-pass condenser **360**. The third low voltage winding **358** is connected to supply cathode heating current to the cathode **330***c* of the tube **330** and is provided with a tapped center point which is connected to ground through the cathode biasing resistor **352**.

As indicated above, any one of the three loudspeaker-microphone arrangements illustrated in Figs. 4*a*, 4*b*, 4*c*, 4*d* and 4*e* of the drawings may be used in conjunction with the circuit equipment shown in Fig. 3 of the drawings. The common purpose of the three arrangements is to minimize acoustical coupling between the loudspeaker and the microphone and thus reduce the tendency of the station circuit to oscillate and produce singing or howling. Briefly considered, the unit illustrated in Fig. 4*a* of the drawings comprises a microphone **401** which is arranged to be primarily responsive to sound waves transmitted thereto along a horizontal path, and a loudspeaker **402** which points upward and is arranged to transmit sound waves in a substantially vertical direction. These two translating devices are housed in a casing **400***a* which is provided with curved outer surfaces, and in order to minimize conductive or mechanical coupling between the two translating elements **401** and **402**, the casing **400***a* is filled with acoustical damping material, such, for example, as felt.

The loudspeaker-microphone arrangement illustrated in Fig. 4*e* of the drawings is in all respects similar to that shown in Fig. 4*a* of the drawings, except that directional characteristics have been imparted to the loudspeaker **412** and the microphone **411** through the provision of two sets of elongated sound transmission passages **414** and **413** of tubular form, which respectively communicate with the chambers adjacent the diaphragms of the two translating elements. In this arrangement, also, the loudspeaker **412** and the microphone **411** are housed in a casing **410***a* and

are surrounded by felt or other acoustical insulating material to minimize the conductive coupling therebetween. In the arrangement illustrated in Figs. 4*b*, 4*c* and 4*d*, the sound chamber adjacent the diaphragm of the loudspeaker **422** communicates with two sets of sound passages **424***a* and **424***b* which extend to the air surrounding the unit. These passages, at their outer ends, are flared away from each other so that the sound emitted therefrom is directed away from the zone intermediate the two sets of sound transmission openings. The transmitter element or microphone **421** is disposed between the two sets of sound passages **424***a* and **424***b* and is provided with a diaphragm which communicates with the air surrounding the unit through the elongated sound passages **423**. As best shown in Fig. 4*d* of the drawings, these passages are directed slightly downward to prevent sound reflected from the walls and ceiling of the room in which the unit is located from being transmitted to the diaphragm of the microphone **421**. The loudspeaker **422** and the microphone **421** are housed within a casing **420***a* which is filled with acoustical insulating material, such as felt, to minimize the conductive coupling between the two elements. If desired, the insulating material provided within the casing **420***a* may be compressed or molded, and the sound passages **423**, **424***a* and **424***b* may either be preformed therein during the molding process or may be cut in the formed block after the molding of the structure is completed. As an alternative to this arrangement, the two elements **421** and **422**, each including its own sound directing passages, may be constructed as separate units, and the two units may then be housed within the casing **420***a*. In the latter case, a suitable amount of acoustical insulating material should be provided around each of the two units in order to minimize the conductive coupling therebetween.

In the operation of the loudspeaker-microphone arrangement illustrated in Figs. 4*b*, 4*c* and 4*d* of the drawings, sound waves developed during operation of the loudspeaker **422** and transmitted through the sound passages **424***a* and **424***b*, diverge at the openings of these passages and are transmitted away from the zone in which sound is transmitted to the sound passages **423** which communicate with the diaphragm of the microphone **421**. By virtue of this arrangement, a minimum of the reproduced sound energy is fed back through the passages **423** to the air chamber adjacent the microphone diaphragm.

Further to consider the three embodiments of the microphone-loudspeaker units, it has been found that station transmitter-receiver combinations, in general, have a number of peaks in the combined frequency response characteristic thereof, which peaks represent particular frequencies at which maximum coupling between the receiver and transmitter obtains. In other words, signal currents having frequencies corresponding to the response characteristic peaks and reproduced by the receiver element, cause the maximum response of the associated transmitter element. It has also been observed that the acoustical coupling between the station transmitter and receiver elements is affected by the spacing between the sound transmitting and sound receiving openings which connect the movable diaphragms of the coupled elements with the surrounding air. More specifically, the coupling is greatest when the spacing between the sound transmitting and sound receiving openings of the two elements is of the order of one-half of the wave length representing the sound frequency under observation. Accordingly, when the openings of the sound transmitting and receiving elements are spaced apart by a distance equal to an odd number of quarter wave lengths of a particularly objectionable frequency, a minimum amount of acoustical coupling between the two elements and, hence, a maximum of system stability, are obtained. Usually the most objectionable peak in the combined frequency response characteristic of the transmitting and receiving elements occurs in the lower portion of the voice frequency range. For example, tests on a specific combination of elements have indicated a maximum combined response of the two elements at a frequency of the order of 600 cycles per second, which corresponds to a wave length, measured at ordinary room temperature, of approximately 22.3 inches. In this case a mean spacing between the sound transmitting and receiving openings of the loudspeaker and microphone, respectively, of approximately 5.6 inches may be used to obtain the maximum of acoustical attenuation between the two elements. Another factor which in part determines the acoustical coupling between the two translating elements **401** and **402**, for example, is the size of the diaphragm used in the loudspeaker **402**. In general, it may be stated that the smaller the loudspeaker diaphragm, the less the acoustical coupling between the loudspeaker and its associated microphone. In other words, a loudspeaker unit having a small effective diaphragm diameter is capable of producing a greater output per unit of diaphragm area without producing instability of the station network. More specifically, it has been found that if the effective diameter of the loudspeaker cone is made more than one-half the minimum wave length of the operating frequency range, the acoustical coupling between the loudspeaker and the microphone elements becomes difficult to control. In the system under consideration, a transmission band ranging from about 350 cycles per second to approximately 3300 cycles per second is utilized for voice current transmission. Accordingly, a loudspeaker is provided which is equipped with a diaphragm having an effective diameter of less than 6 centimeters.

The individual microphone and loudspeaker assemblies are of the electro-dynamic type and, preferably, each thereof is of the form illustrated in Figs. 5, 6, 7, 8 and 9 of the drawings. These figures illustrate a working embodiment of the assembly, and in Fig. 5 all parts are drawn to full size, scaled dimensions. In brief, the assembly there shown comprises a self-contained magnetic circuit which includes a permanently magnetized annular ring **500** formed of Alnico, a bottom plate **501**, a center pole piece **502** and a top plate **503**. The parts **501**, **502** and **503** are preferably formed of Allegheny Electric metal or other highly permeable magnetic material. The center pole piece **502** is provided with a lower portion **502***a* of reduced diameter, which extends within a centrally disposed opening provided in the lower plate **501**. A sweat connection between the side walls of this opening and the sides of the extended portion **502***a* is used rigidly to secure the center pole piece **502** to the bottom plate **501**. At its upper end the center pole piece **502** is provided with a portion **502***b* of reduced diameter, which extends within a centrally disposed opening **503***a* formed in the top plate **503**. As best shown in Fig. 5 of the drawings, the diameter

of the opening 503a is slightly larger than the diameter of the upper portion 502b of the pole piece 502. The upper end of the center pole piece is concentrically disposed within the opening 503a, whereby an annular air gap is formed between the adjacent side walls of the opening and the center pole piece. The magnetic circuit assembly is completed by means of three clamping screws 504 which extend through openings provided in the bottom plate 501 and are threaded into tapped holes drilled in the top plate 503. These screws serve rigidly to clamp the annular permanent magnet 500 between the top and bottom plates 503 and 501.

The moving system of the translating device comprises a cone-shaped diaphragm 505 which is formed of pressed fiber and is carried by a supporting structure which comprises a bottom ring 506, six spacing collars 507, a pair of clamping rings 508 and 509, two paper washers 510 and 511, and six assembly screws 512. The character of the diaphragm depends upon whether the device is to be used as a transmitting or receiving element. If the device is to be used as a transmitter, the diaphragm is of one-piece construction and is provided with an outer flat annular ring portion 505a which extends between and is cemented to the paper washers 510 and 511 and is uniformly clamped around its periphery between these washers by the two clamping rings 508 and 509. If the device is to be used as a receiving element, the diaphragm construction illustrated in Fig. 8 of the drawings is used. In this construction only the bulbous portion of the diaphragm 505 is constructed of molded or pressed fiber, the periphery of this element being secured to an annular ring 505b formed of treated silk which is disposed between and cemented to the paper washers 510 and 511. The purpose of this arrangement is to permit substantially free vibration of the diaphragm element 505, particularly at the low frequencies of the operating frequency range, whereby the response of the device at these frequencies is enhanced. With the one-piece diaphragm arrangement, on the other hand, the diaphragm is considerably stiffer and, accordingly, the response thereof, particularly at low frequencies, is substantially less than when the Fig. 8 arrangement is used. By virtue of this increased stiffness, low frequency noise components of sound are prevented from producing any substantial response of the device.

A moving coil 513 is cemented to the lower bulbous portion of the diaphragm 505 and is concentrically disposed within the air gap defined by the upper portion 502b of the pole piece 502 and the opening 503a in the top plate 503. The terminal ends of this coil may be electrically connected to lead-in wires in any desired manner although, preferably, the connections are made at anchor posts which extend through and are secured to the lower bottom portion of the diaphragm 505. In order to preserve the correct lateral and axial spacing of the moving coil 513 in the air gap of the magnetic circuit, and to provide additional support for the diaphragm 505, a string supporting arrangement is provided. This arrangement comprises three connected strings 514a, 514b and 514c which extend through equi-angularly spaced openings cut through the lower portion of the diaphragm member 505, and are joined together, as indicated at 514d, within the dished cavity of this member. The free ends of the three strings are respectively anchored by clamping the same to the lugs 515a, 515b and 515c which extend radially inward and are turned upward from the supporting ring 506. Small clamping plates 516a, 516b and 516c disposed beneath shortened spacing collars 507 are used to clamp the free ends of the strings 514a, 514b and 514c against the lugs 515a, 515b and 515c. Preferably the three strings 514a, 514b and 514c are formed of silk fishline or the like, and it will be understood that by appropriately tensioning the three strings the required support for the moving coil 513 may be obtained.

In order to seal the annular cavity, formed between the spaced apart annular permanent magnet 500 and the pole piece 502, from the acoustical cavity 517 adjacent the lower side of the diaphragm 505, thereby to enhance the damping of the diaphragm and thus produce a more uniform response thereof over the entire operating frequency range, a sealing ring 518 is provided which snugly encloses the upper end portion 502b of the center pole piece 502, and is clamped to the underside of the top plate 503 by means of assembly screws 519. This ring is preferably formed of rubber, molded Bakelite or other insulating material having non-magnetic properties.

In the assembly of the translating device the magnetic circuit structure is built by first securing the sealing ring 518 to the underside of the top plate 503 and then setting the assembly screws 504 to clamp the annular permanent magnet 500 between the top and bottom plates 503 and 501. After the magnetic circuit structure is thus assembled the portion of the sealing ring 518 facing outward through the air gap of the structure may be painted with shellac or other sealing compound, to provide an acoustical seal which blocks off the cavity of the magnetic circuit structure from the cavity 517 adjacent the underside of the diaphragm 505. The diaphragm assembly is prepared by cementing the two paper washers 510 and 511 to the top and bottom surfaces of the flat annular portion 505a of the diaphragm 505, assuming that a transmitting element is being constructed, and by cementing the moving coil 513 to the lower central portion of the diaphragm member. If the device is to be used as a loudspeaking receiver element, the diaphragm structure illustrated in Fig. 8 of the drawings is constructed by first cementing the paper washers 510 and 511 to the opposite peripheral surfaces of the silk ring 505b, after which the inner upper edge surfaces of the silk ring are cemented to the underside of the diaphragm 505. Following the construction of the diaphragm structure, the three strings 514a, 514b and 514c are drawn through the angularly spaced openings provided in the base of the diaphragm 505. After this operation is performed, the supporting ring 506, the clamping rings 508 and 509 and the assembled diaphragm structure may be stacked on the top plate 503, and the assembly screws 512 may successively be inserted through the registering openings provided in the stacked clamping rings and diaphragm structure, the spacing collars 507, and the supporting ring 506. Initially the screws which extend through the clamping elements 516 are not tightened, but the alternate assembly screws which extend only through alternate spacing collars 507 are tightened sufficiently to provide a semi-rigid assembly. Following this operation the ends of the strings 514a, 514b and 514c may be threaded between the clamping elements 516a, 516b and 516c and their associated lugs 515a, 515b and 515c, and properly tensioned to provide the required lateral and axial support for

the diaphragm 505. Thereafter the assembly screws 512 may be tightened securely to clamp the ends of the strings 514a, 514b and 514c between the clamping elements 516a, 516b and 516c and their respective associated lugs 515a, 515b and 515c. Thus the structure of the translating device is completed.

As pointed out above, each transmitting and receiving element, as constructed in the manner just described, is preferably embedded in a block of acoustical insulating material to prevent the transmission of sound waves and mechanical vibrations to the moving system of the element. In the arrangement illustrated in Fig. 5 of the drawings, the translating device is disposed in an opening formed in a block of acoustical insulating material 520. This block of insulating material, which may be of the desired configuration, and more specifically may be of any configuration illustrated in Figs. 4a, 4b, 4c, 4d and 4e of the drawings, is preferably preformed to the desired shape in accordance with the method described and claimed in co-pending application Serial No. 467,695, filed Dec. 3, 1942, Giannini. In brief, the method there disclosed comprises mixing a loose insulating material of the rock wool type with a cement binder, and molding the mixture into a solid block of the desired shape before drying of the binder starts. The molded block obtained after the binder is fully set, is somewhat porous and will still transmit air through some of its surfaces. Accordingly the outer surfaces of the molded block are painted with one or more coats of lacquer to minimize sound transmission therethrough. It has been found that the number of coats or the thickness of the layer of lacquer on the outside surfaces of the molded block determine, to some extent, the acoustical permeability of the structure. Hence, by appropriately controlling the depth of the lacquer layer, the acoustical characteristics of the sound translating device inserted therein may in part be controlled. In the illustrative structure shown in Fig. 5 of the drawings, the block of molded acoustical material 520 may be either round or square in horizontal cross section, and is provided with an opening which snugly receives the side walls of the completed transmitting or receiving element. If the unit is to operate as a nondirectional device, the assembly is completed by closing the opening in which the transmitting or receiving element is inserted with a silk screen 523 having approximately the characteristic impedance of air, over which is placed a thin sheet of aluminum 524 having a number of holes of appropriate size cut therethrough for the purpose of transmitting sound to or from the diaphragm of the enclosed element. A clamping ring and assembly screws, which are passed through registering openings in the clamping ring, the aluminum plate 524 and the molded block of insulating material, may be used to hold the aluminum plate 524 and the silk screen 523 in assembled relationship on the block of insulating material.

If directional characteristics are to be imparted to the device, an additional block of molded acoustical insulating material, constructed in accordance with the method briefly outlined above, and having sound transmitting passages of appropriate lengths and dimensions preformed therein, may be provided. A simple embodiment of an acoustical insulating block provided with such passages is illustrated in Fig. 9 of the drawings as being adapted for use in conjunction with the unit illustrated in Fig. 5 of the drawings. More specifically, the Fig. 9 arrangement comprises a block of acoustical insulating material 521 which is provided with a number of sound transmitting passages 522 molded or cut therethrough along the axis of sound transmission to and from the diaphragm of the associated transmitting or receiving element. These passages are of the correct dimensions, i. e., diameters and lengths, to provide for maximum sound energy transfer between the atmosphere and the cavity immediately adjacent the outer surface of the diaphragm. The block of acoustical insulating material 521 may be secured to the block of insulating material 520 to clamp the aluminum sheet 524 and the silk screen 523 to the top surface of the block 520 by means of assembly screws passed through registering openings in the two insulating blocks.

From the foregoing explanation it will be understood that a transmitting and a receiving element, each constructed in the improved manner illustrated in Figs. 5 to 8, inclusive, of the drawings, may be mounted in one and the same block of acoustical insulating material. This block may be preformed to provide the desired mean spacing between the sound transmitting and sound receiving openings adjacent the diaphragms of the loudspeaker and microphone elements, respectively. It will also be understood that in the unit as thus formed the conductive coupling between the two elements is reduced to a minimum by virtue of the vibration absorbing characteristics of the acoustical block. Moreover, the small effective diameter of the loudspeaker element, as shown in Fig. 5 of the drawings, contributes materially to the acoustical attenuation between the transmitting and receiving elements. This attenuation may also be enhanced by utilizing the sound directing arrangements illustrated in Figs. 4b, 4c, 4d and 4e of the drawings in the construction of the block of insulating material, or by using either of the arrangements shown in Fig. 4a or 4e of the drawings. In short, the construction of the transmitting and receiving elements as well as the physical arrangement of these elements and the manner in which the elements are mounted, all contribute to the reduction in acoustical coupling between these elements as provided at each station of the system. This means that the transmitting and receiving amplifiers at each of the two connected stations 10 and 11, as well as the channel amplifiers in the central repeater 12, may be operated with normal gain settings which are substantially greater than the permissible gain settings when conventional microphone and loudspeaking arrangements are used.

In considering the operation of the system, it may be assumed that the signal amplifiers and the control network, as provided at each of the two stations 10 and 11, are active, and that the central repeater 12 is conditioned for operation. In this regard it will be noted that to condition the circuit equipment provided at the west station 11 for operation, the switch 338 is manually operated to its closed-circuit position wherein alternating current is delivered to the parallel-connected windings 355 and 337 of the power transformers 354 and 336. With these transformers energized, low voltage alternating current is delivered to the cathodes of each of the tubes 342, 322, 326, 330 and 308 over obvious circuits. With the rectifier tube 342 in operation, current alternately traverses the two anodes of the tube 342 during alternate half-cycles of

the voltage developed across the high voltage secondary winding 339, and is passed through each of the two resistors 343 and 349 in the same direction. The alternating components of the voltage thus developed across the resistor 349 are minimized through operation of the filter network comprising the choke coil 346 and the shunt-connected condensers 347 and 348. The direct voltage developed across the section 343a of the resistor 343 is negatively applied to the control electrode 306b of the transmitting amplifier tube 306 to determine the operating point on the characteristic of this tube. Similarly, the voltage drop across the resistor section 343b is negatively applied to the control electrode 330b of the tube 330 to determine the normal space current flow through this tube.

Initially, the voltage dividing resistor 305 is so adjusted that the maximum signal output from the amplifier 300 consistent with stability of the station circuit is obtained when heating current of rated value traverses the cathode 306c of the tube 306. Similarly, the voltage dividing resistor 307 is initially adjusted so that the maximum signal output from the amplifier 301 consistent with stability of the station circuit is obtained when the amplifier 301 is operating with normal signal current gain therethrough. In this regard it will be apparent that the stability of the system is determined by the combined signal current gains through the two amplifiers 300 and 301 and, hence, the gain setting of each amplifier is dependent upon the setting of the other amplifier. Assuming that the on-off switch 361 occupies the position illustrated in the drawings, the signal current output from the receiving amplifier 301 is in part determined by the setting of the adjustable voltage dividing resistor 307 and in part by the resistance of the shunt connected space current path of the control tube 330. The resistance of the space current path of the tube 330 depends, in turn, upon the negative bias voltage impressed across the input electrodes 330b and 330c thereof. Normally this voltage is equal to the sum of the voltage drop across the resistor section 343b and the voltage drop across the cathode biasing resistor 352. The total magnitude of this bias voltage is normally of the order of 23 volts. With the two tubes 306 and 330 thus conditioned for operation, the current traversing the parallel-connected space current paths thereof divides between the resistor 352 and the cathode 306c of the transmitting amplifier tube 306. The value of the resistor 352 may be so chosen that rated current normally traverses the cathode 306c.

With the gain settings of the two amplifiers 300 and 301 determined in the above-described manner, the circuit constants of the station circuit are so chosen that the signal current gains through the two amplifiers 300 and 301 are substantially equal. Stability of the station circuit may then be obtained during installation of the system by adjusting the voltage dividers 305 and 307 until any tendency for the station circuit to oscillate is eliminated.

With the central repeater 12 conditioned for operation, but inactive, no signal currents are transmitted through either of the two amplifier tubes 223 and 227 to either of the two rectifying sections of the duplex diode tube 231, and hence no bias voltage is developed across the resistor 234. Accordingly the space current flow through the tubes 232 and 233 and their respective associated resistors 236a and 236b is determined by the setting of the adjustable cathode biasing resistors 235a and 235b. Each of these resistors is initially adjusted so that the space current flow through the associated tube develops a voltage of approximately 12 volts across the associated resistor 236a or 236b. The voltage across the resistor 236a is negatively applied to the control electrode 207b of the west-east amplifier tube 207. Similarly the voltage developed across the resistor 236b is negatively applied to the control electrode 212b of the east-west amplifier tube 212.

Assuming that the microphone-loudspeaker unit illustrated in Fig. 4a of the drawings is utilized in conjunction with the circuit equipment illustrated in Fig. 3 of the drawings and that a user of the station equipment speaks into the microphone 401, the signal voltage developed in the moving coil of this microphone is transmitted through the coupling transformer 304 and the portion of this voltage appearing across the lower portion of the voltage dividing resistor 305 is impressed upon the input electrodes 306b and 306c of the transmitting amplifier tube 306. The signal currents as amplified by the tube 306 are transmitted through the coupled windings of the hybrid system 302 and over the conductors of the line 14 to the windings of the hybrid system 203. By virtue of the arrangement of the coupled windings of the hybrid system 302 and the action of the balancing network 303, only a small portion of the signal current energy is transmitted through the hybrid system to the input electrodes of the receiving amplifier tube 308. The signal voltage appearing across the receiving terminals of the hybrid system 203 is transmitted through the coupling transformer 206 and is impressed across the input electrodes 207b and 207c of the west-east amplifier tube 207 in parallel with the primary winding of the coupling transformer 221. The signal currents as amplified by the tube 207 are transmitted through the coupling transformer 208 and the coupled windings of the hybrid system 202 to the line 13. From this point the signal currents are transmitted over the line 13 and through the hybrid system 102 to the input circuit of the signal current amplifier 105. These currents as amplified by the amplifier 105 are transmitted to the moving coil of the loudspeaker 101 for reproduction.

The signal voltage as impressed between the input electrodes 223b and 223c of the amplifier tube 223 through the coupling transformer 221 and the voltage divider 222, is amplified through this tube and impressed through the coupling transformer 224 across the anode 231a and the cathode 231c of the duplex diode 231. More specifically, the voltage appearing across the secondary winding of the transformer 224 causes a pulsating direct current to traverse the resistor 234 in a direction which may be traced as extending from the upper terminal of this winding by way of the risistor 230, the anode 231a, the space current path between this anode and the cathode 231c and the resistor 234 to the lower terminal of the indicated transformer winding. This pulsating current is smoothed through the action of the condenser 236 which shunts the resistor 234. The voltage thus developed across the resistor section 234a is negatively applied to the control electrode of the tube 232 to decrease the space current flow through this tube and thus lower the voltage drop across the biasing resistor 236a. When this voltage drop is decreased the negative bias on the control electrode 207b of the active west-east signal amplifier

tube 207 is lowered to increase the amplification factor of this tube. At the same time that the gain through the active west-east channel 200 of the repeater 12 is thus increased, the gain of the inactive east-west channel 201 is correspondingly decreased. Thus it will be noted that the voltage drop across the resistor section 234b is positively applied to the control electrode of the tube 233, whereby the space current flow through this tube is increased. As a result the voltage drop across the biasing resistor 236b is increased. Since this voltage is negatively applied to the control electrode 212b of the tube 212, it will be understood that a corresponding decrease in the signal current gain through the amplifier tube 212 occurs.

From the above explanation it will be understood that the increase in signal current gain through the active west-east transmission channel 200 is accompanied by a corresponding decrease in the gain through the inactive east-west transmission channel 201 of the central repeater 12. Thus the stability of the repeater network is preserved. In this regard it will be noted that the network includes a substantially closed signal current circuit which comprises the two channels 200 and 201 and the coupling paths through the two hybrid systems 202 and 203, and that if the two amplifier tubes 207 and 212 are both operated at the high gain settings required during signal current transmission, the total gain around the closed circuit may substantially exceed the electrical losses of the circuit. When this condition prevails the circuit network is highly unstable and an oscillatory condition may be set up therein even when signal currents of relatively small amplitudes are transmitted therethrough. Due to the action of the control network 220, however, the total gain around the closed circuit is maintained below the predetermined value at which the circuit is stable by concurrently increasing the gain of the channel in use and decreasing the gain of the inactive channel. Accordingly, the stability of the repeater is preserved even though signal currents of substantial magnitude are transmitted through the repeater. Each time signal current transmission over the line 14 is terminated to arrest the signal input to the control network 220, the bias voltages across the two resistor sections 234a and 234b are reduced to zero, whereby the normal bias voltages across the two biasing resistors 236a and 236b are restored. The signal current gain through the amplifier tube 207 is thus decreased to normal and the signal current gain through the amplifier tube 212 is increased to its normal value. The rate at which the bias voltages across the resistors 236a and 236b are restored to normal is primarily determined by the time constant of the network comprising the resistor 234 and the condenser 236. The resistance and capacitance values of this network are proportioned to provide the necessary "hangover" period at each signal current break-off point, in order to prevent syllable clipping which would otherwise occur.

When sound waves are transmitted to the microphone 100 provided at the east station 10, corresponding signal currents are developed in the output circuit of the signal current amplifier 104 and are transmitted through the hybrid system 102, over the line 13 and through the hybrid system 202 to the parallel-connected input circuits of the channel amplifier tube 212 and the control amplifier tube 227. These signal currents as amplified by the channel amplifier 201 are transmitted through the coupling transformer 213 and the hybrid system 203 to the line 14. From this point they are transmitted over the line 14 and through the hybrid system 302 to the input circuit of the receiving amplifier 301 provided at the west station 11. After being amplified by the receiving amplifier tube 308, the signal currents are transmitted through the coupling transformer 309 and over the cord conductors 431 to the moving coil of the loudspeaker 402 for reproduction.

The signal voltage as impressed between the input electrodes of the amplifier tube 227 through the coupling transformer 225 and the voltage divider 226 is amplified by this tube and impressed through the coupling transformer 228 across the anode 231d and the cathode 231e of the duplex diode 231. More specifically, the voltage appearing across the secondary winding of the transformer 228 causes a pulsating direct current to traverse the resistor 234 in a direction which may be traced as extending from the upper terminal of this winding by way of the resistor 229, the anode 231d, the space current path between this anode and the cathode 231e, and the resistor 234 to the lower terminal of the indicated transformer winding. This pulsating current is smoothed through the action of the condenser 236, so that a substantially steady direct voltage is developed across the resistor 234. The portion of this voltage appearing across the resistor section 234a is positively applied to the control electrode of the tube 232 to increase the space current flow through this tube and thus increase the voltage drop across the biasing resistor 236a. When this voltage drop is increased the negative bias on the control electrode 207b of the inactive west-east signal amplifier tube 207 is increased to decrease the amplification factor of this tube. At the same time that the gain through the inactive west-east channel 200 of the repeater 12 is thus decreased, the gain of the active east-west channel 201 is correspondingly increased. Thus it will be noted that the voltage drop across the resistor section 234b is negatively applied to the control electrode of the tube 233 so that the space current flow through this tube is decreased. As a result, the voltage drop across the biasing resistor 236b is decreased. Since this voltage is negatively applied to the control electrode 212d of the tube 212, it will be understood that a decrease in the magnitude of this voltage produces a corresponding increase in the signal current gain through the amplifier tube 212. Thus it will be seen that when signal currents are transmitted in the east-west direction from the station 10 to the station 11, the signal current gain through the active channel 201 is increased the required amount for satisfactory reproduction of the signal currents by the loudspeaker 402 in use, and this signal current gain is accompanied by a correponding decrease in the gain of the inactive west-east channel 200, whereby the stability of the central repeater 12 is preserved. It will also be understood from the above explanation that each time signal current transmission over the line 13 from the east station 10 is terminated to arrest the signal input to the control network 220, the bias voltages across the two resistor sections 234a and 234b are reduced to zero after a short time interval which is determined by the time constant of the shunt circuit including the resistor 234 and the condenser 236. Accordingly, the bias voltages across the two biasing resistors 236a and 236b are again equalized

at their respective normal values, whereby the signal current gain through the amplifier tube 207 is increased to normal and the signal current gain through the amplifier tube 212 is decreased to its normal value.

Referring now more particularly to the method of controlling the network 315 provided at the west station 11, it will be noted that a portion of the signal voltage appearing across the output circuit of the receiving amplifier tube 308 is impressed across the input electrodes 322b and 322c of the amplifier tube 322 through the contacts of the switch 361 and the frequency discriminating network 316. As pointed out above, this network is designed to favor signal currents having frequencies in the band ranging from approximately 300 cycles per second to approximately 1200 cycles per second. In this regard it will be understood that the ratio of the signal voltages across the two resistors 319 and 321 is determined by the reactance of the condenser 320. At relatively low signal voltage frequencies the reactance of this condenser is relatively high so that a relatively large proportion of the available voltage drop across the two series-connected resistors 319 and 321 appears across the resistor 321. On the other hand, as the signal current frequency increases, a corresponding decrease occurs in the reactance of the condenser 320, so that an increasing percentage of the available signal voltage appears across the resistor 319. Thus by properly proportioning the constants of the network 316, this network may be operated to favor signal currents of the frequencies within the band indicated. The reason for providing a discriminating network 316 which favors signal current frequencies within the low end of the operating range, is to make the control network 315 primarily responsive to the band of frequencies at which the major portion of the voice current energy is produced. Thus the predominant portion of the frequencies used in ordinary speech lies within the band ranging from 300 to approximately 1200 cycles per second.

The signal voltage as developed across the resistor 321 is amplified by the tube 322, and the amplified signal currents cause corresponding induced voltages in the secondary winding of the coupling transformer 324, which voltages are applied across the anode and cathode of the rectifying tube 326. This tube is biased by means of the battery 325 to a point on its operating characteristic such that no current will traverse the space current path thereof until the signal voltage appearing across the secondary winding of the transformer 324 exceeds a predetermined value. Thus, so long as the signal voltage across the output circuit of the receiving amplifier tube 308 does not exceed a predetermined value, the biasing battery 325 prevents the control network 315 from changing the gain of either of the two amplifiers 301 or 302. When, however, the signal voltage appearing across the output circuit of the amplifier tube 308 exceeds a predetermined value, determined by the voltage of the biasing battery 325, the signal voltage across the secondary winding of the transformer 324 becomes sufficient to cause current to traverse the space current path of the tube 326. This current traverses the biasing resistor 328, is smoothed by the condenser 329, and flows in a direction such that the resulting direct voltage across the resistor 328 is additive with respect to the bias voltage across the section 343b of the resistor 343. Accordingly the net bias voltage across the input electrodes 330b and 330c of the control tube 330 is increased to increase the resistance of the space current path of this tube. Incident to this increase in space current resistance of the tube 330, the shunting effect of the tube on the output circuit of the receiving amplifier tube 308 is correspondingly decreased to produce an increase in the signal current gain through the amplifier 301. This decrease in the shunting effect of the tube 330 is supplemented by an increase in the amplification factor of the tube 308 occasioned by an increase in the voltage on the anode 308a. Thus when the space current flow through the tube 330 is decreased the voltage drop across the resistor 362 is correspondingly decreased, so that a larger portion of the available voltage across the resistor 349 is applied to the anode 308a of the tube 308. The increase in gain through the amplifier 301 is accompanied by a corresponding or even greater decrease in the gain of the transmitting amplifier 300. Thus when the resistance of the space current path through the tube 330 is increased, the direct current traversing this path and the shunt-connected resistor 352 and cathode 306c is correspondingly reduced. When the current traversing the cathode 306c is reduced, the electron emission of this tube is decreased to lower the amplification factor of this tube. From the above explanation it will be understood that the signal current amplitude at which the control circuit 315 starts inversely to change the gains of the two amplifiers 300 and 301, may be adjusted, through suitable adjustment of the voltage divider 318, to vary the proportion of the available signal voltage which is impressed between the input electrodes of the tube 322. This adjustment is determined to a large extent by the normal gain settings of the two amplifiers 300 and 301. Hence, after the required signal current gain through the two tubes is once established, the voltage divider 318 may be adjusted to provide the minimum signal voltage input to the amplifier tube 322 consistent with the required control of the station circuit.

It will also be understood from the above explanation that after the control circuit 315 starts to operate, the extent to which the signal current gains of the two amplifiers 300 and 301 are inversely changed depends, within limits, upon the magnitude of the signal currents incoming to the west station 11 over the line 14. Preferably, the circuit constants of the network 315 are so adjusted that the amount of the decrease gain of the signal amplifier 300 which occurs in response to any given change in the input signal intensity is just sufficient to maintain the stability of the station circuit. As indicated by the above explanation, the gain control action realized through operation of the network 315 is not effective until the signal input to the loudspeaker 402 exceeds a predetermined value. By virtue of this arrangement, the control network 315 is rendered substantially non-responsive to noise currents resulting from background noises which may be acoustically imposed on the system or to noise currents resulting from electrical transients imposed on the system, which currents are usually of a low order of magnitude. Since such noise currents are usually of low frequency, the coupling condenser 317 may be chosen of such value as to prevent any substantial portion of the resulting voltage across the output circuit of the amplifier tube 308 from appearing across the voltage dividing resistor 318.

Thus, the response of the network 315 is limited to speech or other actual signal current transmission over the two connected lines of the system in an east-west direction. Further, the constants of the station circuit are so chosen that the variation in gain of the amplifier 300, effected through operation of the control network 315, are limited to a definite range which will include all cases of normal signal current intensities.

In the event it is desired to render the control network 315 inactive, the on-off switch 361 is operated to its off position wherein the parallel connection between the space current paths of the two tubes 308 and 330 is broken and anode potential is supplied to the control tube 330 directly from the high voltage terminal of the load resistor 349 included in the power pack 335. With the switch 361 in its off position, it will be apparent that amplified signal voltages appearing across the output circuit of the tube 308 are not impressed upon the frequency discriminating circuit 316. Thus the control network 315 is rendered completely inactive, with the result that current of a substantially constant magnitude is caused to traverse the cathode 306c of the transmitting signal amplifier tube 306 regardless of the level of signal current transmission to the station 11.

While it will be understood that the specifications of the circuit provided at the station 11 may vary according to the design of a particular installation, the following specification of circuit constants for the station circuit of Fig. 3 is included by way of example as being satisfactory.

Tube 306	Commercial type 47
Tube 308	Commercial type 1A5G
Tube 322	Commercial type 26
Tube 326	Commercial type 26
Tube 330	Commercial type 10
Tube 342	Commercial type 80
Condenser 363	0.25 microfarad
Condenser 365	50.0 microfarads
Condenser 317	0.001 microfarad
Condenser 320	0.002 microfarad
Condenser 323	0.05 microfarad
Condenser 327	8.0 microfarads
Condenser 331	0.25 microfarad
Condenser 329	0.01 microfarad
Condenser 345	8.0 microfarads
Condenser 344	8.0 microfarads
Condenser 348	16.0 microfarads
Condenser 347	8.0 microfarads
Condenser 353	5.0 microfarads
Condenser 360	5.0 microfarads
Resistor 305	250,000 ohms
Resistor 364	500,000 ohms
Resistor 366	500,000 ohms
Resistor 307	250,000 ohms
Resistor 362	1250 ohms
Resistor 318	250,000 ohms
Resistor 319	100,000 ohms
Resistor 321	500,000 ohms
Resistor 328	500,000 ohms
Resistor 343	250 ohms
Resistor 349	25,000 ohms
Resistor 350	15,000 ohms
Resistor 351	420 ohms
Resistor 352	160 ohms
Resistor 359	1000 ohms
Battery 325	4.5 volts

Although only one control network 315, which responds to signal currents incoming to the station 11 to control the gains of the amplifiers 300 and 301, has been illustrated in the drawings, it will be understood that a second control network of like arrangement and responsive to signal currents transmitted from the microphone 401 to the amplifier 300, may be provided if necessary. In such case, the input and output circuits of the second control network will be bridged across the output circuit of the amplifier tube 306 and the space current traversing the control tube of the second network will determine the cathode heating current of the receiving amplifier tube. With such an arrangement the second control circuit will function to increase the gain of the transmitting amplifier tube 306 and to decrease the gain of the receiving amplifier tube when sound waves exceeding a predetermined value are transmitted to the microphone 401.

The control circuit shown in Fig. 2 of the drawings of the present application is claimed in the copending application of Giannini and Eisenberg, Serial No. 472,722, filed January 18, 1943, and the control circuit shown in Fig. 3 of the drawings of the present application is claimed in the copending application of Giannini and Eisenberg, Serial No. 419,164, filed November 14, 1941.

While one embodiment of the invention has been described, it will be understood that various modifications may be made therein without departing from the true spirit and scope of the invention.

What is claimed is:

1. In a loudspeaking-intercommunicating system comprising a station network having acoustically coupled transmitter and receiver elements which are electrically coupled to a two-way transmission line over transmitting and receiving channels respectively, and wherein a signal amplifier is provided which tends to impart instability to said network, the method of operation which comprises directionally transmitting sound waves produced by said receiver element away from the response zone of said transmitter along a substantially vertical path, altering the gain of said amplifier in the correct sense and only by the required amount to maintain the stability of said network when signal currents exceeding a predetermined value traverse said receiving channel, and maintaining the gain of said amplifier at the maximum level consistent with stability of said network when signal currents not exceeding said predetermined value traverse said receiving channel.

2. In a loudspeaking intercommunicating system, a network comprising a transmitting element disposed to respond to sound waves transmitted thereto along a substantially horizontal plane, a receiving element disposed to transmit sound waves produced thereby in a vertical direction, variable gain transmitting and receiving channels respectively coupled to said transmitting and receiving elements, means for automatically decreasing the gain of one of said channels only when the signal input to the other of said channels exceeds a predetermined value, and means for limiting the decrease in the gain of said one channel to an amount just sufficient to maintain the stability of said network.

3. In a loudspeaking intercommunicating system, a network comprising a receiving element for directionally transmitting sound waves produced thereby along two spaced apart and diverging paths, a transmitting element disposed substantially equidistant between said paths, whereby sound energy transfer from said receiving element to said transmitting element is mini-

mized, variable gain transmitting and receiving channels respectively coupled to said transmitting and receiving elements, means for automatically decreasing the gain of one of said channels only when the signal input to the other of said channels exceeds a predetermined value, and means for limiting the decrease in the gain of said amplifier to an amount just sufficient to maintain the stability of said network.

4. In a loudspeaking intercommunicating system, a network comprising transmitter and receiver elements having a combined frequency response characteristic which peaks at a predetermined frequency within the voice frequency range and having their sound receiving and discharge openings spaced apart a distance equal to substantially an odd number of times one quarter of the wave length which corresponds to said frequency, variable gain transmitting and receiving channels respectively coupled to said transmitting and receiving elements, means for automatically decreasing the gain of one of said channels only when the signal input to the other of said channels exceeds a predetermined value, and means for limiting the decrease in the gain of said one channel to an amount just sufficient to maintain the stability of said network.

5. In a loudspeaking intercommunicating system, a network comprising transmitter and receiver elements having a combined frequency response characteristic which peaks at a predetermined frequency within the lower portion of the voice frequency range, variable gain transmitting and receiving channels respectively coupled to said transmitting and receiving elements, and means comprising a frequency discriminating circuit which favors the frequencies within said lower portion of the voice frequency range for automatically decreasing the gain of one of said channels only when the signal input to the other of said channels exceeds a predetermined value.

6. In a loudspeaking intercommunicating system, a network comprising transmitter and receiver elements having a combined frequency response characteristic which peaks at a predetermined frequency within the lower portion of the voice frequency range, variable gain transmitting and receiving channels respectively coupled to said transmitting and receiving elements, means comprising a frequency discriminating circuit which favors the frequencies within said lower portion of the voice frequency range for automatically decreasing the gain of one of said channels only when the signal input to the other of said channels exceeds a predetermined value, and means for limiting the decrease in the gain of said one channel to an amount just sufficient to maintain the stability of said network.

7. In a loudspeaking intercommunicating system, a network comprising transmitter and receiver elements having a combined frequency response characteristic which peaks at a predetermined frequency within the lower portion of the voice frequency range and having their sound receiving and discharge openings spaced apart a distance substantially equal to an odd number of times one-quarter of the wave length which corresponds to said frequency, variable gain transmitting and receiving channels respectively coupled to said transmitting and receiving elements, and means comprising a frequency discriminating circuit which favors the frequencies within said lower portion of the voice frequency range for automatically decreasing the gain of one of said channels only when the signal input to the other of said channels exceeds a predetermined value.

8. In a loudspeaking intercommunicating system, a network comprising transmitter and receiver elements having a combined frequency response characteristic which peaks at a predetermined frequency within the lower portion of the voice frequency range and having their sound receiving and discharge openings spaced apart a distance substantially equal to an odd number of times one-quarter of the wave length which corresponds to said frequency, variable gain transmitting and receiving channels respectively coupled to said transmitting and receiving elements, means comprising a frequency discriminating circuit which favors the frequencies within said lower portion of the voice frequency range for automatically decreasing the gain of one of said channels only when the signal input to the other of said channels exceeds a predetermined value, and means for limiting the decrease in the gain of said one channel to an amount just sufficient to maintain the stability of said network.

9. In a loudspeaking intercommunicating system, a network comprising a transmitter element, a loudspeaking receiver element including a vibrating diaphragm having an effective diameter less than one-half the wave length which corresponds to the highest frequency of the operating frequency range of the system, variable gain transmitting and receiving channels respectively coupled to said transmitting and receiving elements, and means for automatically decreasing the gain of one of said channels only when the signal input to the other of said channels exceeds a predetermined value.

10. In a loudspeaking intercommunicating system, a network comprising a transmitter element, a loudspeaking receiver element including a vibratory diaphragm having an effective diameter less than one-half the wave length which corresponds to the highest frequency of the operating frequency range of the system, said elements having a combined frequency response characteristic which peaks at a predetermined frequency within said range and being disposed so that their sound receiving and discharge openings are spaced apart by a distance which is substantially equal to an odd multiple of one-quarter of the wave length which corresponds to said predetermined frequency, variable gain transmitting and receiving channels respectively coupled to said transmitting and receiving elements, and means for automatically decreasing the gain of one of said channels only when the signal input to the other of said channels exceeds a predetermined value.

11. In a loudspeaking intercommunicating system, a network comprising a transmitter element, a loudspeaking receiver element including a vibrating diaphragm having an effective diameter less than one-half the wave length which corresponds to the highest frequency of the operating frequency range of the system, said elements having a combined frequency response characteristic which peaks at a predetermined frequency within the lower portion of said range, variable gain transmitting and receiving channels respectively coupled to said transmitting and receiving elements, and means comprising a frequency discriminating circuit which favors the frequencies within said lower porton of said range for automatically decreasing the gain of one of said channels only when

the signal input to the other of said channels exceeds a predetermined value.

12. In a loudspeaking intercommunicating system, transmitter and receiver elements having a combined frequency response characteristic which peaks at a predetermined frequency, said elements having their sound receiving and discharge openings spaced apart by a distance substantially equal to an odd multiple of one-quarter of the wave length which corresponds to said predetermined frequency, and transmitting and receiving channels respectively coupled to said transmitting and receiving elements.

13. In a loudspeaking intercommunicating system, acoustically coupled transmitting and receiving elements having a combined frequency response characteristic which peaks at a predetermined frequency within the lower portion of the operating frequency range of the system, said elements having their sound receiving and discharge openings spaced apart by a distance substantially equal to an odd multiple of one-quarter of the wave length which corresponds to said predetermined frequency, variable gain communication channels respectively coupled to said elements, and means comprising a frequency discriminating network which favors signal frequencies within said lower portion of said operating frequency range for controlling the gain of at least one of said channels to prevent said system from oscillating due to undesired coupling between said channels.

14. In a loudspeaking intercommunicating system, a transmitter element, a loudspeaking receiving element which includes a diaphragm having an effective diameter less than one-half of the wave length corresponding to the highest frequency of the operating frequency range of the system, said elements having a combined frequency response characteristic which peaks at a predetermined frequency within said range and having their sound receiving and discharge openings spaced apart by a distance substantially equal to an odd multiple of one-quarter of the wave length which corresponds to said predetermined frequency, and transmitting and receiving channels respectively coupled to said transmitting and receiving elements.

15. In a loudspeaking intercommunicating system, a transmitter element, a loudspeaking receiving element which includes a diaphragm having an effective diameter less than one-half of the wave length corresponding to the highest frequency of the operating frequency range of the system, said elements having a combined frequency response characteristic which peaks at a predetermined frequency within the lower portion of said range and having their sound receiving and discharge openings spaced apart by a distance substantially equal to an odd multiple of one-quarter of the wave length which corresponds to said predetermined frequency, variable gain communication channels respectively coupled to said elements, and means comprising a frequency discriminating network which favors signal frequencies within said lower portion of said operating frequency range for controlling the gain of at least one of said channels to prevent said system from oscillating due to undesired coupling between said channels.

16. In a loudspeaking intercommunicating system, a transmitter element and a loudspeaking receiver element which includes a diaphragm having an effective diameter less than one-half the wave length corresponding to the highest frequency of the operating frequency range of the system, and transmitting and receiving channels respectively coupled to said transmitting and receiving elements.

17. In a loudspeaking intercommunicating system, a transmitter element and a loudspeaking receiver element which includes a diaphragm having an effective diameter less than one-half the wave length corresponding to the highest frequency of the operating frequency range of the system, said elements having a combined frequency response characteristic which peaks at a predetermined frequency within the lower portion of said operating frequency range, variable gain communication channels respectively coupled to said elements, and means comprising a frequency discriminating network which favors signal frequencies within said lower portion of said operating frequency range for controlling the gain of at least one of said channels to prevent said system from oscillating due to undesired coupling between said channels.

GABRIEL M. GIANNINI.