May 1, 1951 F. T. SMITH 2,551,509

BABY CARRIER

Filed Dec. 17, 1947

FIG. 1

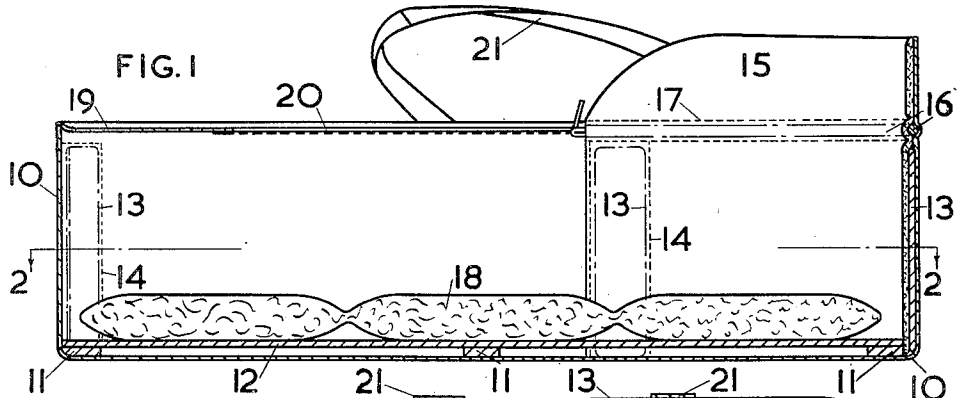

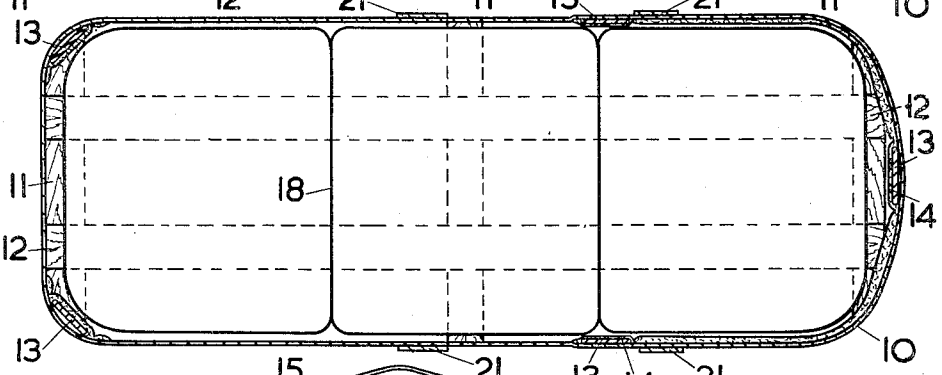

FIG. 2

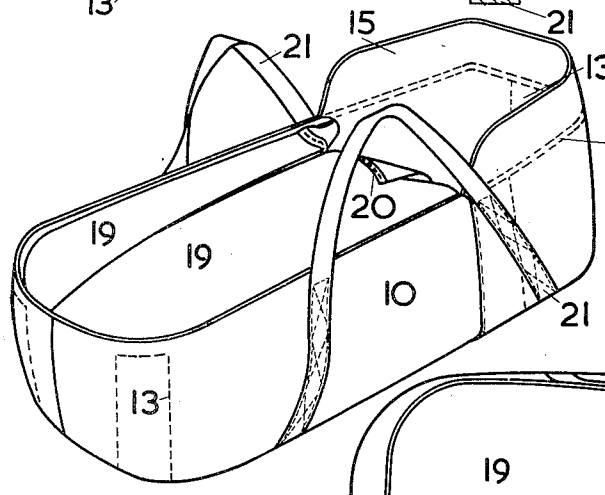

FIG. 3

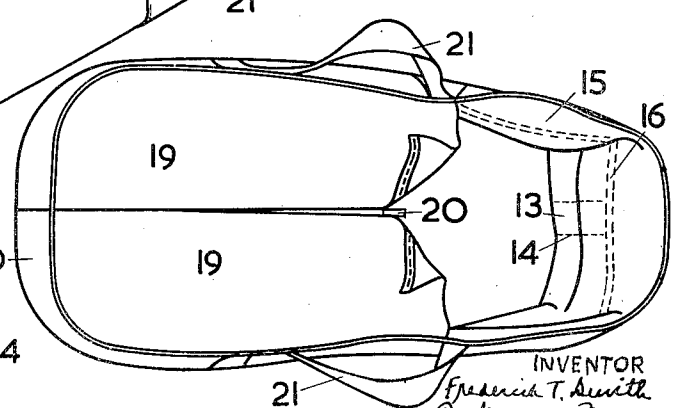

FIG. 4

INVENTOR
Frederick T. Smith
By Noonan & Osteman
ATTORNEYS

Patented May 1, 1951

2,551,509

UNITED STATES PATENT OFFICE

2,551,509

BABY CARRIER

Frederick Thomas Smith, Altrincham, England, assignor to M. S. P. (Luxi-Products) Limited, Altrincham, England, a company of Great Britain

Application December 17, 1947, Serial No. 792,116
In Great Britain January 3, 1947

1 Claim. (Cl. 224—6)

1

This invention relates to improvements in carrying cots for infants.

The object of the invention is a carrying cot for infants the sides of which will not splay out and which will retain its shape when in use.

According to the invention the cot comprises flexible sides, ends and bottom formed with pockets to receive rigid supports and an apron permanently affixed to the sides and one end and divided longitudinally, access being had to the interior through the divided apron which when in use is closed by a slide fastener to prevent the sides from splaying outwards, when the cot is being carried.

A further feature of the invention is the provision of extended sides and end at the head end to form a wind shield.

The invention will be described with reference to the accompanying drawings:

Fig. 1 is a longitudinal section of the cot,

Fig. 2 is a plan on line 2—2, Fig. 1,

Fig. 3 is a perspective view to a smaller scale,

Fig. 4 is a perspective plan view.

The cot is constructed with sides, ends and bottom 10 of flexible material and is retained in position to receive an infant by transverse stiffening members or slats 11 of rigid material affixed to a rigid base 12 adapted to lie on the flexible material forming the bottom. Further stiffening members 13 of rigid material are inserted in pockets 14 in the sides of the flexible material, these pockets 14 being provided at the head end, at the foot end and/or part way along the length.

The head end is provided with an extension 15 projecting above the upper edge of the sides to form a wind shield. In order to prevent the head end from closing in, a stiffening rod 16 extends longitudinally along each side and across the end, a pocket 17 being formed in the flexible material around the head end to receive the rod 16.

A mattress 18 may be provided above the rigid base 12 to receive the infant.

The cot is closed by a flexible apron 19 extending from the foot end to a point adjacent to the head end. The apron is formed in two parts divided longitudinally and permanently secured along its sides to the upper edges of the sides and foot end of the cot. The longitudinal divided edges of the apron 19 are connected together when in use by a slide fastener 20, the apron thus preventing the sides of the cot from splaying outwards.

2

The cot is carried by two bands or straps 21 sewn or otherwise attached to the sides of the cot and may extend transversely under the bottom thereof.

The inner surface of the sides and ends of the cot may be padded or quilted.

I claim:

A carrying cot for infants, comprising a substantially rectangular body having sides, head and foot ends and a bottom composed of flexible material, a rigid base above the bottom, stiffening slats extending transversely of the base, the sides having therein in spaced relation to the head end pockets extending upwardly from the base substantially to the upper edges thereof, stiffening members in said pockets extending substantially to the tops thereof, a flexible apron extending longitudinally between the upper portions of the sides from the foot end and terminating adjacent to said stiffening members, the apron having its lateral edges secured to the respective sides and being divided longitudinally intermediately of its width, a slide fastener for securing together the dividing edges of the apron, the head end of the body having a pocket therein exending across and around its upper edge and along the upper edges of the sides to the pockets therein, and a stiffening rod in the pocket around the upper edge of the head end and along the upper edges of the sides and extending to the stiffening members in the upwardly extending pockets in the sides and to the adjacent end of the apron and resting at its ends on the upper ends of said stiffening members and cooperating therewith to rigidify and thus prevent collapse of the head end of the body.

FREDERICK THOMAS SMITH.

REFERENCES CITED

The following references are of record in the file of this patent:

UNITED STATES PATENTS

Number	Name	Date
1,453,942	Mills	May 1, 1923
1,462,897	Barto	July 24, 1923
1,523,217	Juerges	Jan. 13, 1925
1,605,473	Schneidau	Nov. 2, 1926
2,324,495	Deming	July 20, 1943

FOREIGN PATENTS

Number	Country	Date
663,681	Germany	Aug. 11, 1938