P. J. SHNIEDEWEND.

COMBINED LOCKUP AND REGISTER DEVICE FOR PRINTING PRESSES.

APPLICATION FILED SEPT. 28, 1911.

1,068,705. **Patented July 29, 1913.**

Fig. 1.

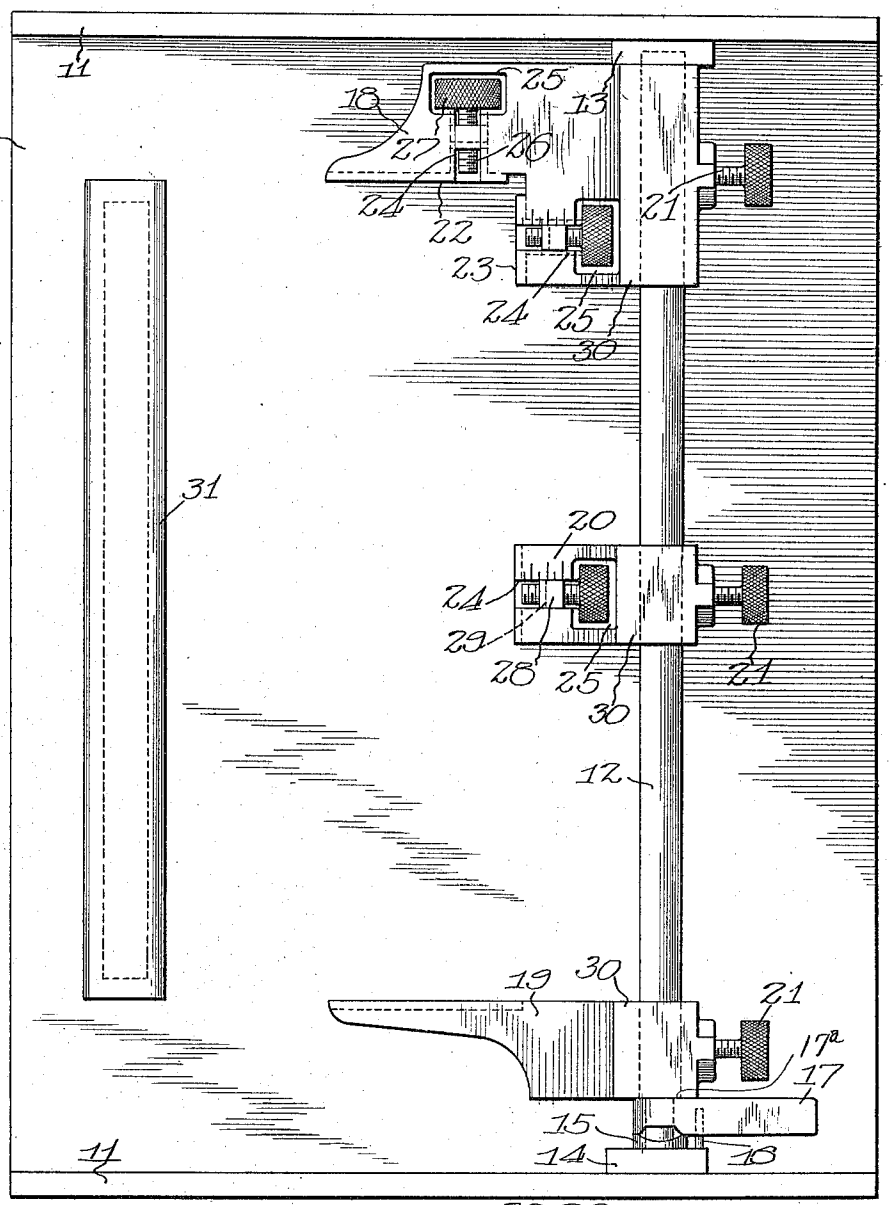

Fig. 2.

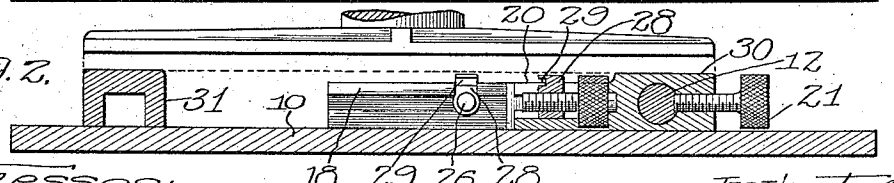

Witnesses:
G. C. Komarus Jr.
R. Burkhardt.

Inventor:
Paul J. Shniedewend
By: Brown Hopkins
Attys

UNITED STATES PATENT OFFICE.

PAUL J. SHNIEDEWEND, OF CHICAGO, ILLINOIS.

COMBINED LOCKUP AND REGISTER DEVICE FOR PRINTING-PRESSES.

1,068,705. Specification of Letters Patent. Patented July 29, 1913.

Application filed September 28, 1911. Serial No. 651,683.

To all whom it may concern:

Be it known that I, PAUL J. SHNIEDEWEND, a citizen of the United States, residing at Chicago, in the county of Cook and State of Illinois, have invented certain new and useful Improvements in a Combined Lockup and Register Device for Printing-Presses, of which the following is a specification.

This invention relates to a lock-up and register device such as may be used in connection with a printing press or with a proof press, and the principal object of the invention, is to provide a device of the class described, which is simple and readily adjustable, and effective and efficient in operation.

For the attainment of these ends and the accomplishment of other new and useful objects, as will appear, this invention consists in the features of novelty in the construction, combination and arrangement of the several parts generally shown in the accompanying drawing and described in the specification, but more particularly pointed out in the appended claims.

In the drawing, Figure 1 is a plan view showing the device constructed in accordance with the principles of the invention and applied to the bed of a printing press. Fig. 2 is a cross sectional view of the same, showing also a platen above the device.

In printing presses or proof presses where it is necessary to take an impression of a form, it is frequently necessary to take two or more impressions upon the same sheet, or in other words, to take a second impression upon a sheet already printed. In such a case, it is necessary to adjust either the form to be printed from or the material to be printed, so that they register when the second impression is made. In effecting this registering of the one with respect to the other, it will be evident that it is easier to move the article to be printed, such for example, as a sheet of paper, than it would be to move the type-form. This invention is designed not only to hold the form securely in position, but also to provide readily adjustable means for centering the form in the type-bed, and also for adjusting the position of material to be printed, so that it will register with the form. An additional feature of this invention is that means are provided to prevent the platen from being pressed too firmly against the type-form.

Referring now more particularly to the drawing, a type-bed 10 is shown, which is provided with lateral ridges or projections 11, between which a device embodying the principles of this invention may be positioned. This device comprises a bar 12 having removable end pieces 13 and 14 at the ends thereof. One of these end pieces, as 14, is preferably provided with a beveled portion 15 and with a detent 16. Rotatable upon the bar 12 is a clamping lever 17 which is provided with beveled faces on one side to engage the beveled portion 15 at the end of the bar, and is mounted to abut a collar or shoulder 17^a on the other side, so that when the lever is turned about the bar until it engages the detent 16, the bar 12 is clamped firmly in position between the said projections 11 of the bed. It will be evident that the bar is readily adjustable in the bed, it being necessary only to raise the lever 17 to disengage the device from the bed.

To position a platen or form upon the bed 10, there are provided adjustable devices in connection with the bar 12 which are adapted to engage the form and to hold it in position. These positioning devices comprise end clamping members 18 and 19, and an intermediate adjusting member 20. These members 18, 19 and 20 are each provided with openings through which the bar 12 is adapted to pass, and upon which they are freely movable and adjustable in position by means of the adjusting screws 21, so that each and all of them may be moved at will along the bar 12 and securely held in place. One of the end members, as 18, is preferably formed with faces 22 and 23 disposed at right angles to each other and with the shoulder portion 17^a against which the lever 17 abuts and the other end member 19 is of a length sufficient to engage a form placed between the two end members, so that a form may be positioned at any desired place on the bed 10, and the end members 18 and 19 moved in position to engage and hold the form in place. The outer

face of the member 20 preferably extends the same distance from the bar as the face 23 of the end member 18, forming a second guide for a form placed between the two end members.

Extending from each of the faces 22 and 23 of the end member 18, and from the face of the member 20, are guide-ways 24, at the rear of which there are larger openings 25. These guide-ways are adapted to receive the adjusting screws 26 which are each provided with a knurled head 27 disposed in the larger opening 25. Each screw 26 is adapted to receive an adjusting nut 28 which is provided adjacent the top surface with a slot 29. The slots in the adjusting nuts will face inwardly, so that when an article to be printed is positioned over a form, the edges of the material will engage by the slots, and by moving the screws 26, the material to be printed may be adjusted in any desired manner to register with the form below. As an adjustment is necessary only in two directions, it will be evident that these devices are sufficient for all registering purposes.

To prevent the platen of the printing press from being pressed down too firmly upon the form, the members 18, 19 and 20 are preferably provided with a projecting or raised portion 30 which is substantially the height of the form to be printed. As these projections are all disposed upon one side of the form, a bar 31 of substantially the same height is provided, which may be placed upon the bed of the press 10 which will engage the other side of the platen, thereby holding it level with respect to the form held between the end members.

It will be seen by reference to Fig. 2 that the projections 30 are slightly higher than the knurled heads 25 of the adjusting screws, and that they extend slightly above the registering nuts 28, so that there is no danger of the platen damaging the nuts or the knurled heads of the screws. It will also be evident that an even impression will be made by the platen of any form positioned upon the bed of the press for the reason that no part of the platen will be allowed to press more firmly upon one end or the other of the form. Furthermore, by this improved construction, the plate or form to be printed, may be adjusted in position upon the bed of the press more easily and quickly than with the previously existing forms, and may be readily centered with respect to the platen.

What I claim is:

1. In an adjustable lock-up and registering device, the combination of devices for locking a form to be printed from in position, and means for registering a material to be printed with the form, the said devices being provided with projecting parts extending above the said registering means.

2. In a device of the class described, the combination with devices for locking and adjusting a form to be printed from in position, of registering means in connection with said devices, the said devices being provided with projecting parts extending above the said registering means, and a bar of the height of the said projecting parts, the said bar and projections being disposed to form bearing surfaces for the printing platen.

3. In a lock-up and registering device for printing presses, the combination of means for adjustably locking the device in the press bed, movable locking devices for holding a form in position on the bed and formed with raised portions substantially as high as the form to be printed, sheet positioning means disposed below the raised portions, and a movable bar substantially as high as the said projections to provide with the said raised portions a bearing surface for the printing platen.

4. In a lock-up and registering device, the combination with a bar adapted to be positioned between the sides of the press bed, an end bearing plate with a beveled surface, a lever rotatably attached to the bar and having a beveled surface to engage with the beveled surface of the bearing plate, and a detent positioned on the bearing plate, the said lever being operable to removably position the said device on the bed.

5. In a device of the class described, the combination with a bar, of means to releasably position the bar in a press bed, form clamping members adjustable on the bar, one of said members being formed with a right angled opening therein, and the other member being adapted to hold a form in position between them, and means to engage the edges of a material to be printed whereby the material may be adjusted to register with a printing form.

6. In a device of the class described, the combination with a bar, of means to releasably position the position of the bar in a press bed, form clamping members adjustable on the bar, means for engaging and adjusting the position of a sheet to be printed to register with the printing plate each comprising a guideway extending from the face of the said adjustable member and communicating with a larger opening, a knurled-headed screw positioned in said slot with its head in said larger opening, and a nut movable in said guideway by the rotation of said screw and having a slot adjacent its upper surface to engage the edge of material to be printed.

7. In a device of the class described, the combination of means for positioning a

printing form, and means for adjusting the position of material to be printed comprising screws movable in guideways in said positioning means, and a nut carried by said screws adapted to be moved in accordance with its rotation and having a slot to engage and position a sheet to be printed with respect to a printing form.

In testimony whereof I have signed my name to this specification, in the presence of two subscribing witnesses, on this 25th day of September, A. D. 1911.

PAUL J. SHNIEDEWEND.

Witnesses:
C. H. SEEM,
FRANCIS A. HOPKINS.

Copies of this patent may be obtained for five cents each, by addressing the "Commissioner of Patents, Washington, D. C."