(12) INTERNATIONAL APPLICATION PUBLISHED UNDER THE PATENT COOPERATION TREATY (PCT)

(19) World Intellectual Property Organization
International Bureau

(43) International Publication Date
20 July 2017 (20.07.2017)

WIPO | PCT

(10) International Publication Number
WO 2017/123486 A1

(51) International Patent Classification:
G06F 1/20 (2006.01)

(21) International Application Number:
PCT/US2017/012672

(22) International Filing Date:
9 January 2017 (09.01.2017)

(25) Filing Language: English

(26) Publication Language: English

(30) Priority Data:
62/277,064 11 January 2016 (11.01.2016) US

(71) Applicant: **3M INNOVATIVE PROPERTIES COMPANY** [US/US]; 3M Center, Post Office Box 33427, Saint Paul, Minnesota 55133-3427 (US).

(72) Inventors: **OUDERKIRK, Andrew J.**; 3M Center, Post Office Box 33427, Saint Paul, Minnesota 55133-3427 (US). **NIE, Qihong**; 3M Center, Post Office Box 33427, Saint Paul, Minnesota 55133-3427 (US). **MCDOWELL, Erin A.**; 3M Center, Post Office Box 33427, Saint Paul, Minnesota 55133-3427 (US). **STEPHENS, Bruce R.**; 3M Center, Post Office Box 33427, Saint Paul, Minnesota 55133-3427 (US). **CLAUSEN, Thomas M.**; 3M Center, Post Office Box 33427, Saint Paul, Minnesota 55133-3427 (US). **POWERS, Max**; 415 Oak Grove Street, Apartment 117, Minneapolis, Minnesota 55403 (US).

(74) Agents: **BRAMWELL, Adam** et al.; 3M Center, Office of Intellectual Property Counsel, Post Office Box 33427, Saint Paul, Minnesota 55133-3427 (US).

(81) Designated States *(unless otherwise indicated, for every kind of national protection available)*: AE, AG, AL, AM, AO, AT, AU, AZ, BA, BB, BG, BH, BN, BR, BW, BY, BZ, CA, CH, CL, CN, CO, CR, CU, CZ, DE, DJ, DK, DM, DO, DZ, EC, EE, EG, ES, FI, GB, GD, GE, GH, GM, GT, HN, HR, HU, ID, IL, IN, IR, IS, JP, KE, KG, KH, KN, KP, KR, KW, KZ, LA, LC, LK, LR, LS, LU, LY, MA, MD, ME, MG, MK, MN, MW, MX, MY, MZ, NA, NG, NI, NO, NZ, OM, PA, PE, PG, PH, PL, PT, QA, RO, RS, RU, RW, SA, SC, SD, SE, SG, SK, SL, SM, ST, SV, SY, TH, TJ, TM, TN, TR, TT, TZ, UA, UG, US, UZ, VC, VN, ZA, ZM, ZW.

(84) Designated States *(unless otherwise indicated, for every kind of regional protection available)*: ARIPO (BW, GH, GM, KE, LR, LS, MW, MZ, NA, RW, SD, SL, ST, SZ, TZ, UG, ZM, ZW), Eurasian (AM, AZ, BY, KG, KZ, RU, TJ, TM), European (AL, AT, BE, BG, CH, CY, CZ, DE, DK, EE, ES, FI, FR, GB, GR, HR, HU, IE, IS, IT, LT, LU, LV, MC, MK, MT, NL, NO, PL, PT, RO, RS, SE, SI, SK,

[Continued on next page]

(54) Title: COMPUTER WITH BAFFLES DIRECTING AND SEPARATING AIR FLOW FOR HIGH COOLING

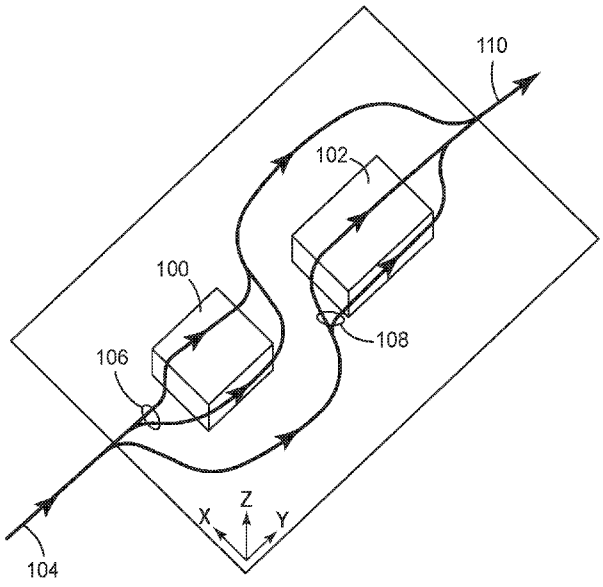

FIG. 1

(57) Abstract: A baffle assembly directing air flow for cooling electrical components by providing three-dimensional separation of the air flow for individual cooling air streams. The assembly includes a first baffle portion composed of a conduit of material and a second baffle portion composed of a sheet of material and coupled to the first baffle portion. The first baffle portion directs a first portion of the air flow to a first electrical component for cooling the first electrical component and directs a second portion of the air flow around the first electrical component to maintain a cool air stream. The second baffle portion directs the first portion of the air flow around a second electrical component as waste heat and directs the second portion of the air flow to the second electrical component for cooling the second electrical component.

WO 2017/123486 A1

SM, TR), OAPI (BF, BJ, CF, CG, CI, CM, GA, GN, GQ, GW, KM, ML, MR, NE, SN, TD, TG).

Declarations under Rule 4.17:

— *as to applicant's entitlement to apply for and be granted a patent (Rule 4.17(ii))*

Published:

— *with international search report (Art. 21(3))*

COMPUTER WITH BAFFLES DIRECTING AND SEPARATING AIR FLOW FOR HIGH COOLING

BACKGROUND

Data servers produce a tremendous amount of heat in a small volume, creating an engineering challenge to efficiently provide cooling and manage the waste heat created by the server. In medium to large data server installations, there is the opportunity and challenge of managing between one to about fifty megawatts of waste heat. In general, the higher the temperature difference of the cooling fluid entering and exiting the servers, the less expensive it is to provide cooling air. This expense includes the cost of cooling, filtration, and the substantial amount of energy consumed moving air. A large temperature difference also increases exergy, or the possibility to extract and recover energy from the heated air.

Current designs for cooling commonly use a forced-air cooling system often with a combination of local cooling fans and baffles to concentrate cooling where needed. This provides limited flexibility in controlling temperatures of different components, especially where high-heat dissipating components are up-stream of either temperature-sensitive or other high-heat dissipating components.

All servers benefit from increased cooling efficiency due to lower power consumption, longer component life for heat-sensitive components, reduced noise and vibration. Accordingly, a need exists for an improved assembly of baffles to manage cooling air within servers or with other electrical components.

SUMMARY

A baffle assembly directing air flow for cooling electrical components, consistent with the present invention, includes a first baffle portion composed of a conduit of material and a second baffle portion composed of a sheet of material and coupled to the first baffle portion. The first baffle portion directs a first portion of a source of air flow to a first electrical component for cooling the first electrical component and directs a second portion of the air flow around the first electrical component. The second baffle portion directs the first portion of the air flow around a second electrical component, located

proximate the first electrical component, and directs the second portion of the air flow to the second electrical component for cooling the second electrical component.

BRIEF DESCRIPTION OF THE DRAWINGS

The accompanying drawings are incorporated in and constitute a part of this specification and, together with the description, explain the advantages and principles of the invention. In the drawings,

FIG. 1 is a diagram illustrating three-dimensional direction and separation of air flow for cooling electrical components;

FIG. 2 is a diagram illustrating components of a server requiring cooling;

FIG. 3 is a perspective view of a baffle assembly to manage air flow for cooling the components of the server in FIG. 2;

FIG. 4 is a perspective view illustrating the baffle assembly of FIG. 3 arranged within the server of FIG. 2;

FIG. 5 is a first side sectional view illustrating use of baffle portions to separate cool incoming air from heated waste air to cool electronic components;

FIG. 6 is a second side sectional view illustrating use of baffle portions to separate cool incoming air from heated waste air to cool electronic components; and

FIG. 7 a third side sectional view illustrating use of baffle portions to separate cool incoming air from heated waste air to cool electronic components.

DETAILED DESCRIPTION

Embodiments of the present invention include a baffle assembly creating three-dimensional separation of air for cooling electrical components within a server or for other cooling purposes. The server includes an electronic assembly having heat sources from electrical components and the system, where the heat sources are spaced from each other throughout a volume defined by a chassis. Cooling air enters one part of the chassis, and heated air is removed from another part of the chassis. The baffle separates air that was heated by electrical components from the cooler intake air. Furthermore, the baffle can provide for cooling air to flow along a primary circuit board and heated air to flow preferentially along a plane parallel and separated from the circuit board.

FIG. 1 is a diagram illustrating three-dimensional separation of air flow for cooling electrical components. In this example, an electrical component 100 is located up-stream from an electrical component 102. An incoming stream of cool air 104 is separated into two streams 106 and 108 by baffle portions or by effective laminar flow or momentum. Air stream 106 is directed over electrical component 100 in physical contact with it in order to draw heat away from component 100 for cooling it. Air stream 106, now waste heat from component 100, is then directed over and not in physical contact with electrical component 102. Air stream 108 is directed around and not in physical contact with electrical component 100 such that air stream 108 is not heated by component 100 and remains a relatively cool air stream from incoming cool air 104. Air stream 108 is then directed over electrical component 102 in physical contact with it in order to draw heat away from component 102 for cooling it. Air stream 108, now waste heat from component 102, may be then combined with air stream 106 to form a combined air stream 110 drawn away from components 100 and 102, for example by a fan.

As illustrated, air flow occurs generally along the Y-direction and is separated or directed in the X- and Z-directions. Air flow 104 is separated laterally in the X-direction to create air streams 106 and 108 for individually cooling electrical components 100 and 102. Air stream 106 is directed in the Z-direction to traverse over and not in contact with electrical component 102 to be discharged as waste heat. Air stream 106 may also flow at least partially above air stream 108. In addition to directing air flow, the baffles or baffle portions can be used to create a pressure differential above and below components for use in moving air to cool them.

By using three-dimensional separation of air flow, the incoming cool air flow 104 can divided to separately cool electrical components 100 and 102. In particular, waste heat from cooling component 100 is not directed in physical contact with component 102; rather, a separate cool air stream is created from air flow 104 to cool component 102. This type of separation of air flow is particularly useful when, as in this example, electrical components are within the same air flow path, one up-stream of the other. Alternatively the air stream can be divided in other ways for separately cooling components using the same original cool air flow. Examples of baffles to create this three-dimensional separation of air flow are described below.

FIG. 2 is a diagram illustrating components of a server 200 requiring cooling. Server 200 includes the following components: electrical components 218 and 418; random access memory (RAM) modules 214 and 215; central processing units (CPUs) 314 and 315; and electrical loads 210, 211, and 310. For cooling the electrical components, server 200 includes a fan array 205 and vents 203. Fan array 205 draws air into server 200 from vents 203 for use in cooling the electrical components. Fan array 205 can be positioned either on the air delivery or removal ends of the server, or both, or alternatively the air can be provided by a forced air system common to multiple servers. The fan array can have one or more fans. Server 200 is shown in simplified form to illustrate the electrical components requiring cooling and would also include other components.

FIG. 3 is a perspective view of a baffle assembly to manage air flow for cooling of the components of server 200 in FIG. 2. This exemplary assembly includes an upper baffle 206 and lower baffle 207. Upper baffle 206 and lower baffle 207 are formed as a sheet of material at least partially planar, and upper baffle 206 may be at least partially joined together with lower baffle 207. Conduit baffles 230, 232, and 234 are coupled to upper baffle 206 or lower baffle 207, or both. Conduit baffles 230, 232, and 234 create an air flow path through upper baffle 206. These conduit baffles can provide for the three-dimensional separation of air flow for cooling components as illustrated above. The assembly also includes baffle housings 209 for use in shielding down-stream components from waste heat air flow.

FIG. 4 is a perspective view illustrating the baffle assembly of FIG. 3 arranged within server 200 of FIG. 2. As shown in FIG. 4, lower baffle 207 is arranged over RAM modules 214 and 215, and upper baffle 206 is arranged over CPUs 314 and 315. Conduit baffles 230, 232, and 234 are arranged over, respectively, loads 210, 310, and 211. Baffle housings 209 fit over electrical components 218 and 418.

FIGS. 5-7 are side sectional views at different locations of the baffle assembly installed within server 200, as shown in FIG. 4, and illustrating use of the baffles or baffle portions to separate cool incoming air from heated waste air to cool electronic components.

FIG. 5 shows server 200 with cool incoming air stream 202, which would enter server 200 through vents 203, heated exhaust air stream 204 with the air at least partly

moved by fan array 205. Upper baffle 206 at least partially separates the cool air stream 202 from heated air stream 204. Preferably upper baffle 206 covers at least 25% of the area of the circuit boards or other electrical components underneath it (see FIGS. 2 and 4), more preferably at least 50% of the area, most preferably at least 75%. Upper baffle 206 directs cool air stream 212 from region 208 over heated component 210 via conduit baffle 230 to a region above upper baffle 206. Also, cool air stream 216 is heated by component 214 and directed by upper baffle 206 to a region above baffle 206 and above baffle housing 209. Cool air stream 220 is directed through heated component 218. Heated air from the component 218 is merged with heated air 222 from above baffles 206 and 209 to form waste heat air stream 224, which is exhausted from the system by fan array 205.

FIG. 6 shows a cross-sectional view from another position of server 200 with the baffle assembly installed. In this view, cool air stream 312 from region 208 is heated by component 310, and the heated air stream from component 310 is preferentially removed via conduit baffle 232 to be above upper baffle 206 as waste heat 318. Cool air stream 316 is heated by component 314, and the heated air stream is brought above lower baffle 207. In this cross-sectional view, the heated waste air streams from components 310 and 314 are combined above lower baffle 207 into region 320, and exhausted by fan array 205 to form heated air stream 204.

FIG. 7 shows a cross-sectional view from yet another position of server 200 with the baffle assembly installed. In this view, cool air stream from region 208 is drawn as air stream 412 through an air channel 410 under lower baffle 207 to provide cool air to a region 414. Cool air 414 cools component 418 covered by baffle housing 209, the heated air of which is moved to a section 219 and exhausted from the system by fan array 205 to form heated air stream 204.

The following are exemplary materials, components, and configurations for the baffle assemblies described herein.

The baffle can be made from metal, plastic, or ceramics, or a combination thereof. Standard forming operations can be used to form the material into the final shape required for the baffle assembly. These forming operations can include stamping, injection molding, thermoforming, 3D printing, or the like. The baffle assembly can have various surfaces and conduits to direct air streams as desired. For example, the baffle assembly can have baffles formed from a sheet of material having opposing major surfaces with

edges and have other baffles formed as a conduit. The baffles as sheets of material can be at least partially joined together via their edges or at the major surfaces. The conduits can be joined with the baffles as sheets of material at apertures in the major surfaces or at the edges, providing an air passage. The conduits, such as the conduit baffles described above, can have a round cross-sectional shape or other cross-sectional configurations. The configuration of the baffle surfaces can depend, for example, upon the configuration of electrical components to be cooled with the baffle surfaces providing for three-dimensional separation of air flow for the cooling.

The baffle can include acoustic and vibration absorbing materials, including copolymer plastics, foams, and polymers with structured surfaces. The material for the baffle can be fire-retardant or fire-suppressing. The baffle surfaces can be antistatic to inhibit dust accumulation and to reduce the risk of static discharge in handling or operation. Furthermore, the baffle material can be thermally insulating and have an anti-fouling surface coating. The baffle may be made from a combination of thermally conductive and thermally insulating materials. For example, the baffle may be constructed from a thermal insulator such as a polymer sheet, or more preferably a foamed polymer sheet and laminated to a metal sheet such as aluminum. Preferably the insulating side of the laminate will be in contact with the air stream that is relatively cool, and the metal side in contact with the air stream that is heated. The metal may have similar geometry as the insulating material, or the metal may be only laminated to a portion of the insulator. The metal may also be bonded or connected to thermal sources in the device, including semiconductor packages or an attached heat sink, or both, such that heat from the semiconductor package is at least partially dissipated by the metal sheet. The metal sheet may have all or a portion of the surface exposed to air and be structured with, for example, fins or pins to increase heat dissipation rates. The baffle can contain thermally responsive or controllable materials or components. These controllable features allow the baffle to direct air to different components depending on specific requirements. The controllable features can also be achieved by using shape memory materials.

The baffle or baffle portions can separate air flow, direct air flow, or both separate and direct air flow, in three different directions (e.g., X-Y-Z mutually orthogonal directions). The baffle or baffle portions can also separate cool air from heated air in at least two, and possibly three, different directions (e.g., X-Y, X-Z, Y-Z, or X-Y-Z mutually

orthogonal directions). The baffles or baffle portions can fully cover or partially cover components to be cooled, and the baffle portions can be shaped to conform to a shape of the components to be cooled. The baffles can include any individual component shaped to fulfill this separation or direction of air flow.

The baffle portions can be used in a method for directing air flow to cool components, including the steps of providing first and second air flow paths by using the baffle portions directing air along the first and second air flow paths to cool the components, directing cool air via the baffle portions for the cool air to traverse along the first air flow path, and directing heated air via the baffle portions for the heated air to traverse along the second air flow path. The baffle portions cover at least 25%, or 50%, or 75% of the area of the components.

The baffle portions can also be used in a method for directing air flow to cool components, including the steps of providing first and second air flow paths with a primary horizontal plane by using the baffle portions directing air along the first and second air flow paths to cool the components, and separating relatively cool air from relatively hot air in a vertical axis of the horizontal plane via the baffle portions. The baffle portions can cover at least 25%, or 50%, or 75% of the area of the components.

The baffle material can also include electromagnetic interference (EMI) absorbing or reflecting components, or both, in order to reduce interference between components and circuitry. The position of the baffle in the system provides for an opportunity to suppress standing EMI waves within the server chassis.

CLAIMS

1. A baffle assembly directing air flow for cooling electrical components, comprising:

a first baffle portion composed of a conduit of material, wherein the first baffle portion directs a first portion of a source of air flow to a first electrical component for cooling the first electrical component and directs a second portion of the air flow around the first electrical component; and

a second baffle portion composed of a sheet of material and coupled to the first baffle portion, wherein the second baffle portion directs the first portion of the air flow around a second electrical component, located proximate the first electrical component, and directs the second portion of the air flow to the second electrical component for cooling the second electrical component.

2. The baffle assembly of claim 1, wherein the first baffle portion has a round cross-sectional shape.

3. The baffle assembly of claim 1, wherein the second baffle portion has at least a partially planar shape.

4. The baffle assembly of claim 1, wherein the first and second baffle portions are each composed of a metal material.

5. The baffle assembly of claim 1, wherein the first and second baffle portions are each composed of a plastic material.

6. The baffle assembly of claim 1, wherein the first and second baffle portions are each composed of a ceramic material.

7. The baffle assembly of claim 1, wherein the first baffle portion is situated over the first electrical component.

8. The baffle assembly of claim 1, wherein the second baffle portion is situated over the second electrical component.

9. The baffle assembly of claim 1, wherein the first and second baffle portions each include electromagnetic interference absorbing or reflecting components.

10. The baffle assembly of claim 1, wherein the first and second baffle portions are each composed of acoustic and vibration absorbing materials.

11. The baffle assembly of claim 1, wherein the first and second baffle portions each include a coating having at least one of the following properties: fire-retardant or fire-suppressing; antistatic; or anti-fouling.

12. A method for directing air flow to cool components, comprising:

providing first and second air flow paths by using baffle portions directing air along the first and second air flow paths to cool the components;

directing cool air via the baffle portions for the cool air to traverse along the first air flow path; and

directing heated air via the baffle portions for the heated air to traverse along the second air flow path,

wherein the baffle portions cover at least 25%, or 50%, or 75% of the area of the components.

13. A method for directing air flow to cool components, comprising:

providing first and second air flow paths with a primary horizontal plane by using baffle portions directing air along the first and second air flow paths to cool the components; and

separating relatively cool air from relatively hot air in a vertical axis of the horizontal plane via the baffle portions,

wherein the baffle portions cover at least 25%, or 50%, or 75% of the area of the components.

14. A system having baffle portions directing air flow to cool components, comprising the baffle assembly of claim 1; and
a circuit board with distributed heat sources,
wherein the baffle assembly directs air flow to cool the heat sources,
wherein the baffle assembly cover at least 25%, or 50%, or 75% of the area of the heat sources.

15. A baffle system comprised of one or more individual parts which separate air flow, direct air flow, or both separate and direct air flow in three different directions.

16. The baffle system of claim 15, wherein the three different directions are X-Y-Z mutually orthogonal directions.

17. An individual component shaped to fulfill the separation or direction of air flow in claim 15.

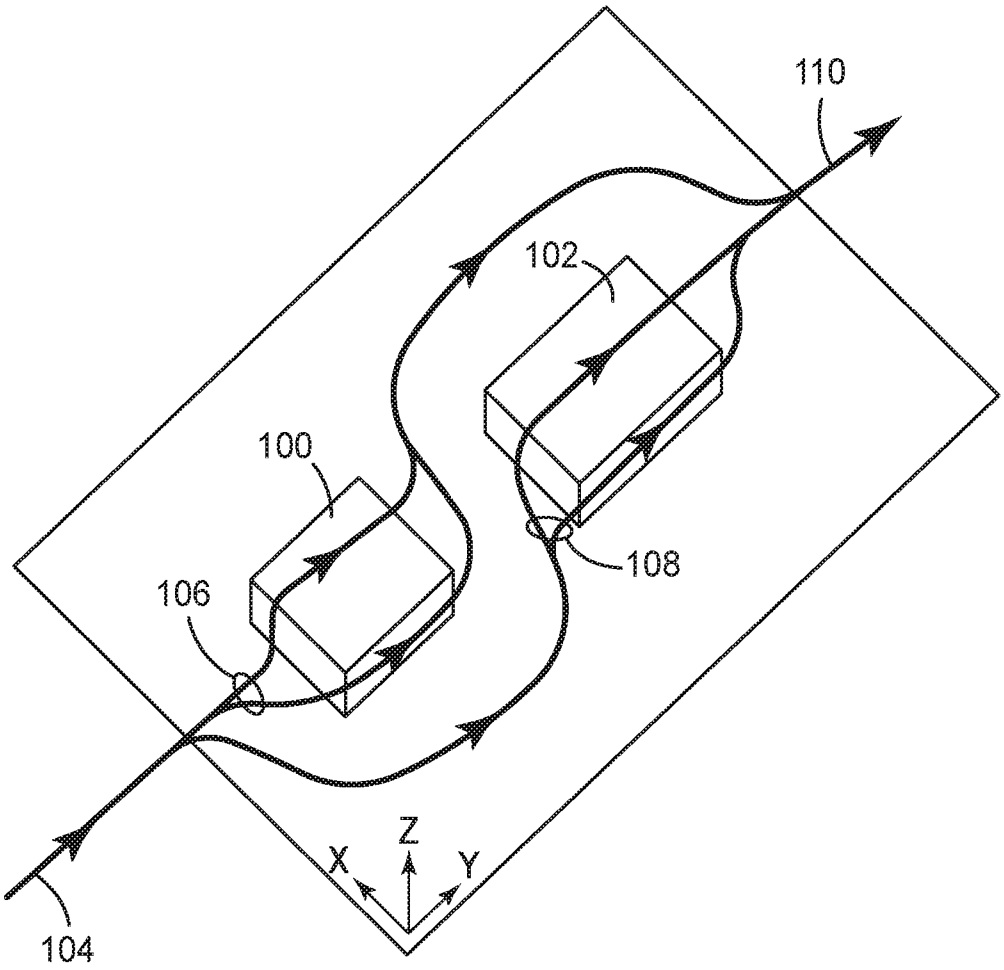

FIG. 1

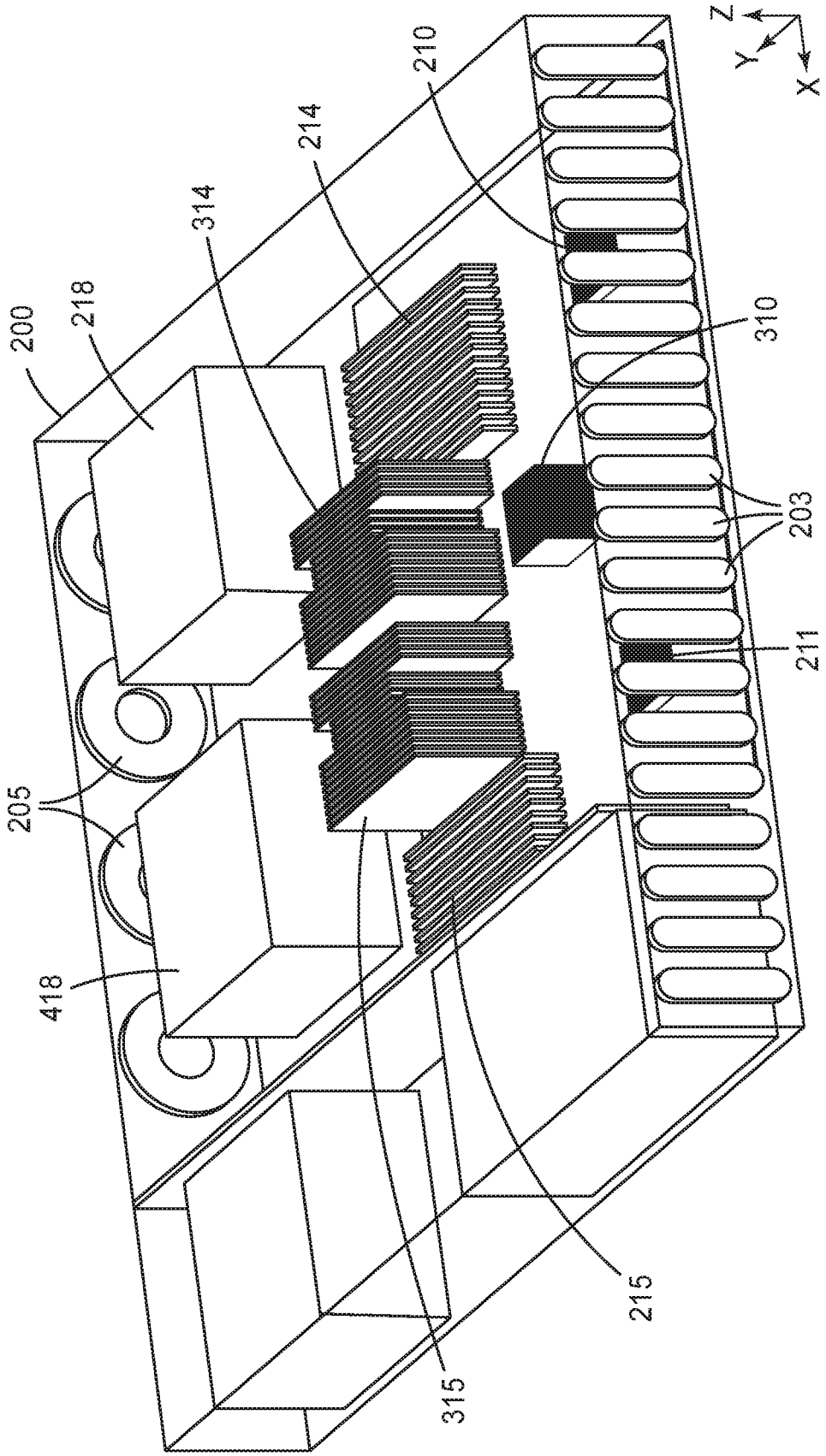

FIG. 2

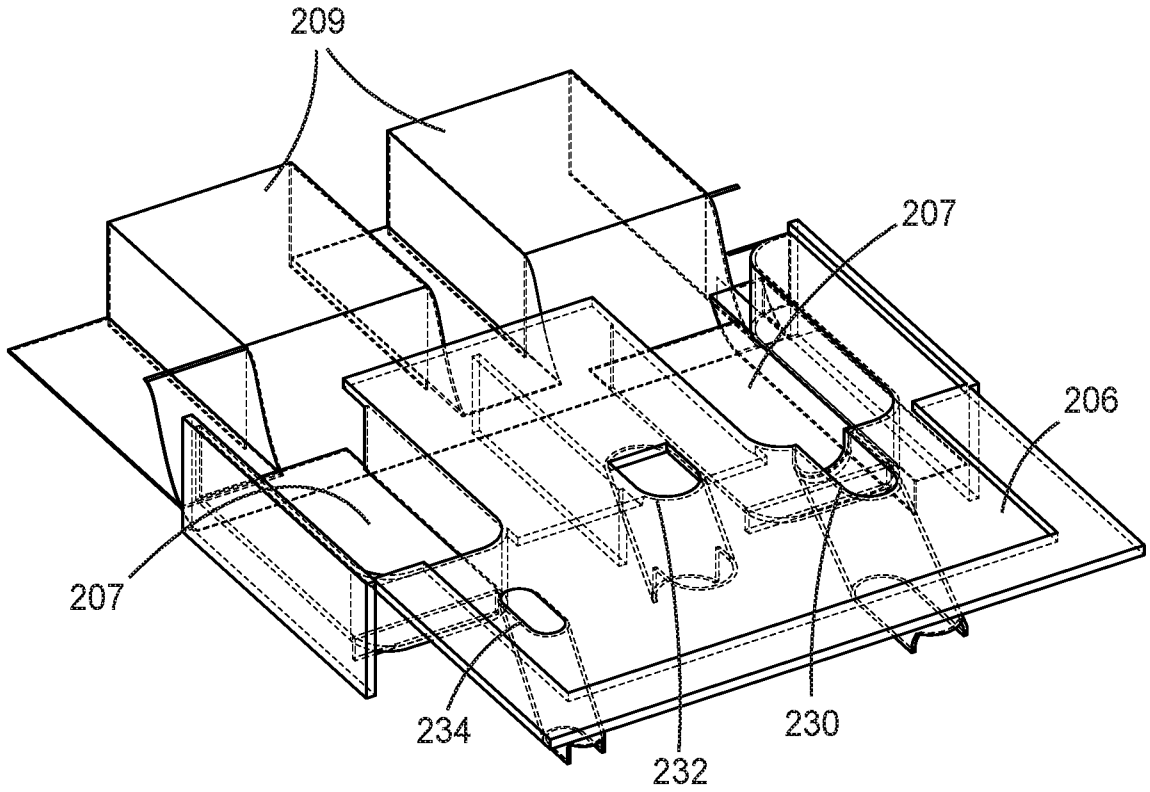
209
207
206
207
234
232
230

FIG. 3

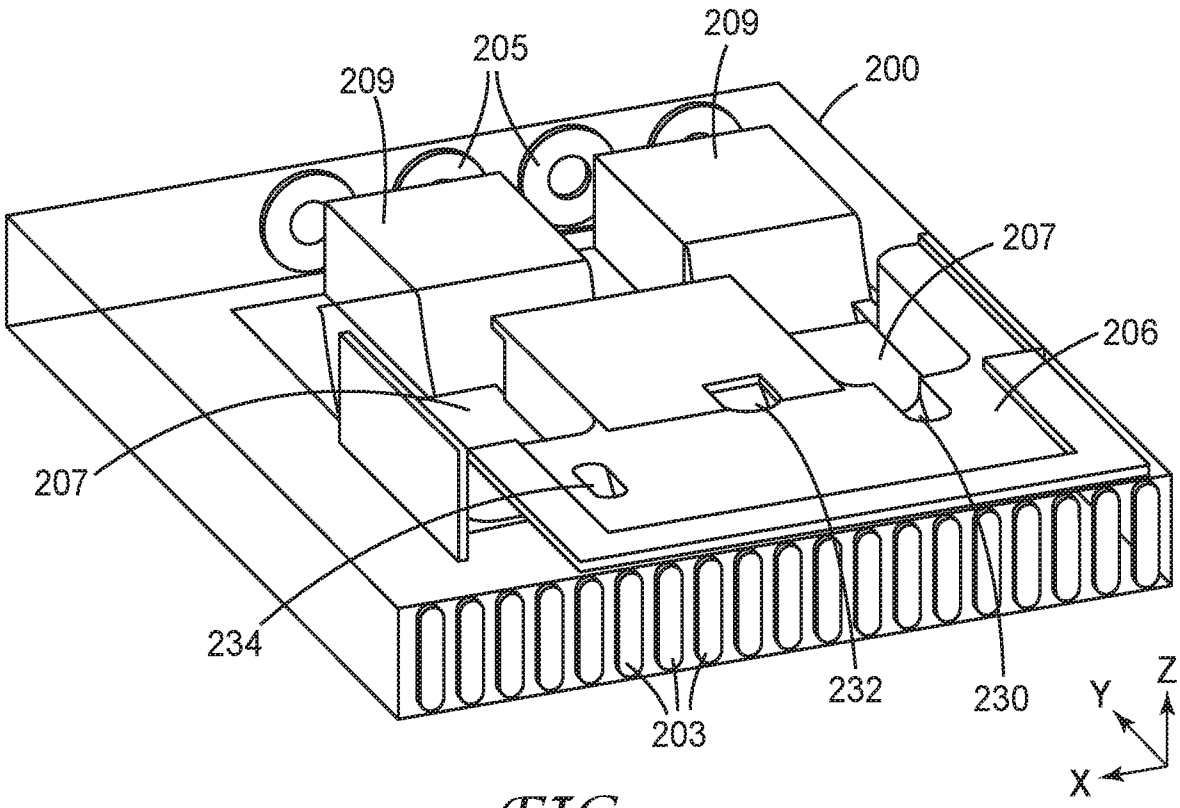
209
205
209
200
207
206
207
234
232
230
203
Z
Y
X

FIG. 4

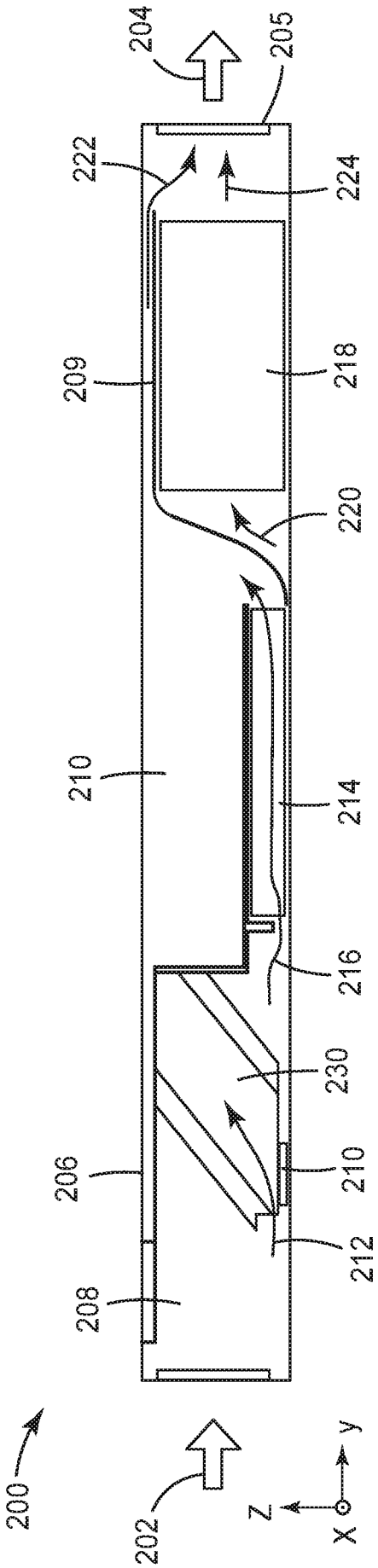
200
202
204
205
206
208
209
210
212
214
216
218
220
222
224
230
z
y
x

FIG. 5

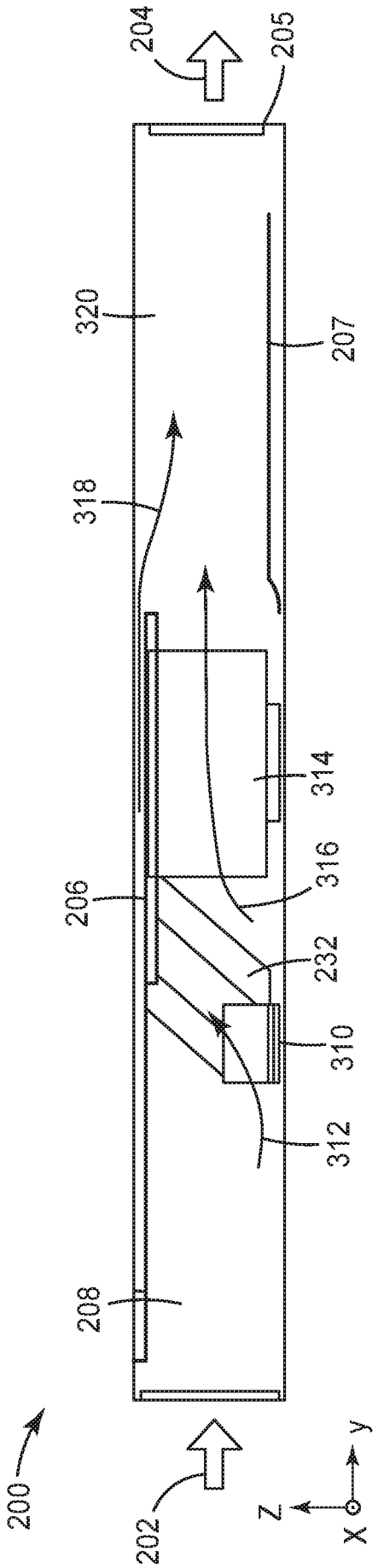
200
202
204
205
206
207
208
310
312
314
316
318
320
232
z
y
x

FIG. 6

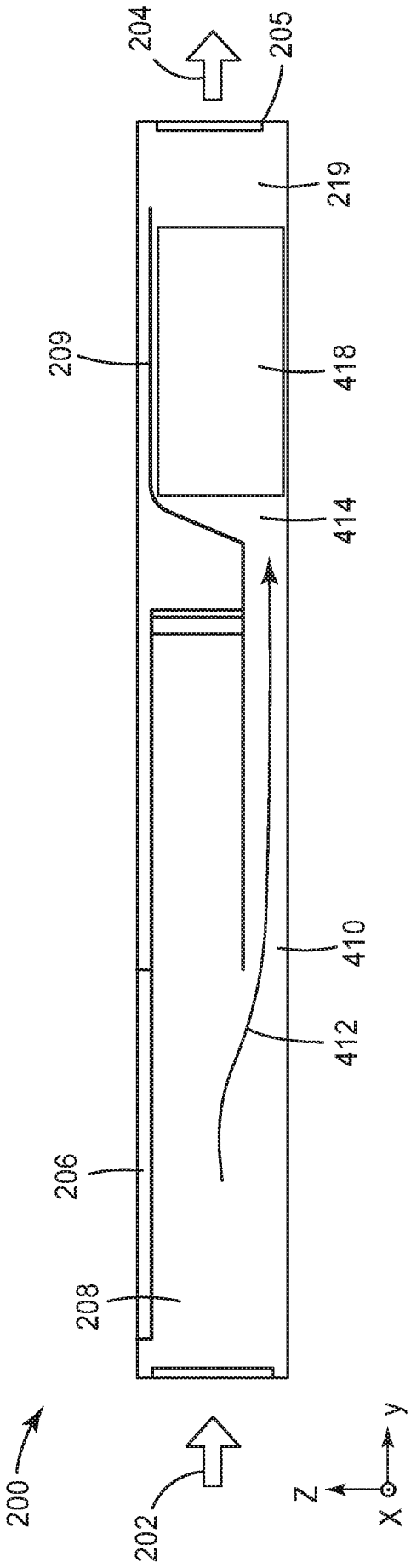

FIG. 7

INTERNATIONAL SEARCH REPORT

International application No.
PCT/US 17/12672

A. CLASSIFICATION OF SUBJECT MATTER
IPC(8) - G06F 1/20 (2017.01)
CPC - G06F 1/20
According to International Patent Classification (IPC) or to both national classification and IPC

B. FIELDS SEARCHED

Minimum documentation searched (classification system followed by classification symbols)
IPC (8): G06F 1/20 (2017.01)
CPC: G06F 1/20

Documentation searched other than minimum documentation to the extent that such documents are included in the fields searched
IPC (8): G06F 1/20 (2017.01) USPC: 361/679.5,679.51,694,695,697,703; 165/104.33,135,139,164 CPC: G06F 1/20; H05K 7/20145,7/20181,7/205 (keyword limited; terms below)

Electronic data base consulted during the international search (name of data base and, where practicable, search terms used)
PatBase; PubWEST (PGPB,USPAT,USOC,EPAB,JPAB); Google (Patents,Scholar,Web) Search terms used: baffle first second electrical cool computer direct air flow to around component electronic above divide metal plastic ceramic electromagnetic interference absorb reflect acoustic vibration fire retardant suppress antistatic etc.

C. DOCUMENTS CONSIDERED TO BE RELEVANT

Category*	Citation of document, with indication, where appropriate, of the relevant passages	Relevant to claim No.
X --- Y	US 7,848,101 B2 (DEY et al.) 07 December 2010 (07.12.2010), entire document, especially Fig 1, 2, 8; col 1, ln 54-60; col 2, ln 4-8, ln 43-47, ln 63-67; col 3, ln 4-8, ln 13-22; col 4, ln 16-17, ln 24-27; col 6, ln 18-22	1-4, 7, 8, 12-14 ---------- 5, 6, 9-11
X	US 5,694,294 A (OHASHI et al.) 02 December 1997 (02.12.1997), entire document, especially Fig 4; col 40-57	15-17
Y	US 6,744,632 B2 (WILSON et al.) 01 June 2004 (01.06.2004), col 2, ln 21-27	5, 11
Y	US 2014/0087286 A1 (FISHER et al.) 27 March 2014 (27.03.2014), para [0052]	6
Y	US 7,667,984 B2 (MORTENSEN et al.) 23 February 2010 (23.02.2010), col 1, ln 12-14; col 2, ln 2-4	9
Y	US 7,549,505 B1 (KAWAR) 23 June 2009 (23.06.2009), col 1, ln 50-52; col 2, ln 29-34	10
A	US 4,174,065 A (KNAUTH) 13 November 1979 (13.11.1979), entire document	1-17
A	US 5,813,243 A (JOHNSON et al.) 29 September 1998 (29.09.1998), entire document	1-17
A	US 5,914,857 A (JOHNSON et al.) 22 June 1999 (22.06.1999), entire document	1-17
A	US 6,262,891 B1 (WICKELMAIER et al.) 17 July 2001 (17.07.2001), entire document	1-17
A	US 6,843,699 B1 (SALMONSON et al.) 19 November 2002 (19.11.2002), entire document	1-17

☐ Further documents are listed in the continuation of Box C. ☐

* Special categories of cited documents:
"A" document defining the general state of the art which is not considered to be of particular relevance
"E" earlier application or patent but published on or after the international filing date
"L" document which may throw doubts on priority claim(s) or which is cited to establish the publication date of another citation or other special reason (as specified)
"O" document referring to an oral disclosure, use, exhibition or other means
"P" document published prior to the international filing date but later than the priority date claimed
"T" later document published after the international filing date or priority date and not in conflict with the application but cited to understand the principle or theory underlying the invention
"X" document of particular relevance; the claimed invention cannot be considered novel or cannot be considered to involve an inventive step when the document is taken alone
"Y" document of particular relevance; the claimed invention cannot be considered to involve an inventive step when the document is combined with one or more other such documents, such combination being obvious to a person skilled in the art
"&" document member of the same patent family

Date of the actual completion of the international search	Date of mailing of the international search report
08 March 2017	31 MAR 2017
Name and mailing address of the ISA/US Mail Stop PCT, Attn: ISA/US, Commissioner for Patents P.O. Box 1450, Alexandria, Virginia 22313-1450 Facsimile No. 571-273-8300	Authorized officer: Lee W. Young PCT Helpdesk: 571-272-4300 PCT OSP: 571-272-7774