United States Patent [19]

Bernstein

[11] **3,829,999**

[45] **Aug. 20, 1974**

[54] **ILLUMINATED MODULAR TYPE SIGN**

[75] Inventor: **Lawrence A. Bernstein,** Knoxville, Tenn.

[73] Assignee: **Dart Industries, Inc.,** Los Angeles, Calif.

[22] Filed: **June 6, 1969**

[21] Appl. No.: **831,005**

[52] **U.S. Cl.** ..... **40/125 H,** 40/145, 40/130 R, 52/648

[51] **Int. Cl.** **G09t 7/00**

[58] **Field of Search** ..... 40/125 H, 145; 46/29, 31; 52/648

[56] **References Cited**

UNITED STATES PATENTS

1,918,570	7/1933	Sheras	40/145
2,364,083	12/1944	Lindsay	52/648 X
2,772,494	12/1956	Bishop	40/125 H
2,907,544	10/1959	Harling	40/145 UX
2,917,188	12/1959	Menin	40/125 UX
2,940,606	6/1960	Kurnitz	40/125 H X
3,238,654	3/1966	Rosenak et al.	40/130 X

FOREIGN PATENTS OR APPLICATIONS

1,572,960	5/1969	France	40/125 H

Primary Examiner—J. H. Wolfe

[57] **ABSTRACT**

An illuminable sign, display or decorative assembly whose construction is based upon a modular concept. The structural framework, reflectors, display panels and electrical components each incorporate this basic concept and so provide relatively small constructable units that can be cooperatively connected to form varying sized assemblies. In addition, an underground mounting system includes dual floating supports that will securely maintain such assemblies in an upright orientation.

10 Claims, 31 Drawing Figures

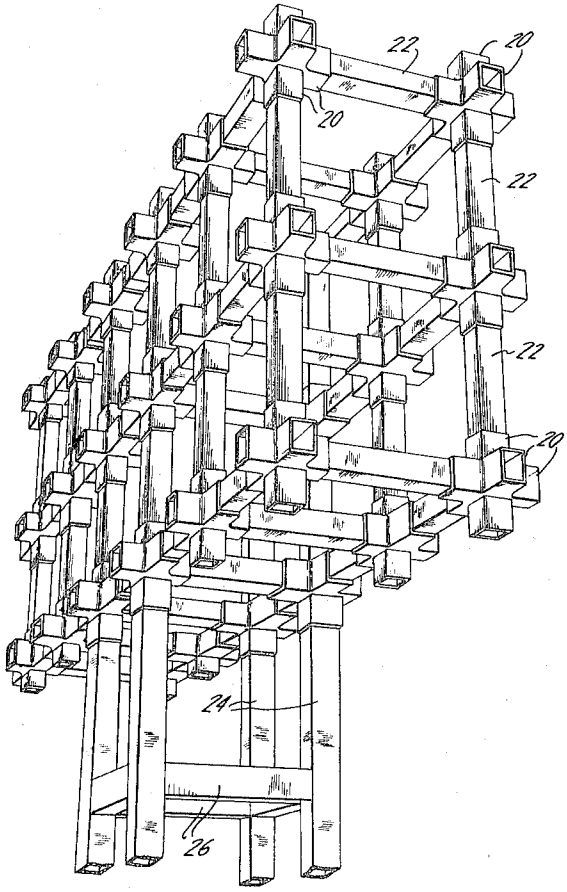

FIG. 1

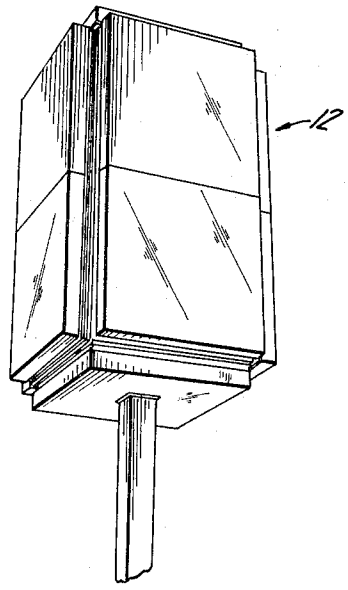

FIG. 2

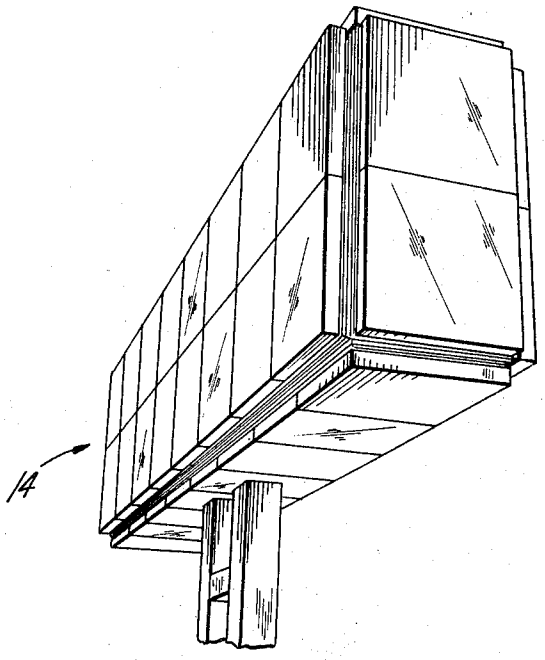

FIG. 3

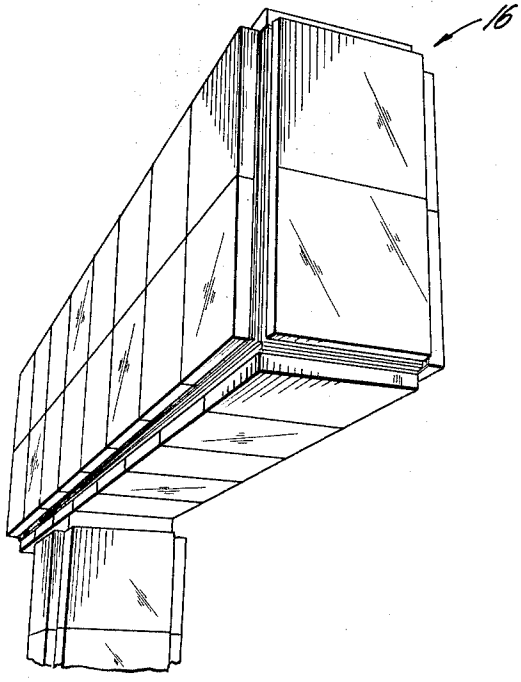

FIG. 4

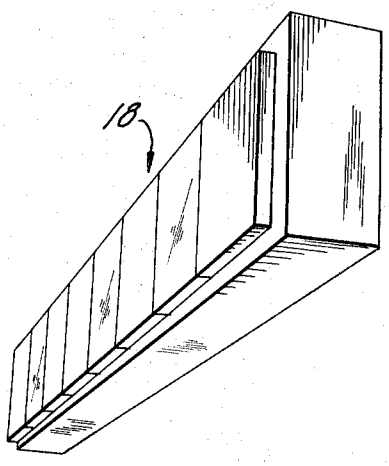

INVENTOR
LAWRENCE A. BERNSTEIN
BY
Leigh B. Taylor
ATTORNEY

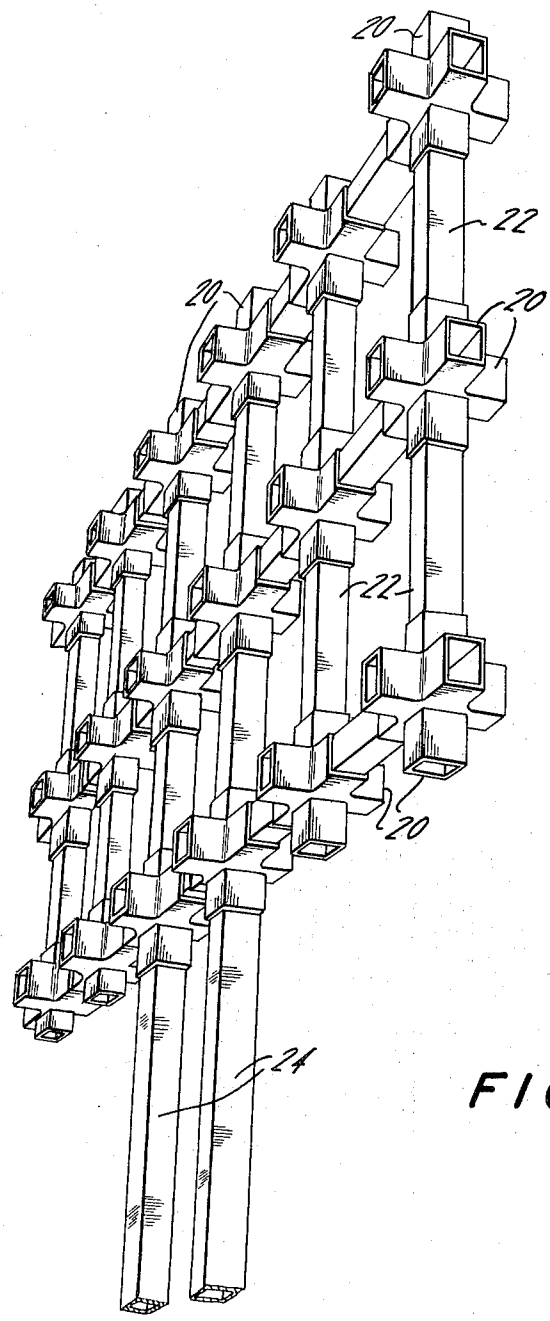

FIG. 5

INVENTOR.
LAWRENCE A. BERNSTEIN
BY
Leigh B. Taylor
ATTORNEY

FIG. 6

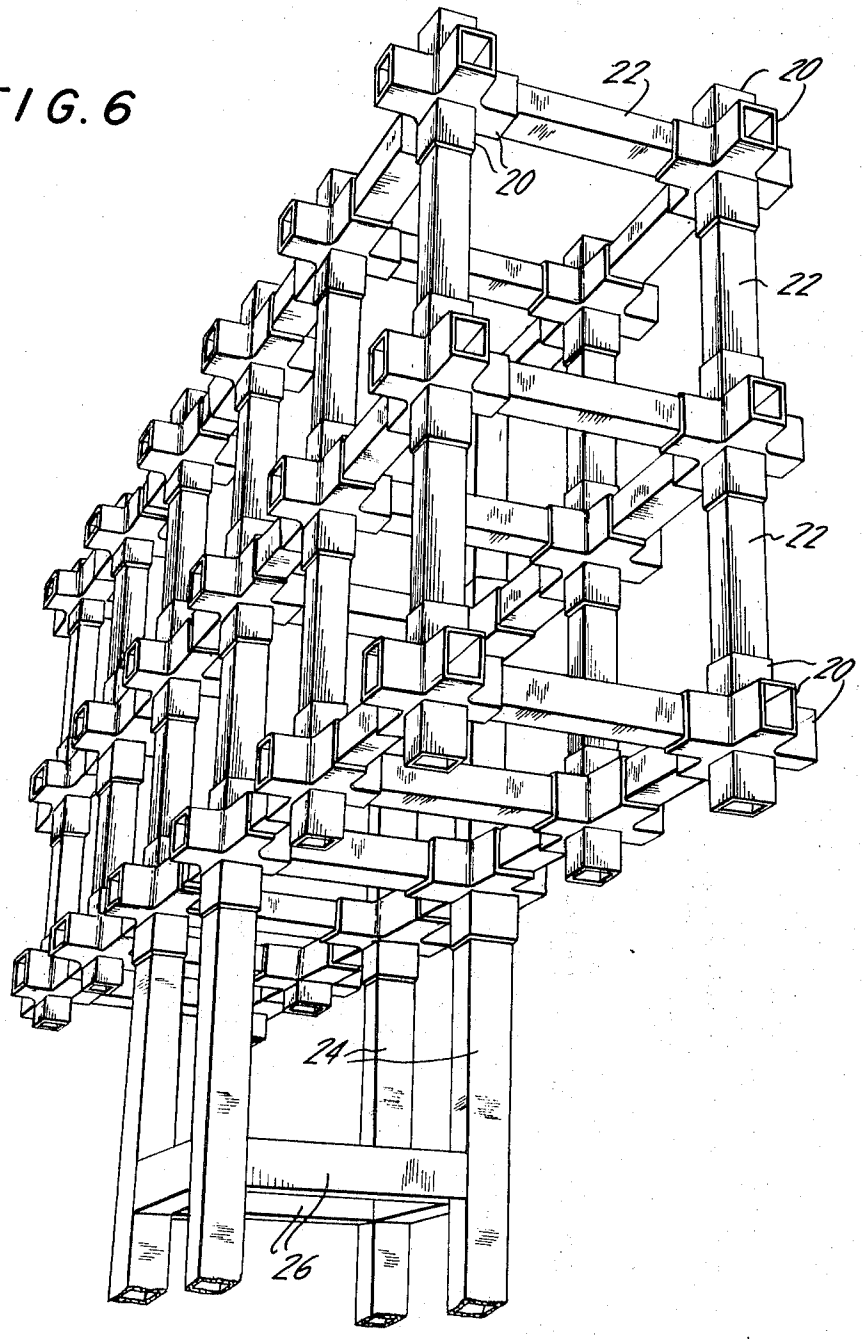

INVENTOR.
LAWRENCE A. BERNSTEIN
BY
Leigh B. Taylor
ATTORNEY

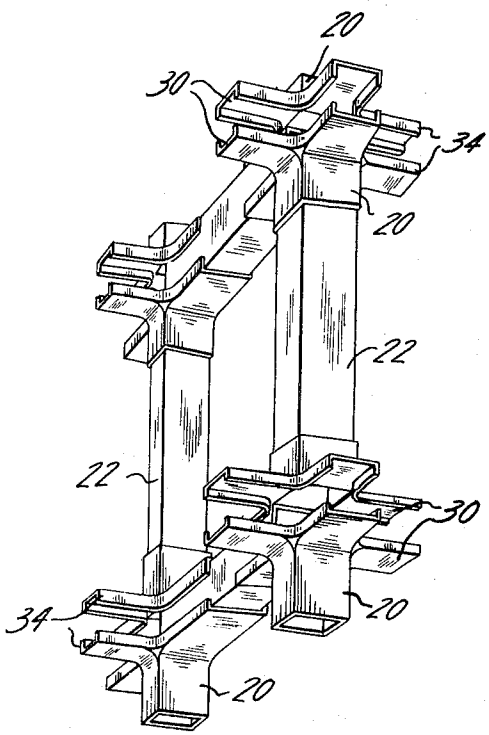

FIG. 8

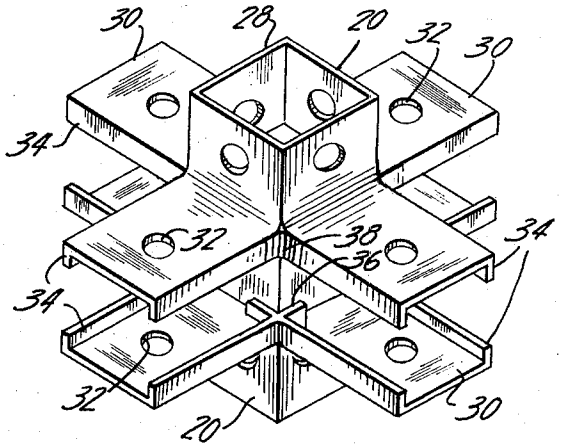

FIG. 7

FIG. 11

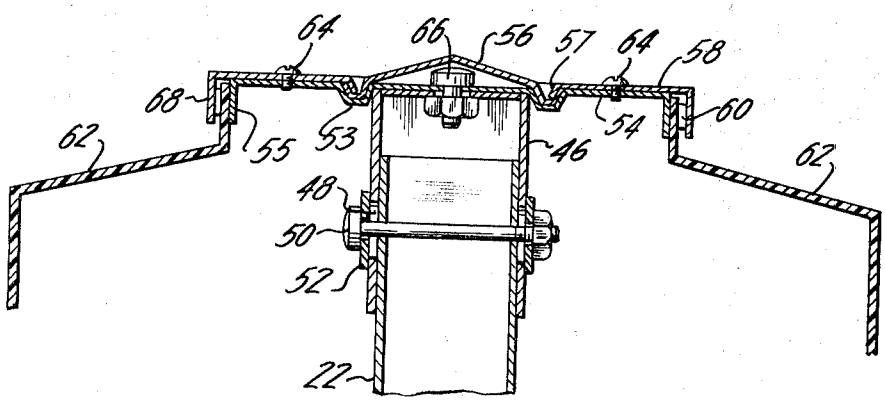

INVENTOR.
LAWRENCE A. BERNSTEIN
BY
Leigh B. Taylor
ATTORNEY

FIG. 9

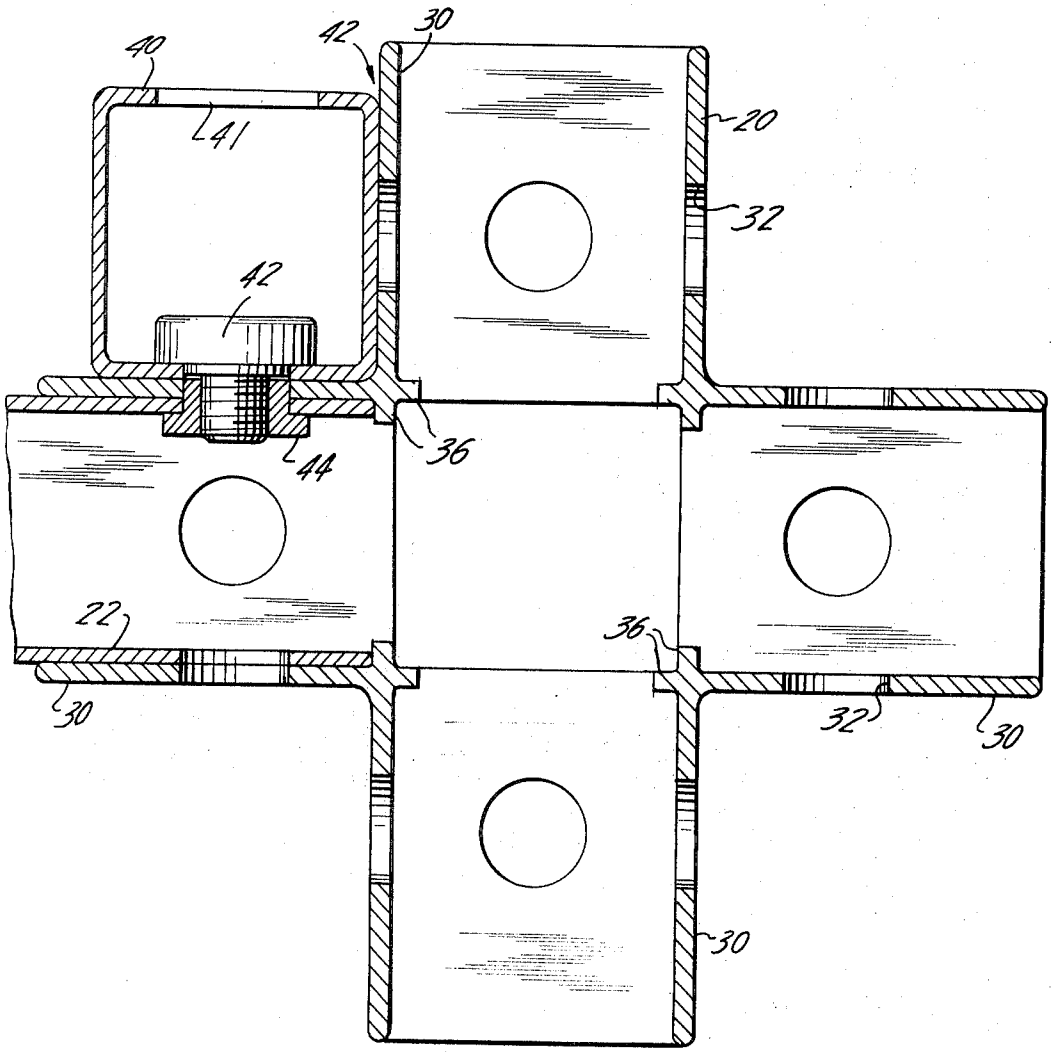

INVENTOR.
LAWRENCE A. BERNSTEIN
BY
Leigh B. Taylor
ATTORNEY

FIG. 10

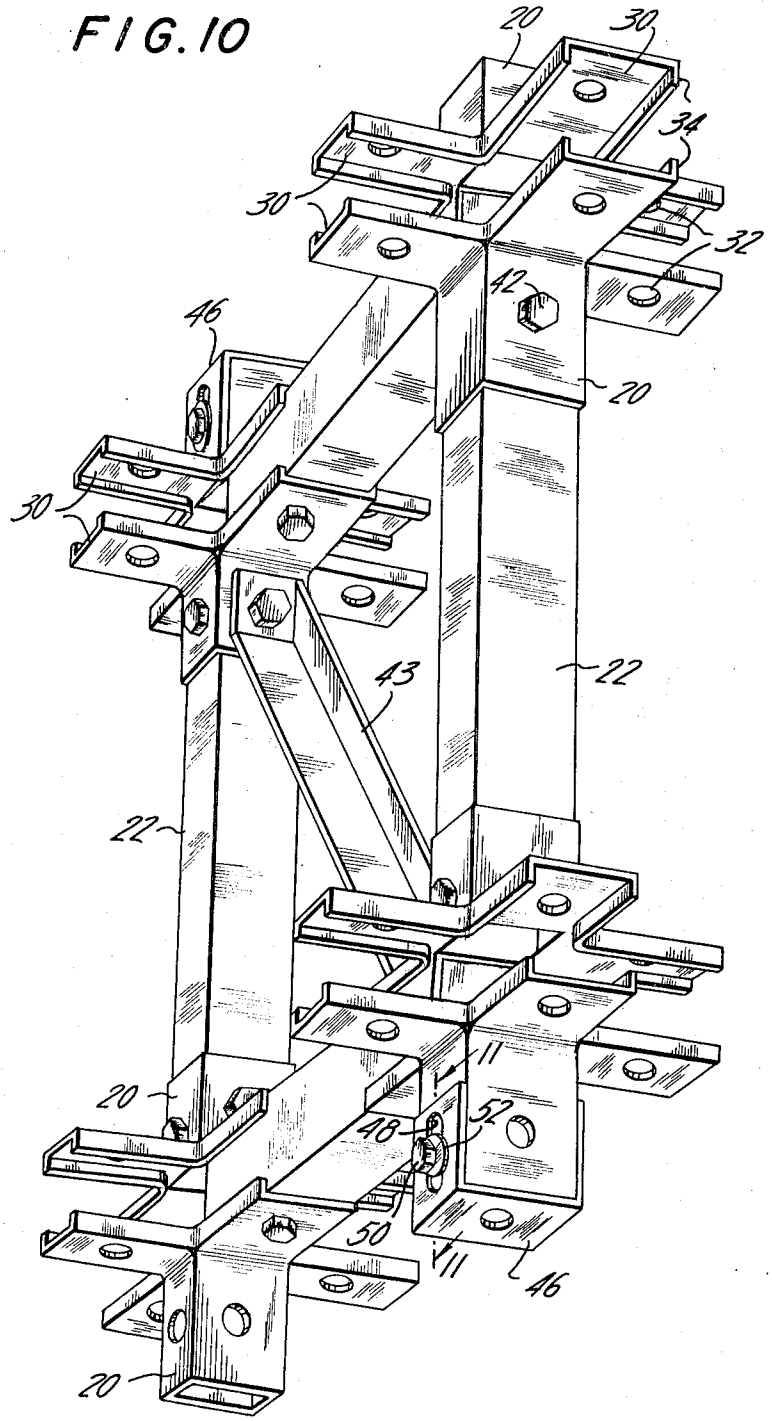

INVENTOR
LAWRENCE A. BERNSTEIN
BY Leigh B. Taylor
ATTORNEY

FIG. 12

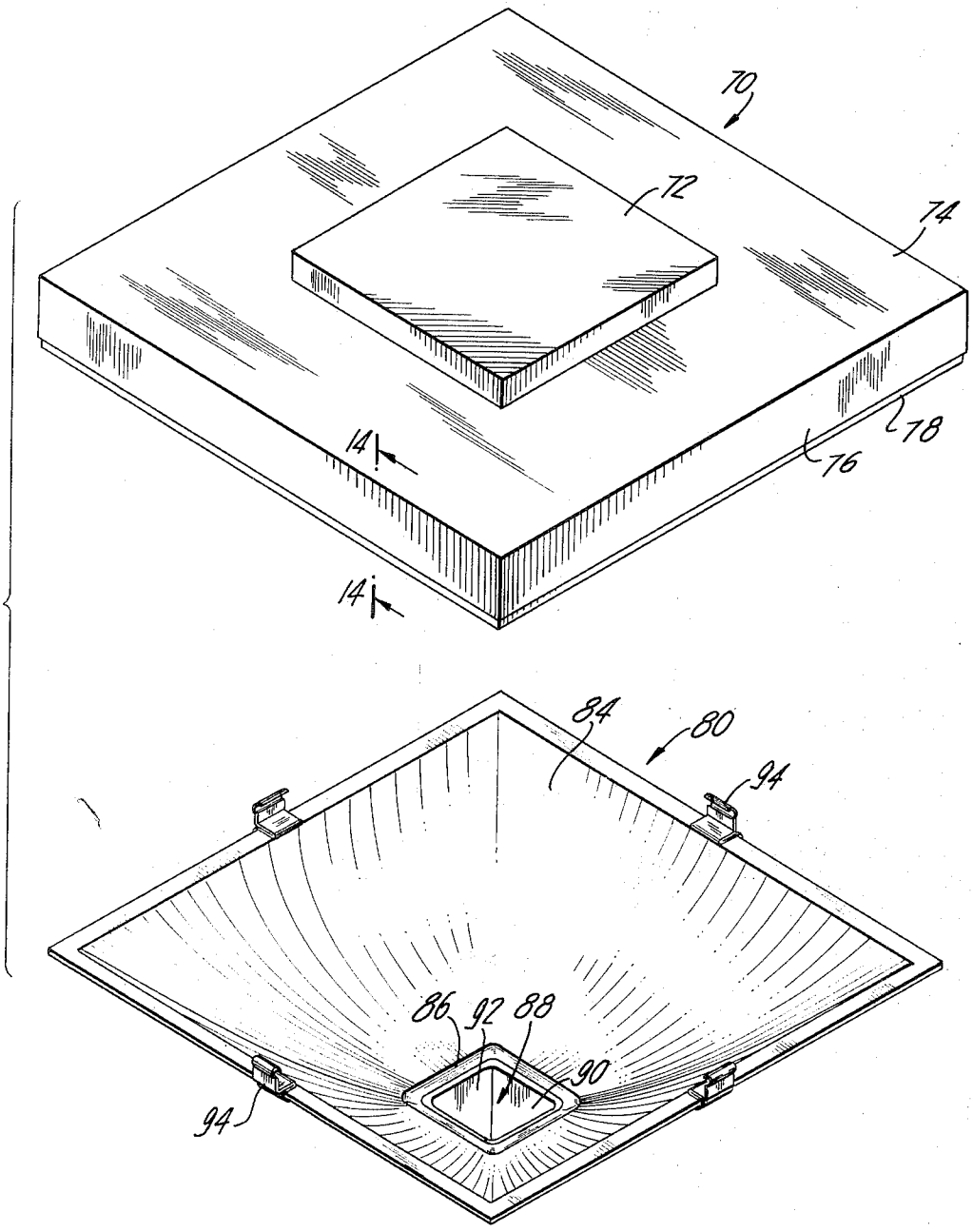

INVENTOR.
LAWRENCE A. BERNSTEIN
BY
Leigh B. Taylor
ATTORNEY

FIG. 13

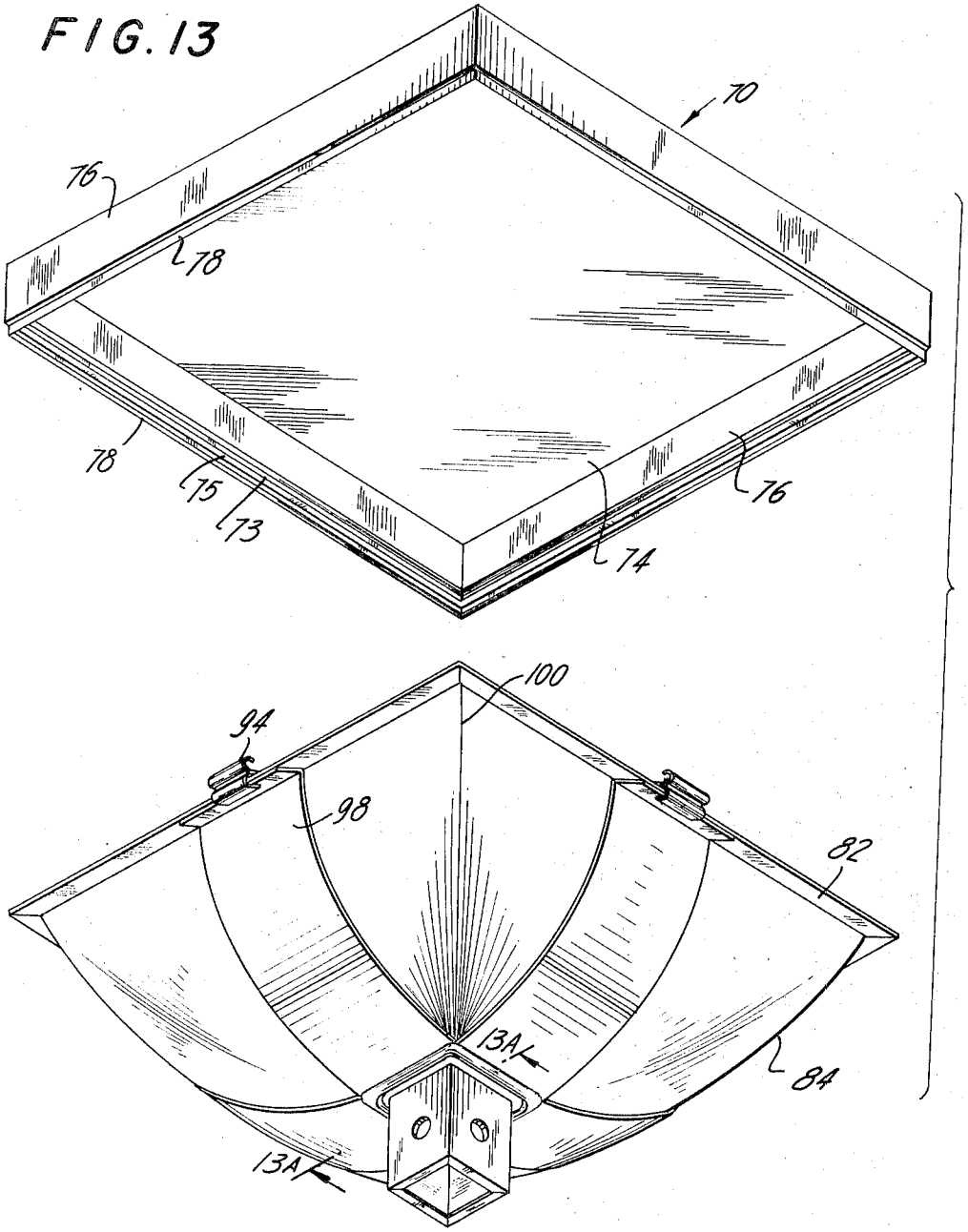

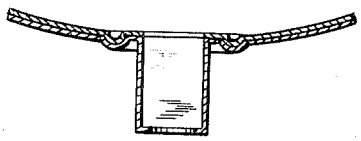

FIG. 13A

INVENTOR.
LAWRENCE A. BERNSTEIN
BY
Leigh B. Taylor
ATTORNEY

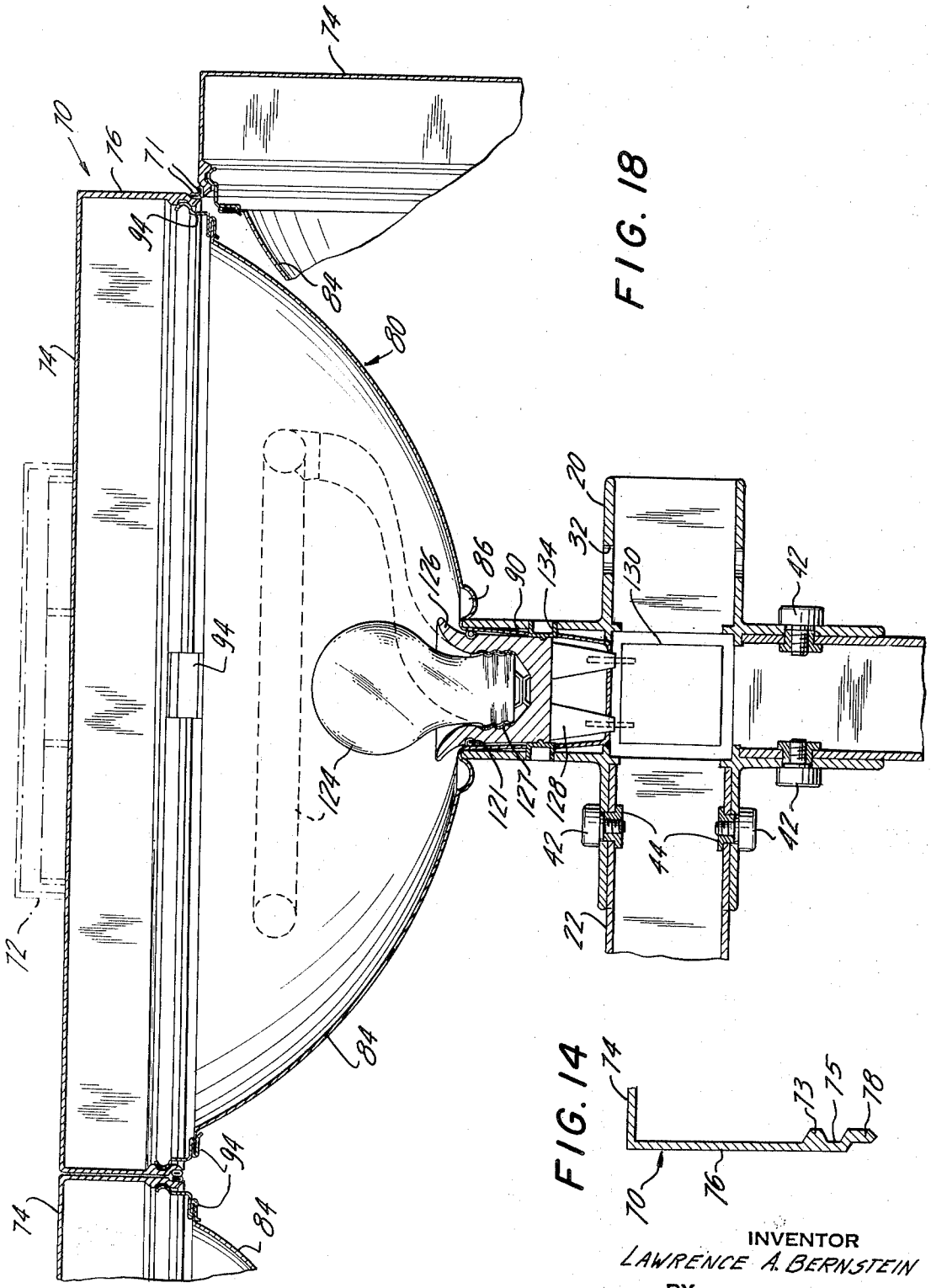

FIG. 18

FIG. 14

INVENTOR
LAWRENCE A. BERNSTEIN
BY Leigh B. Taylor
ATTORNEY

FIG. 23

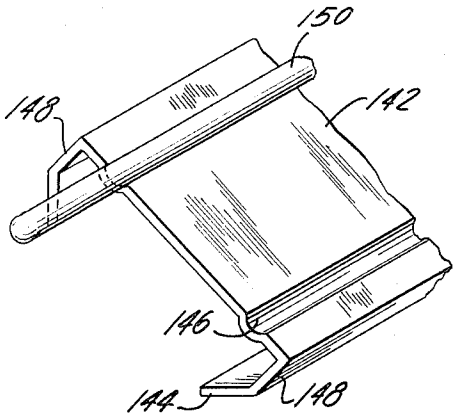

FIG. 17

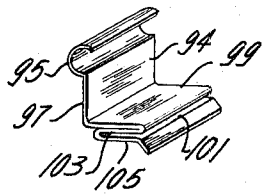

FIG. 19

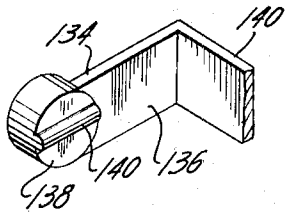

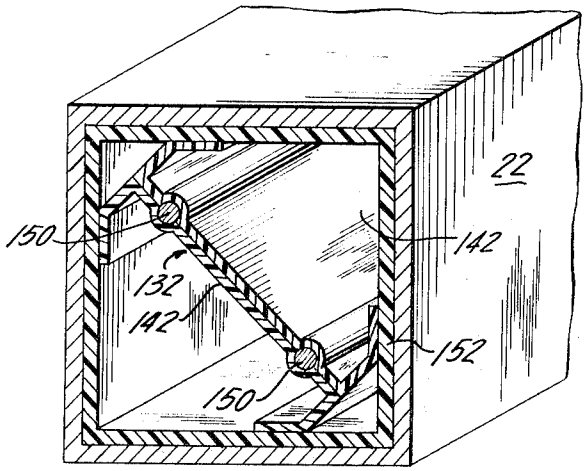

FIG. 24

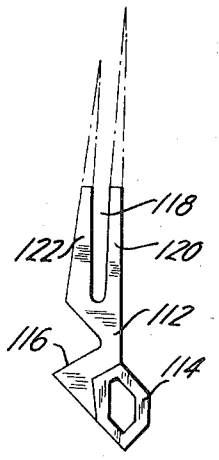

FIG. 16

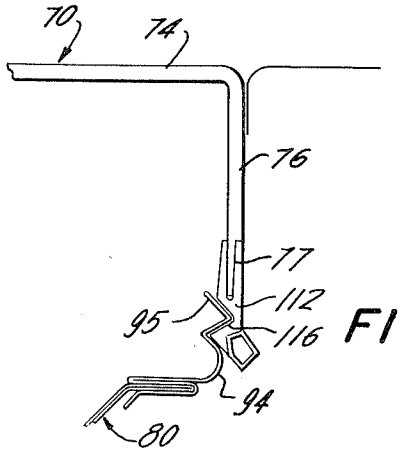

FIG. 15

INVENTOR.
LAWRENCE A. BERNSTEIN
BY
Leigh B. Taylor
ATTORNEY

FIG. 20

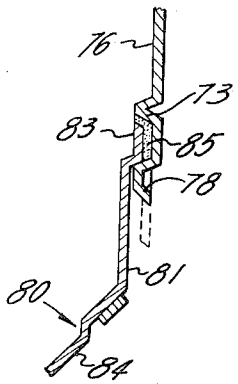

FIG. 21

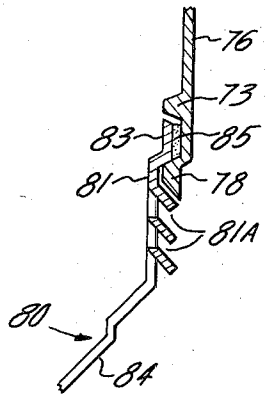

FIG. 22

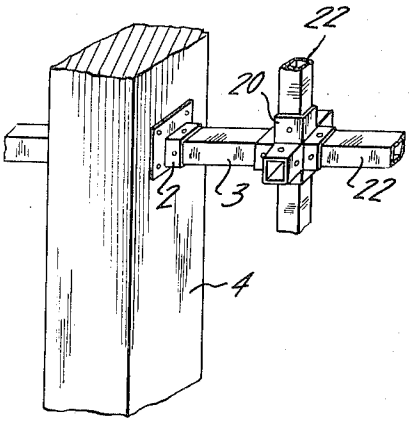

FIG. 25

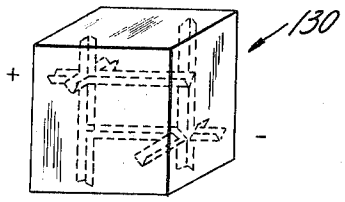

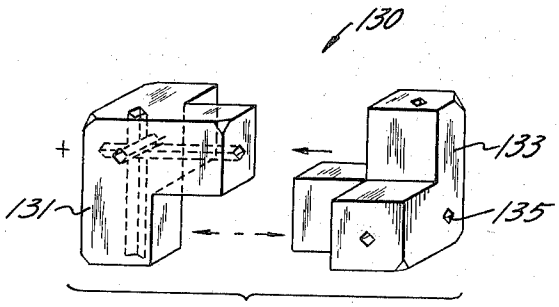

FIG. 26

FIG. 27

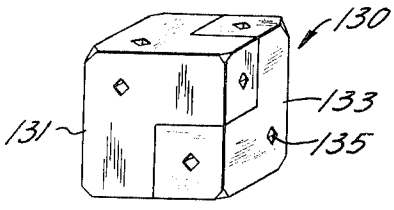

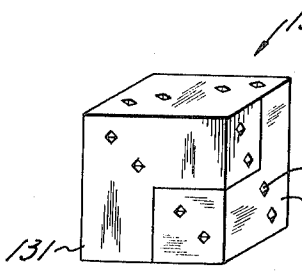

FIG. 28

INVENTOR.
LAWRENCE A. BERNSTEIN
BY
Leigh B. Taylor
ATTORNEY

FIG. 29

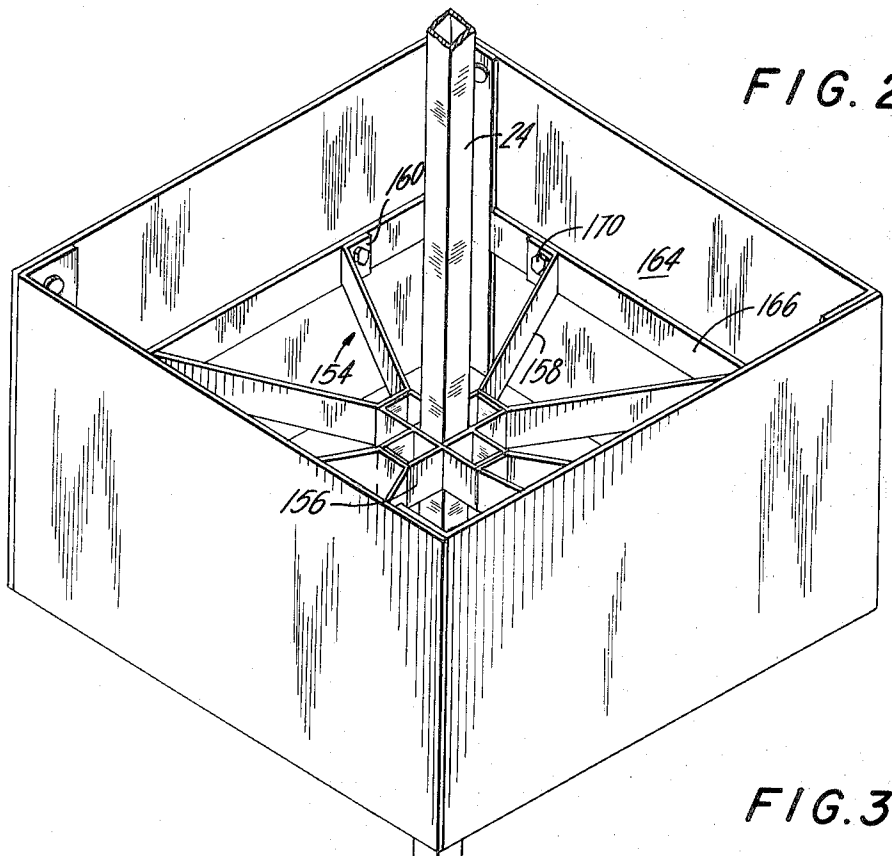

FIG. 30

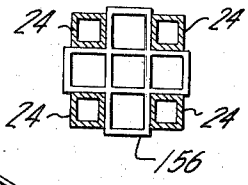

INVENTOR.
LAWRENCE A. BERNSTEIN

BY

Leigh B. Taylor

ATTORNEY

ILLUMINATED MODULAR TYPE SIGN

This invention relates to an outdoor illuminable assembly and, more particularly, to a luminescent sign or display that is constructed using a plurality of relatively small, modular display units. Likewise, the supporting structural framework of the assembly employs the module concept, thus necessitating use of a minimum of differing parts for even the largest sign or display.

The sign industry, and particularly the outdoor sign manufacturers, over the years have expended increasing energies to apply the various technological advances to their products. Because of this, we have seen the progressively changing characterization of outdoor signs which has phased through the era of the neon sign and to the now popular back-lighted molded plastic panel signs. The backlighted sign was, and still today is, considered to have been a revolutionary advance in the art of advertising. Its molded panel construction enables one to vividly characterize the advertising copy spatially as well as with color and lighting.

As can readily be appreciated, however, outdoor signs and displays in whatever form have presented the manufacturer with certain burdensome problems. First, among these has been the "custom" feature of the business. Each customer usually requests or is offered a distinctively and differently shaped unit. This, of course, means that each order, whether for one or 100 units, has required special molds, individual tooling, set ups, etc. This obviously increases costs and therefore one objective of this invention has been to substantially reduce the cost of manufacturing, shipping and erection.

A second troublesome problem shared by the industry is the handling and storage of the completed outdoor sign or display. If an order is for a substantial number of units, it is not unusual for the purchaser to request delivery of various numbers of units over a period of months. Since it will normally be most economical for the manufacturer to make the parts for such an order during a single set up and production run, it then becomes necessary for him to store the completed units that are not to be delivered immediately. Considering that the typical sign may be more than 6 feet square and a foot thick, one can easily appreciate the vast amounts of floor space that are consumed in storing even a small number of such units. The same considerations (i.e., size and weight) are also paramount in shipping of these signs to their ultimate destination as well as in their erection after arrival. Alleviation of these last stated problems then becomes a second principle objective of this invention.

In brief, this invention is, among other things, directed to a modular concept for outdoor displays or signs. This concept is extendable throughout such units and may be employed in the electrical circuitry, structural framework, reflectors, display panels and even the displayed "copy" material. It may even be said that each display panel or face, reflector, bulb and socket form a modular compartment or cell (i.e., a display assembly) that, in cooperation with other cells, will make up a sign or display assembly of any desired size.

The module sizes are relatively small and each is a substantial duplicate of the other. It should also be noted at this point that the discussion herein will primarily be devoted to display unit and assembly constructions that retain the back lighting feature, however, it should be understood that back lighting is not essential to the invention in all of its forms and embodiments.

The modular concept, among others, specifically directs itself to the problems outlined above, yet retains some of the "customization" qualities for the advertisor. Further, the invention now enables the manufacturer to make, handle and store similar mass producible elements that may thereafter be assembled into the various final formed assemblies. This may substantially reduce production costs and the handling problem is virtually erased. Components now may only need to be warehoused and, in fact, may be shipped to destination for assembly at the erection site.

In addition, the modular concept offers a multitude of further advantages. For example, since each cell is or may be individually lighted, various programmed lighting effects may be employed with this invention. Because of the small size of each display panel, wind loading on each is comparatively slight and therefore, fastening for each is considerably simplified. Maintenance, in case of damage, will necessitate replacement of individual display panels — not the entire assembly panel. There will be no long delay while a new panel is manufactured and shipped from the factory. Further, the parts are re-usable in differing assemblies so that, for a change to be effected, it is only necessary that the advertising copy by changed. And even if size and shape changes are desired, it is only necessary to extend or remove the structural framework.

These, as well as additional advantages, will become more evident upon continued reference to the ensuing description and drawings wherein:

FIG. 1 is a perspective illustration of a display assembly incorporating nine modular cells of the invention,

FIG. 2 is a similar perspective illustration of a relatively large display unit showing the relationship of the modular cells in forming dual opposed substantially planar surfaces;

FIG. 3 illustrates that the pole mounting structures used for assemblies similar to that shown in FIG. 2 may also be used for display purposes by inclusion of modular cells;

FIG. 4 is a typical wall mounted construction incorporating the modular concept;

FIGS. 5 and 6 perspectively illustrate the modular concept as it is applied to display assembly framework constructions and further illustrates one embodiment of a multi-directional structural connector;

FIG. 7 is a perspective illustration of another embodiment of the multi-directional structural connector of the invention;

FIG. 8 shows in perspective the connector of FIG. 7 used in a framework construction;

FIG. 9 is a cross-section of the connector shown in FIGS. 5 and 6 and further illustrates how bracing and/or poles may be attached to a display assembly framework;

FIG. 10 is a perspective illustration of a stirrup modification that may be employed on the framework of this invention for adaptation thereof to various shaped panels;

FIG. 11 is a cross-section along line 11—11 of the stirrup of FIG. 10 further showing a typical panel mounting construction that may be used where irregularly shaped signs are employed;

FIG. 12 is an exploded perspective view of the reflector and display panel or face portion of a modular cell or unit of the invention;

FIG. 13 is an exploded view similar to FIG. 12 showing another embodiment of the cell construction;

FIG. 13A is a partial cross-section taken along line A—A of FIG. 13;

FIG. 14 is a partial cross-section along line 14—14 of FIG. 12 showing in detail the sidewall construction of the display face;

FIG. 15 shows a modified version of the face sidewall that incorporates a separate molding;

FIG. 16 illustrates in detail the molding shown in FIG. 15;

FIG. 17 is a detailed perspective of a spring clip used to hold a display panel or face and reflector together;

FIG. 18 is a cross-section of a modular cell as it is attached to a connector of the invention;

FIG. 19 is a showing perspective showinf of a U-shaped clip employed to secure the modular cell to the framework;

FIG. 20 and 21 are cross-sectional illustrations of reflector and display face sidewall embodiments that may be used with the invention;

FIG. 22 illustrates in perspective one form of pole or wall mounting that may be used with the invention;

FIG. 23 is a partial perspective showing of the modular wiring extrusion that may be employed with a display assembly of the invention;

FIG. 24 perspectively illustrates the positioning of the modular wiring extrusion within the framework of the invention;

FIG. 25, 26, 27 and 28 variously depict the electrical wiring adapters that are positioned within each connector when a display assembly of the invention is to be illuminated; and,

FIG. 29 perspectively illustrates an underground mounting arrangement that may be used to support display assemblies as are illustrated in FIGS. 1–4.

FIG. 30 is a cross-sectional view of another embodiment of the underground mounting arrangement shown in FIG. 29 and in which a plurality of pole mounts are employed.

GENERAL

Referring now in particular to FIG. 1–4, it can be seen that reference numerals 12, 14, 16 and 18 all designate various sign or display assemblies incorporating the modular concept of this invention. Display assembly 12 depicts the invention in one of its simplest forms in that only two multi-directional connectors, more fully described hereinafter, are employed atop a single pole mount. Sign 4 in FIG. 2 expands upon the basic assembly of FIG. 1 and as shown has a dual pole mounting. Of course, the pole mounting arrangement for such display assemblies will vary according to the size and imposed loads on the particular assembly.

FIG. 3 is essentially the same assembly that is depicted in FIG. 2, however, this sign 6 illustrates a pole mounting that is modified to accommodate the basic display units forming the primary sign assembly display area. This may be used to enhance the esthetic appearance of the assembly, distinctively vary similar assemblies, and/or provide additional area for advertising copy. In both FIGS. 2 and 3, it is obvious that the border areas also may be used as message or "copy" bearing, or for other decorative purposes; thus adding to the distinctive characteristics of the assembly.

The assembly 8 shown in FIG. 4 typifies use of the modular cell where wall mounting may be desired.

MODULAR FRAMEWORK

Overall views of the modular framework or supporting structures may be seen upon reference to FIGS. 5 and 6. These structural frameworks have been devised to minimize the number of differing elements employed and to simplify the construction of each. Basically, each sign or display assembly will use only three components, primary of which is the multi-directional connector 20. Each connector 20 is adapted to receive one or more tubular or similar struts 22 which may be three-dimensionally interlaced to produce a structural network of the desired size and shape. This framework then may be elevated by a tubular or similar pole mounting such as is indicated by reference numeral 24. Likewise, an assembly of this type may be similarly attached to either a pole or a wall by means of brackets 2 and fillers 3 (FIG. 22).

The bolting and bracing that is or may be required in a finally assembled framework has been intentionally omitted from FIGS. 5 and 6 to avoid confusion. Discussion thereof may be found with reference to subsequent Figures. Further in conjunction with FIGS. 5 and 6, reference should be made to FIG. 9 where a cross-section of one embodiment of a multi-directional connector suitable for use with this invention is depicted. This view shows substantially the same one-piece multi-directional connector as is shown in FIGS. 5 and 6. FIG. 9 in addition, however, clearly depicts a form of bracing or pole mounting that may be used in a framework of the invention as well as one method of bolting an assembly together. The exterior quadrant 42 between the connector arms 30 are readily adapted to receive a tube or pole 40 as is shown. The tube or tubes 40 may be sucurely bolted to the various connectors to lend support to the overall assembly. The enlarged opening 41 in such tubes enables easy access to this bolting. The bolding in this instance includes a recessed nut 44 that is adapted to slip through the opening 32 and strut 22 and into brace 40. This in itself tends to position the strut and connector with respect to one another; however, the further abutment of the strut end walls against the stops 36 located on the interior walls of the connector assures the proper positioning of these parts.

FIG. 7 illustrates a preferred embodiment of the multi-directional connector 20. This particular connector is of a two-piece construction which, when arranged as is shown, provides six independent means of attachment for either tubular struts 22 or display units (FIGS. 12 and 18). Each such connector element has four arms 30 extending at approximately 90° from and at approximately 90° intervals around a chimney member 28. Each arm, as well as the four walls of the chimney member, are smoothly connected by fillet areas 38 and are provided with openings 32 which accommodate either bolting for an inserted strut 22 or U-shaped or similar spring clips that are employed to secure display units to the connectors. In addition, the arms 30 are provided with retaining walls 34 and stop members 36 which act to accurately position the struts or display units and rigidify the finally completed assembly.

FIGS. 8 and 10 depict the use of two-piece connectors in a structural framework including the tubular struts 22. The bolting and openings 32 have been omitted in FIG. 8 in the interest of clarity. In FIG. 10, however, bolts 42 are shown as they may be used to secure the tubular struts 22 to connectors 20. FIG. 10 further illustrates the use of adapters to stirrups 46 which are employed when irregular display assembly outlines are desired. These stirrups are slotted as at 48 to enable the user to both longitudinally and rotationally adjust them as is necessary. Further, in conjunction with FIG. 10 and upon additional reference to FIG. 11, it will become more apparent how the stirrups may be employed to accommodate such irregular display panel designs. As can be readily seen, there the stirrups 46 are attached to either the connectors 20 or struts 22 by through bolts 50 and washers 52, the first of which extends through slots 48 and openings 32 or the like.

A molding 54 which extends around the entire periphery of the display assembly to form the desired overall shape is attached to the stirrups by suitable bolts 66. This molding 54 incorporates two U-shaped grooves 53 that are spaced so as to be adjacent each stirrup and further includes depending flanges or flange areas 55 that form the terminal edges thereof. These flanges 55 provide a support and clamping area against which the suitably shaped display panel or sign face 62 may be rigidly held. The clamping action is obtained with clamps 58 which have tabs 57 that cooperate with U-grooves 53 and shield 56 that is affixed to the molding 54 by metal screws or the like 64. The clamps 58 further include flanges 68 which, together with gasket 60 and molding flange 55, rigidly engage the display panel 62. Note that the shield 56 is shaped in such manner to ride over bolts 66 and fit into U-grooves 56 where it is engaged by the clamps 58.

The construction just described makes the overall assembly concept even more desirable in that more versatility of design characteristics may be optionally included as desired. This, of course, means that an advertiser may vary from the basic rectangular shape, should he so choose while retaining a significant part of the modular construction and concept.

Referring again to FIG. 10, note that another form of bracing 43 may equally well be adapted for use in this invention. Further with respect to the pole mountings for these frameworks, it should be apparent that various rotational devices may be employed if desired, simply by modifying the poles and structure for receipt thereof. Such rotational devices are commercially available and therefore are not further dealt with here.

MODULAR CELL OR COMPARTMENT

FIGS. 12 and 13 illustrate two embodiments of single display unit constructions that, when mounted on a structural framework as is typified in FIGS. 5 and 6 in conjunction with other similar units, will form a display assembly as was earlier described. These exploded perspective views show the display panel or face 70 removed from its companion pan or reflector 80. The face 70 is a box-like structure including a message display surface 74 from which sidewalls 76 extend in an approximate vertical orientation. A raised message unit, copy or credit 72 is shown as being attached to the display surface 74.

Detailed illustrations of several sidewall constructions may be more clearly seen in cross-section in FIGS. 14, 20 and 21 as well as in FIGS. 15 and 16 that are subsequently discussed. In FIG. 14 it can be seen that the extremity of sidewalls 76 terminate as an undercut or gasket ledge 78. Immediately adjacent thereto on the interior of the sidewall is a ridge portion 73 which, because of its relationship to ledge 78, forms a clip groove 75. This later mentioned groove accommodates the spring clips or holding elements 94 which releasably lock together the reflector 80 and face 70 to form the display unit. Each of the sidewall constructions of FIG. 20 and 21 are similar, however, in these embodiments the reflector or pan is so constructed to avoid the use of spring clips 94.

Again referring to FIG. 12, the pan or reflector 80 is shown to include a contoured reflector wall 84, the uppermost edge being outwardly directed in the form of a lip 82 over which the clips 94 fit. Centrally of and at the pan bottom, there is an extended integral tubular passageway 88 surrounded by a condensate recess 86 and formed by passageway walls 90, 92. This tubular passageway is so constructed that it will mate with the multi-directional connector 20 (FIG. 18). This reflector 80 therefore forms an intermediate supporting means between the framework and face 70.

The two embodiments of FIGS. 21 and 22 modify the lip portion 82 of FIG. 12 so that it, instead of flaring outwardly, is turned upwardly to form vertical pan walls 81. These walls are suitably provided with offset tabs 83 which are adapted to mate in the clip grooves 75 of pan 70 and may if desired retain a gasket 85 therebetween. Further, it is is deemed advisable, the pan wall 81 may be vented by the provision of openings 81A.

A further embodiment of the reflector 80 is shown in FIG. 13. In this particular instance, the reflector wall 84 is supported by a separate strap structure that includes the extended tubular passageway 88. The spring clips 94 may be used to hold the strap structure and wall together and/or additional metal screws, adhesives, etc. may be used for this purpose. Otherwise, the construction is similar to that illustrated in FIG. 12. Note that the supporting straps 98 may be of a minimum width and that the reflector may include relatively sharp corner creases 100. It may be added that these creases have not been found to be detrimental to the reflective qualities of the pan.

Upon reference to FIG. 17, one may better visualize the spring clip 94 which is preferred as a holding device between the reflector and face. This clip by the folded nature of strips 99, 103, and 105 forms a space 101 that is attachable to the lip 82 of pan 80. Further, there is an approximately 90° wall extension 97 of strip 99 and atop that extension is detent 95, which detent engages the clip groove 75 on face 70. This engagement is maintained because of the inherent spring action thereof and thus retains the various parts in a rigid yet easily releasable relationship.

A further modified pan to face connection is also shown in FIGS. 15 and 16. In FIG. 15, for instance, the face sidewall 76 is undercut as at 77 in a manner to receive a molding 112. A similar spring clip 94 is adapted to engage a recess 116 in the molding rather than a groove in the face sidewall. The undercut 77 rides into a slot 118 formed by the legs 120, 122 of the molding. As is most clearly shown in FIG. 16, the molding fur-

ther includes an integral gasket **114** that, due to its mating relationships with similar gaskets on other adjacent faces, will seal the assembly interior from water, dust or the like. Similar gasketing may be seen in FIG. **18**; however, in the embodiment there shown, the gaskets **71** are separate from the faces **70** and are retained in the ledges **78** previously described.

Upon continued reference to FIG. **18**, it will become more apparent how the passageway walls **90, 92** of tubular passageway **88** (as shown in FIG. **12**) engage the arms or chimney member of connectors **20**. Additionally, it there becomes apparent how the electrical components of the system are employed. Note in particular that the tubular passageway walls **90, 92** extend inwardly of the connector **20** until the bottom of the walls abut stops **36**. At this point, a U-shaped clip **134** (FIG. **19**) may be inserted down the passageway **88** until it snaps into and through aligned openings in the passageway walls and connector. This then will accurately position and firmly retain the display unit on the connector and framework.

The U-shaped clip includes three spring walls **136** and **140** with plugs **138** being attached to the ends of walls **136**. These plugs as discussed slip into the passageway and connector openings to secure the elements together. A locking element **140** on the plug interior will be discussed below.

MODULAR ELECTRICAL SYSTEM

It is anticipated that in conjunction with the various modular elements discussed above, it may also be desirable to include a modular electrical system. Although such a system is not necessary to a functional illuminated sign or display unit, it most certainly may be employed such that full advantage can be taken of the overall concept. In such a system, a principle element is the electrical socket **126** which is adapted to fit into the passageway **88** and be removably retained there by the locking elements **140** on U-shaped clips **134**. Such a socket also incorporates a gasket **121** adjacent its uppermost end as well as electrically conductive threads **127** and prongs **128** which will transmit the necessary electrical energy to bulb or lamp **124**.

Centrally located in the connector **20**, one can find a six-way electrical connector or adapter **130**. This adapter will direct current to all arms and chimneys of the connector so that the electrical system may be continued in any desired direction. FIGS. **25, 26, 27** and **28** more fully illustrate the adapter FIG. **28** is simply a four-wire version of those shown in the other Figures. Such adapters may be made in two pieces (FIG. **26**), one half **133** being the negative wire side and the other **131** being positive. Each side of the adapter will have exposed female receptacles **135** into which prongs **128** or the like are adapted to be inserted.

The system inside of the assembly framework may be completed by the use of a wiring module **132** (FIGS. **23** and **24**) that is made up of two wiring extrusions **142**. Each extrusion includes connecting legs **148** and integral feet **144** that are oriented such that the feet will engage adjacent interior walls of a strut **22**. On the central wall of the extrusion, two or more conductor recesses **146** are positioned for receipt of conductors **150**. The wiring module is completed by placing and fastening two extrusions together as is shown in FIG. **24** and thereafter slipping same into the struts **22** until the prongs on conductors **150** (not shown) satisfactorily mate with the adapter female receptacles **135**. Of course, the wiring module length will be determined by the framework strut and connector sizes which may be varied as desired.

Also shown in FIG. **24** is a tubular insulator **152** that may be used at the option of the designer.

UNDERGROUND SUPPORT

FIG. **29** illustrates the underground support that forms a part of this invention. As is readily apparent, the pole mount **24** for a display assembly such as is depicted in FIGS. **1–4** extends some distance or depth into the earth, which depth is largely determined by the overall size of the assembly.

It is anticipated that the typical large concrete bases that are normally poured for such signs may, by utilizing this portion of the invention, be substantially reduced or eliminated. To accomplish this and yet retain a firmly embedded underground pole mounting arrangement, two sets of four box plates or pad-like elements **164** are bolted together along their overlapping wall connections **168**. The first box so formed may be lowered into a suitably prepared excavation, after which the pole mount is centrally positioned therein. A spacer **156** is attached at the appropriate height along the pole **24** and the feet **160** of braces or girders **154** are attached by bolts **170** to the reinforced areas **166** on plates **164**. As can be seen, the braces also include legs **158** and pads **162**, the latter of which freely abut spacer **156** after the pole **24** has placed in the approximate center of the excavation.

After the appropriate attachments are made, back filling of the excavation may be begun. However, prior to completely filling the excavation, a second similarly constructed box is placed therein in a position proximate to but a suitable distance below ground level. This then produces a maximum of plate surface areas acting in all directions to maintain the assembly in an upright position regardless of the loading applied thereto. Further, it should be noted that because of the free and floating pin type connection between spacers **156** and pads **162**, no moment condition is created that would tend to create unevenly distributed pressures against the soil.

The spacers **156** may also be employed above ground as pole separation braces for multiple pole mounting systems. For such uses, however, the spacers are securely attached to the poles **24** as by the use of through bolts or the like.

MATERIALS OF CONSTRUCTION

Although in most instances, the materials of construction that may be used in a display assembly or sign of this invention are optional and left to the choice of the manufacturer, certain preferred materials appear most desirable. For example, the structural framework (i.e., connectors, struts, braces and poles) may be of aluminum or steel. The bolting may also be of aluminum, steel or a variety of alloy steels. The selection of materials for use underground will very much depend on soil conditions that may affect corrosion but certain alloy steels, cathodically protected steels or aluminum would appear to be the most appropriate choices.

The display panels may be made from a variety of materials, including high impact polystyrene or acrylics, such as polymethly methacrylate or polyethylene or polypropylene. Gasketing and moldings may be of elas-

tomers, neoprene or expanded polyvinyl chloride materials. Likewise, electrical components may be manufactured from a variety of extrudable and moldable plastics.

The reflectors are most suitably made from either plastic or aluminum and in those cases where aluminum is employed, a steel strap supporting element is used in conjunction with it.

At this point, it also seems appropriate to reiterate that the advertising copy may take any of a number of forms. For example, plastic or other inserts may be placed inside of the faces to give varying effects. Raised plastic letters may be glued or otherwise attached to display surface of the face or large plastic or other overlays may be attached to the several display face surfaces. Thus, it should be obvious that an innumerable variety of "copy" combinations are possible in using the invention to the fullest.

It will be apparent from the foregoing discussions, descriptions and drawings that the invention disclosed alleviates several of the notable disadvantages presently encumbering the outdoor sign industry. Additionally, it should be clear that numerous other advantages are also forthcoming therefrom. However, even though the invention has been described in detail with particular reference to preferred embodiments thereof, it will be understood that variations and modifications can be effected within the spirit and scope of the invention as described hereinabove and as defined in the appended claims.

I claim:

1. A display assembly adapted for the presentation of a message or the like and including:

1. a plurality of contiguous box-like panels with sealing means provided therebetween, said panels having substantially planar faces and integral perpendicularly arranged sidewalls, said planar faces forming at least one exposed surface display area upon which said message or the like may be exhibited and said sidewall including means to accept releasable holding elements;
2. multi-directionally oriented interengaging means adapted to support said adjacent panels in a selectively positioned, three-dimensional array of intersecting and parallel planes so that the surface display areas of the panels so positioned are angularly displaced from one another around said interengaging means; and,
3. internal intermediate supporting means connected with said panels by the holding means and projectably extending therefrom to connections with said interengaging means, said supporting means being further characterized in that it is so shaped to form a cellular construction between said face member and said interengaging means, and internally separates each of said panels one from the other.

2. An assembly according to claim **1** wherein said panels are so arranged to provide two opposed parallel exposed surface display areas that are supported by said interengaging means.

3. A display assembly adapted for the presentation of a message or the like and including:

1. a plurality of adjacently positioned panels having substantially planar faces that comprise at least one exposed surface display area upon which said message or the like may be exhibited;
2. multi-directionally oriented interengaging means including a plurality of multi-directional connector means adapted to releasably hold said surface display area in spaced relationahip therewith, and struts engaging and linking said multi-directional connector means to form a network adapted to support said adjacent panels in a selectively positioned, three-dimensional array of intersecting and parallel planes so that the surface display areas of the panels so positioned are angularly displaced from one another around said interengaging means; and,
3. internal intermediate supporting means that projectably extend from and connect said panels to said interengaging means, said supporting means being further characterized in that it is so shaped to form a cellular construction between said face member and said interengaging means, and internally separates each of said panels one from the other.

4. An assembly according to claim **3** wherein said panels are of a box-like construction and include integral sidewalls that are substantially perpendicular to said planar faces, said sidewalls being further characterized in that a means contiguous therewith is adapted to accept releasable holding elements which connect said panel and said intermediate supporting means.

5. An assembly according to claim **4** wherein said panels forming said one exposed surface display area are contiguous one with the other and a sealing means is provided between each contiguous panel.

6. A display assembly adapted for the presentation of a message of the like which assembly is held aloft on a pole-like support that is attached to an embedded principal supporting member and including:

1. a plurality of adjacently positioned panels having substantially planar faces that comprise at least one exposed surface display area upon which said message or the like may be exhibited;
2. multi-directionally oriented interengaging means adapted to support said adjacent panels in a selectively positioned three-dimensional array of intersecting and parallel planes so that the surface display areas of the panels so positioned are angularly displaced from one another around said interengaging means;
3. internal intermediate supporting means that projectably extend from and connect said panels to said interengaging means, said supporting means being further characterized in that it is so shaped to form a cellular construction between said face member and said interengaging means, and internally separates each of said panels one from the other;
4. a plurality of pad-like elements connected but spaced from said principal supporting member and adapted to provide substantially vertically disposed underground bearing surfaces;
5. adjustably movable attachment means placed along said principal supporting member to which said pad-like elements are connected; and,
6. girder assemblies secured to the pad-like elements and in abutting relationship with said attachment means to provide a relatively rigid supporting arrangement.

7. A structural framework adapted to support a surface display area incorporating adjacently positioned

panels upon which a message or the like may be exhibited and including:

1. a plurality of multi-directional connector means adapted to releasably hold said surface display area in spaced relationship therewith and in a selectively positioned three-dimensional array of intersecting and parallel planes that are angularly displaced from one another around said connector means;
2. struts engaging and linking said multi-directional connector means to form a network so constructed that said adjacently positioned panels are contiguous; and,
3. stirrups positioned upon various of said multi-directional connector means and struts so that a multitude of surface display area shapes may be accommodated.

8. A structural framework according to claim 7 wherein bracing means are affixed to various of said struts and multi-directional connector means to additionally reinforce said framework.

9. A display unit adapted to exhibit a message or the like and including:

1. a panel member of a box-like construction comprising:
   a. a substantially planar face portion adapted to receive said message or the like;
   b. sidewall portions integral with said substantially planar face portion and including a terminal edge; and,
   c. integral means provided contiguous with said terminal edge that is adapted to accept releasable holding elements and is further adaptable to provide for sealing between adjacently positioned panel members; and,
2. a pan-shaped intermediate supporting means connected to said panel member by said holding elements;

said assembly being further characterized in that when said panel member and said pan-shaped intermediate supporting means are so connected a cellular construction is formed that is adaptable to separate adjacently positioned panels.

10. A display panel adapted to exhibit a message or the like and including a panel member of a box-like construction comprising:

1. a substantially planar face portion adapted to receive said message or the like;
2. sidewall portions integral with said substantially planar face portion and including a terminal edge; and,
3. integral means provided contiguous with said terminal edge that is adaptable to provide for sealing between adjacently positioned panel members and further adapted to accept releasable holding elements.

* * * * *