T. F. JOHNSON, Jr.

POLE GRAB FOR INSULATOR CHANGERS.

APPLICATION FILED AUG. 26, 1920.

1,432,561. Patented Oct. 17, 1922.

2 SHEETS—SHEET 1.

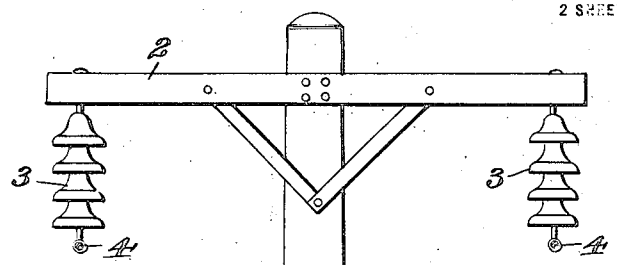

Fig. 1.

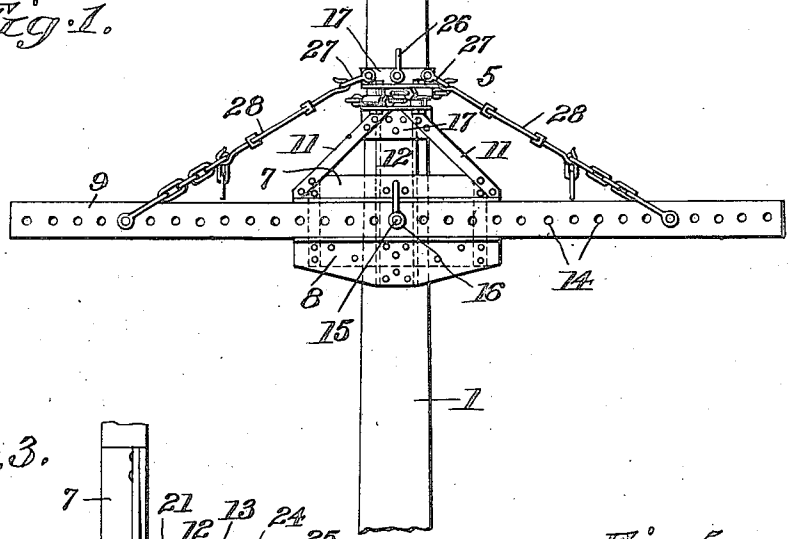

Fig. 3.

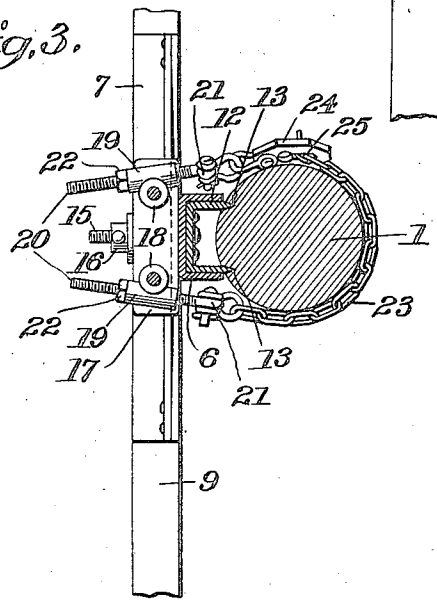

Fig. 5.

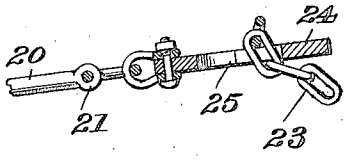

T. F. Johnson, Jr.,

INVENTOR,

WITNESSES

Howard D. Orr.

F. T. Chapman.

BY E. G. Siggers.

ATTORNEY.

T. F. JOHNSON, JR.

POLE GRAB FOR INSULATOR CHANGERS.

APPLICATION FILED AUG. 26, 1920.

1,432,561.

Patented Oct. 17, 1922.

2 SHEETS—SHEET 2.

Fig. 2.

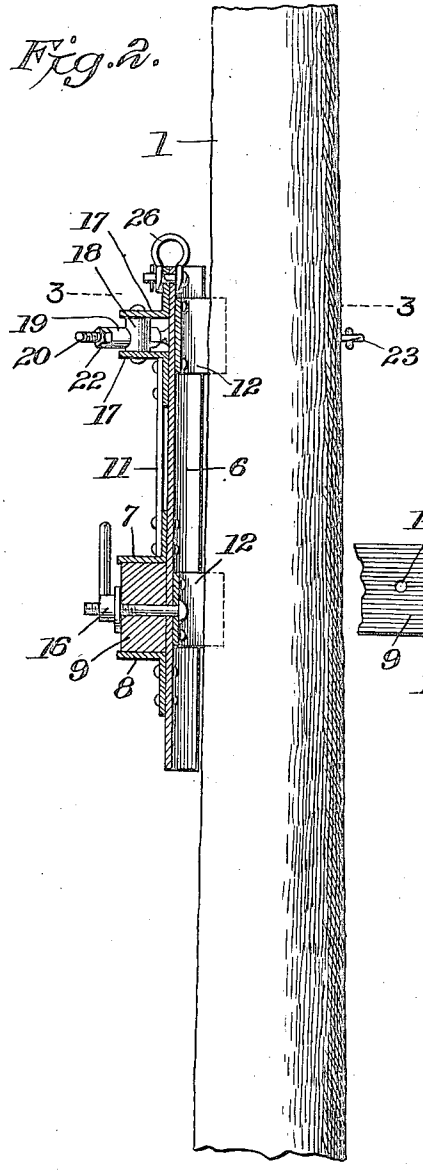

Fig. 4.

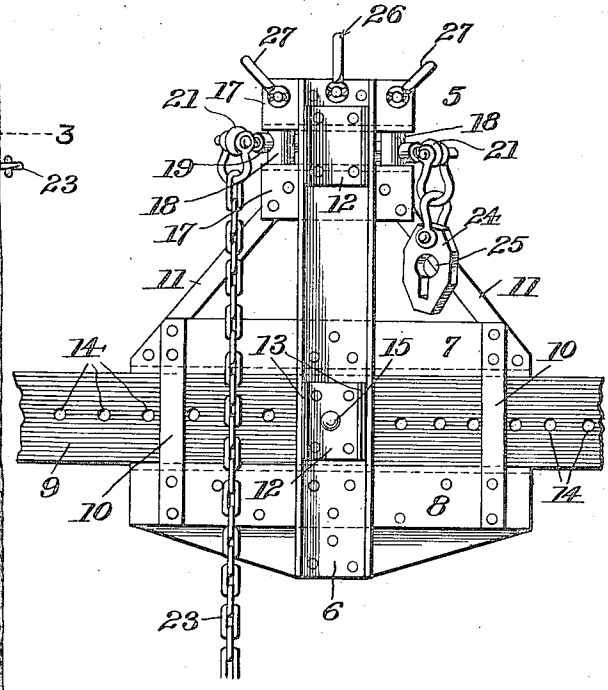

T. F. Johnson, Jr.,
INVENTOR,

WITNESSES

Howard D. Orr.

F. T. Chapman.

BY E. G. Siggers.

ATTORNEY

Patented Oct. 17, 1922.

1,432,561

UNITED STATES PATENT OFFICE.

TOMLINSON FORT JOHNSON, JR., OF ATLANTA, GEORGIA.

POLE GRAB FOR INSULATOR CHANGERS.

Original application filed May 16, 1918, Serial No. 222,948. Divided and this application filed August 26, 1920. Serial No. 406,208.

To all whom it may concern:

Be it known that I, TOMLINSON F. JOHNSON, Jr., a citizen of the United States, residing at Atlanta, in the county of Fulton and State of Georgia, have invented a new and useful Pole Grab for Insulator Changers, of which the following is a specification.

This invention has reference to pole grabs and its object is to provide a structure by means of which the insulator changer may be attached to a pole of a transmission line in such manner as to be supported by a temporary cross arm providing for various positions of use, and changes of position which may be very readily made.

This application is a division of my application Serial No. 222,948 for an insulator changer filed by me on March 16, 1918, in which the pole grab is shown and described but not claimed, since claims for the pole grab are made herein. The invention relates particularly to means readily attachable to an ordinary wooden pole such as is used in electric transmission lines, whereby to temporarily attach a cross arm thereto in such manner that an insulator changer may be made fast thereto in order to carry insulators supporting high tension conductors in out-of-the-way positions while insulators which have been found to be defective are replaced by perfect insulators. The arrangement is such that the insulators may be handled or replaced without interruption of service and without danger to the workmen.

The invention will be best understood from a consideration of the following detailed description taken in connection with the accompanying drawings forming part of this specification, with the understanding, however, that the invention is not confined to any strict conformity with the showing in the drawings, but may be changed and modified so long as such changes and modifications mark no material departure from the salient features of the invention as expressed in the appended claims.

In the drawings:

Fig. 1 is an elevation of a transmission line pole with the invention attached.

Fig. 2 is a longitudinal section of the pole grab applied to a pole.

Fig. 3 is a section on the line 3—3 of Fig. 2.

Fig. 4 is a face view of the grab as seen from the rear face thereof.

Fig. 5 is a longitudinal section of a chain lock or take up for holding the grab to the pole.

Referring to the drawings there is shown in Figs. 1 and 2 a pole 1 such as is used on certain high tension transmission lines, but which may be taken as indicative of any suitable support for such line whether of the wooden pole type or of the steel tower type.

The pole 1 is shown as provided with a cross arm 2 such as is used in connection with wooden poles but which may be taken as indicative of any type of cross arm or supporting member for insulators 3 indicated as of the suspension type, although not necessarily confined to such particular type of insulator. In Fig. 1 the insulators, which, in high tension lines, each comprises two or more units in series, support a line wire 4, the number of units in each string depending upon the voltage on the transmission line.

In the case of a wooden or other similar pole there is provided a grab 5, shown separately in Fig. 4, and applied to the pole 1 in Figs. 1, 2 and 3.

The grab comprises a channel bar 6 extended lengthwise of the pole when applied thereto, and fast to the channel bar are cross bars 7 and 8 spaced apart lengthwise of the channel bar sufficiently to receive a cross arm 9 between them. The cross bars 7 and 8 are metal angle bars with outstanding webs facing each other to embrace the top and bottom faces of the cross arm 9. The cross bars 7 and 8 are connected at their ends by strips 10 and the top cross bar 7 is further connected to the channel bar 6, which projects considerably above it, by stays 11, so that the body of the grab is in the form of a frame formed largely of structural steel. The mouth of the channel 6 is open toward the pole 1 and fast in the channel near opposite ends thereof are U-shaped anchor pieces 12 projecting beyond the mouth of the channel and there having sharpened edges 13 designed to bite into the pole 1, if the latter be of wood, or to otherwise engage the pole so as to avoid slipping or other movement thereon if the pole be of some such material as concrete. Of course

the anchor members 12 may be otherwise formed so long as they perform the functions of anchor members.

The cross arm 9, because of its use, may be termed a temporary cross arm and is provided with a longitudinal series of holes or passages 14 to be traversed by bolts serving a purpose to be described. The grab has the cross bars 7 and 8 elongated on opposite sides of the channel bar 6 and a single bolt 15 extending through the cross bar 6 and through the cross arm 9 serves to hold the cross arm firmly to the grab by the use of a single handle nut 16, this greatly simplifying the manipulation of the cross arm. Under some circumstances more than one bolt 15 may be employed.

At what constitutes the upper end of the grab in use are other cross bars 17 spaced apart one above the other and made fast, by riveting or otherwise, to the channel bar 6. The cross bars 17 are of angle metal and carry swivels 18 between them, each swivel being pivotally mounted between the cross bars and is provided with a sleeve portion 19 at an angle to the main part of the swivel. Each sleeve 19 is traversed by a screw rod 20 terminating at one end in an eye 21 and also carrying a lock nut 22 whereby the screw rod is securely lodged in the sleeve 19.

One rod 20, there being two such rods at opposite ends of the cross bars 17, carries a chain 23 of sufficient length to embrace, in greater part, the pole 1. The other screw rod 20 has flexibly connected to it a plate 24 provided with a key hole slot 25 shaped to receive the chain 23 and lock a link thereof in the narrow end of the key hole slot, whereby the plate 24 serves as a chain lock holding the chain about the pole. The chain may be tightened by means of the nuts 22. At the upper end of the pole grab there are swivel links or clevises 26 and 27, the clevis 26 providing means whereby lifting tackle, not shown, may be attached to the grab to elevate it to the desired height while the links or clevises 27 serve for the attachment of adjustable braces 28 extending to the cross arm 9 near the outer ends thereof to aid in supporting the cross arm.

The perforations 14 in the cross arm 9 permit the attachment of a manipulating pole for carrying the line wires into positions needed for the proper changing of insulators and for other purposes. Such pole does not form a part of the present invention and hence is neither shown nor described herein but is shown and described in the application of which the present application is a division.

The pole grab may be engaged by suitable tackle and then loosened from the pole so that the grab may be elevated or lowered as occasion may require, after which the pole grab is again made fast to the pole in the new position. The cross arm 9 is readily adjusted lengthwise in the pole grab so that it may project as far as desired to either side of the pole, the holes 14 and the adjustable braces 28 facilitating such manipulation.

What is claimed is:

1. The combination with a cross arm and pole, of a pole grab comprising a structure having means for sustaining the pole grab, and means for securing the grab to the pole, comprising a pair of pivoted sleeves, a rod passed through each sleeve, means for adjustably connecting the rods to the sleeves for tightening a chain, a chain flexibly connected to one of the rods, and a chain lock flexibly connected to the other rod and detachably engaging with the chain.

2. The combination with a cross arm and pole, of a pole grab comprising a structure having means for sustaining the pole grab, and means for securing the grab to the pole, comprising a pair of pivoted screw-threaded sleeves, a screw rod passed through each sleeve, a nut on each screw rod, a chain flexibly connected to one of the screw rods, and a chain lock flexibly connected to the other screw rod and detachably engaging with the chain.

3. In an insulator changer for high tension charged transmission lines, the combination with a cross arm and pole, of a pole grab comprising a frame with means thereon to bite into the pole, a support on the frame for the cross arm, and holding means comprising a chain and chain lock, a pair of adjusting screws, one carrying the chain and the other the chain lock to detachably engage the chain, and swivel connections on the pole grab for the adjusting screws, whereby the chain may be made to encircle the pole and cause the biting means to sink into the pole for holding the grab against displacement on said pole.

4. The combination with a cross arm and pole, of a pole grab comprising a frame having means for sustaining the cross arm, and means for securing the grab to the pole comprising a pair of screw-threaded sleeves pivoted to the frame, a pair of screw-threaded rods engaging the sleeves, a nut for the outer end of each rod, and a chain connected at its ends to the inner ends of said rods.

5. In an insulator changer for high tension charged transmission lines, the combination with a cross arm and pole, of a pole grab comprising a frame with means thereon for biting into the pole, a support on the frame for the cross arm, and holding means provided at the top of the frame above the said support comprising a chain and chain lock, adjusting screws on the chain and chain lock, and swivel connections on the pole grab for the adjusting screws, whereby

the chain may be made to encircle the pole and cause the biting means to sink into the pole for holding the grab against displacement on said pole, said pole grab being provided with a pair of adjustable brace means, each fast at one end to the top of the frame and arranged to be secured at the lower end to the cross arm carried by the pole grab.

6. The combination with a cross arm and pole, of a pole grab comprising a channel bar, cross bars fastened thereto and spaced apart to receive the cross arm between them, U-shaped anchor pieces fastened to the channel bar and provided with biting edges, and a chain adapted to encircle the pole and having means for adjustably connecting the chain to the grab.

7. The combination with a cross arm and pole, of a pole grab comprising a vertically disposed channel bar, cross angle bars fastened thereto and spaced apart vertically along the channel bar to receive the cross arm between them, means for securing the cross arm in place, means provided on the grab for fastening it to the pole, and adjustable brace connections between the cross arm and the top of the vertically disposed bar.

8. The combination with a cross arm and pole, of a pole grab having means for sustaining the cross arm on the grab and means for securing the grab to the pole, each of said means being independent of the other, the first named means permitting the lateral adjustment of the cross arm with respect to the pole without affecting the means for securing the grab to the pole, and the last named means providing adjustment of the whole structure along the pole.

9. The combination with a cross arm and pole, of a pole grab comprising a vertically disposed channel bar, transverse angle bars fastened thereto and spaced apart to receive the cross arm between them, and strips connecting the transverse bars and spanning the cross arm.

10. The combination with a cross arm and pole, of a pole grab comprising a vertically disposed channel bar, transverse angle bars fastened thereto and spaced apart to receive the cross arm between them, said cross arm having perforations, a bolt engaged with said channel bar and passed through one of the perforations of the cross arm for securing said cross arm in place, and strips connecting the transverse bars and spanning the cross arm.

11. The combination with a cross arm and pole, of a pole grab comprising a vertically disposed channel bar, transverse angle bars fastened thereto and spaced apart to receive the cross arm between them, strips connecting the transverse bars and spanning the cross arm, cross bars fastened to the channel bar at the top, and brace chains at each side connected at one end to the top cross bars and at the bottom to the cross arm.

12. The combination with a cross arm and pole, of a pole grab comprising a vertically disposed channel bar, transverse angle bars fastened thereto and spaced apart to receive the cross arm between them, means for securing the cross arm in place, another pair of transverse spaced angle bars fastened to the channel bar at the top, and a pole fastening means secured to the last mentioned angle bar.

13. The combination with a cross arm and pole, of a pole grab comprising a vertically disposed channel bar, transverse angle bars fastened thereto and spaced apart to receive the cross arm between them, means for securing the cross arm in place, a U-shaped anchor piece secured to and mounted in the channel bar at the top and having sharpened edges to engage the pole, and a chain encircling the pole where the anchor piece engages, and having means for adjustably connecting the chain to the grab.

14. The combination with a cross arm and pole, of a pole grab comprising a vertically disposed channel bar, transverse angle bars fastened thereto and spaced apart to receive the cross arm between them, means for securing the cross arm in place, U-shaped anchor pieces secured to the channel bar at spaced points and having sharpened edges to engage the pole, and a chain encircling the pole and having means for adjustably connecting the chain to the grab.

15. The combination with a cross arm and pole, of a pole grab comprising a vertically disposed bar, means thereon for sustaining and adjusting the cross arm on the grab, and means at a different point on said bar for holding the grab to the pole, said means being wholly independent of each other and permitting the lateral adjustment of the cross arm on the bar without affecting the security of the means for holding the grab to the pole.

16. The combination with a cross arm and pole, of a pole grab comprising a vertically disposed channel bar, transverse angle bars fastened thereto and spaced apart to receive the cross arm between them, means for securing the cross arm to the channel bar, other angle bars fastened to the channel bar at the top, pole fastening means secured to the last mentioned angle bars, means located at spaced points on the channel bar for biting into the pole, and adjustable brace connections between the top of the channel bar and the cross arm.

In testimony that I claim the foregoing as my own, I have hereto affixed my signature.

TOMLINSON F. JOHNSON, JR.