June 21, 1938. A. T. ROCHTE 2,121,669

PEENING TOOL

Filed April 6, 1937

Fig. 1.

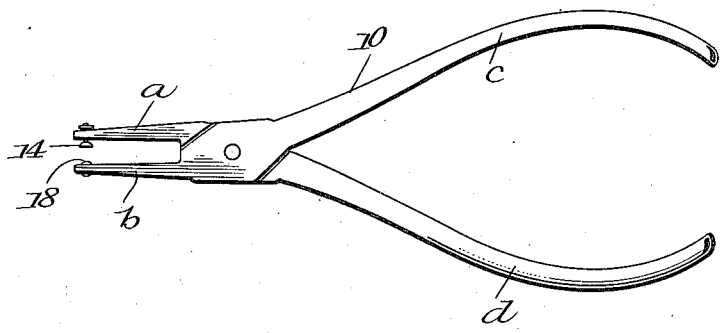

Fig. 2.

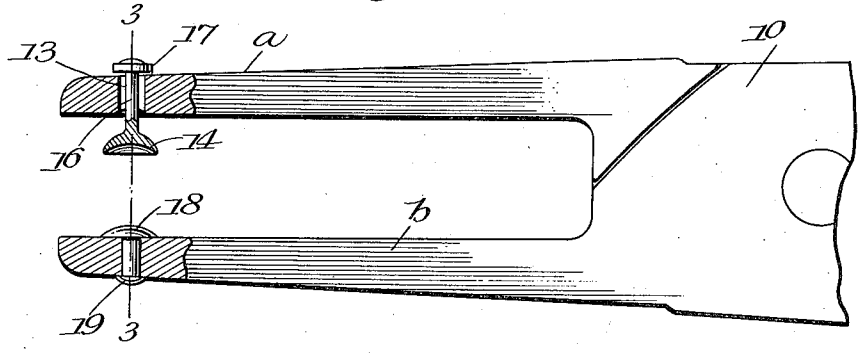

Fig. 3.

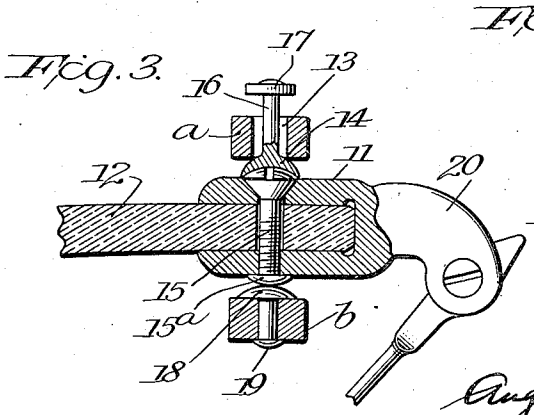

Fig. 4.

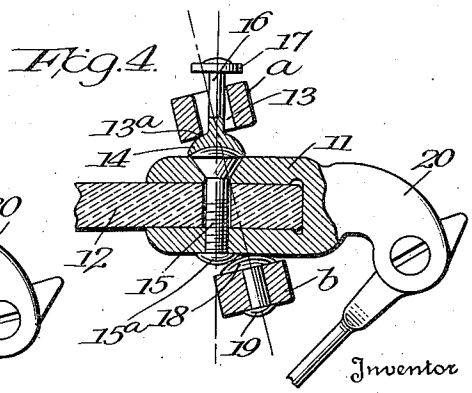

Inventor

Augustine T. Rochte

By Edward F. Watkins

Attorney

Patented June 21, 1938 2,121,669

UNITED STATES PATENT OFFICE

2,121,669

PEENING TOOL

Augustine T. Rochte, Tiffin, Ohio

Application April 6, 1937, Serial No. 135,319

6 Claims. (Cl. 81—3.6)

The present invention is a tool, and relates particularly to a tool used by optometrists or jewelers in connection with the assembly of eyeglasses, and like uses.

The lens of rimless eyeglasses are usually attached to the nose or bridge mountings or to ear pieces thereof by means of a bifurcated lug or lens strap and a screw threaded thru said lug or strap and thru the lens, whereby parts are held together. These screws frequently become loose and fall out, due to constant handling of the eyeglasses or to vibration, thus permitting the lens to fall out of position or the loss of parts of the mounting.

It is the object of the present invention to provide a tool for peening-over or riveting the end of the screw to prevent it from becoming loose and falling out.

Another object of the invention is the provision of a tool of the above stated character which is extremely simple in construction, easy to manipulate and which will accomplish the desired object without injury to the lens or other portions of the glass.

With the above and other objects in view, the invention resides in the sundry details of construction, combination and arrangement of parts hereinafter more fully described and pointed out in the appended claims.

In the accompanying drawing, which shows the preferred embodiment of the invention as at present devised:—

Fig. 1 is a side elevation of the tool;

Fig. 2 is an enlarged elevation of the jaws of the tool, with the ends thereof shown in section to illustrate details of construction;

Fig. 3 is a section of Fig. 2 taken substantially on line 2—2 and illustrating the tool as it is applied for use, and;

Fig. 4 is a similar view to Fig. 3 but illustrating a position of the parts of the tool while being used.

Referring specifically to the drawing in which like characters denote similar and like parts throughout the several views, 10 denotes the body of the tool which is in the form of a pair of pliers of any well known or approved construction which comprise opposed jaws *a* and *b* which may be opened and closed through the medium of handle portions *c* and *d* connected to the jaws respectively. In the type of pliers shown the jaws are moved toward each other when the handle portions are pressed toward each other and are separated when the handle portions are moved away from each other.

The jaws *a* and *b* of the present tool are shown as preferably spaced apart in their normal closed position, this spacing being somewhat less than the thickness of the bifurcated lug or lens strap 11 usually found on parts of the eyeglass mountings and between which the lens 12 is inserted. It is to be understood, however, that this spacing of the jaws is not necessary but is found desirable. The end portions of one of the jaws, for instance jaw *a*, is provided with a transverse opening 13 extending from the inner face of the jaw to the outer face thereof and in which is loosely disposed and held a cap or cup 14 of a diameter greater than that of the opening 13 to permit universal movement of the shank 16 in the opening 13; or other suitable connection may be provided which will permit universal movement of the cap 14. The cap 14 will fit over and bear against the head of the fastening screw 15, which passes thru the strap or bifurcated lug 11 to hold the lens therein. The cap or cup 14 has a stem or shank 16 extending therefrom into and thru the opening 13 of the jaw *a* and is of a length considerably greater than the length of the opening. The cup or cap 14 is held in the jaw by a disc or washer 17 secured on its free end and of a diameter larger than that of the opening 13, the diameter of the opening 13 being considerably greater than that of the stem 16.

A peening element 18 is provided on the jaw *b* in alinement with the opening 13 and is disposed on the inner face of the jaw. This peening element consists of a rounded enlargement having a convexed outer surface and may be semi-spherical or less than semi-spherical. As an example this peening element 18 may consist of a steel rivet having a rounded head which extends thru an opening in the jaw *b* and suitably held therein by any suitable means such as at 19. The peening element is preferably immovably fixed in position, but may be removable so as to be replaced should it become worn or mutilated.

The present tool is brought into use after the lens has been placed in the bifurcated lug or strap 11 which may be carried by the nose or bridge piece of spectacles or eyeglasses or by the ear pieces 20 thereof, as shown in Figs. 3 and 4, and the securing screw 15 inserted thru the lug and the lens, one end of the screw being threaded in one of the bifurcated portions thereof. To use the tool the cup 14 is placed over the head of the screw 15 and the jaws of the implement closed by pressure on the handles *c* and *d* to bring the peening element 18 into contact with the

threaded end of the screw 15 which normally projects a slight distance beyond the lug or strap 11. By exerting continued pressure on the handles *c* and *d* of the implement and by rocking the implement about the cup member 14, the peening element 18 will spread the end 15ª of the screw to up-set it in such a manner as to "peen it over" or to form a rivet end thereon, as shown, so that the screw 15 cannot come loose and fall out of position. This rocking or peening action of the implement is allowed by the slot or opening 13 in the jaw *a*, which is larger than the diameter of the stem or shank 16 of the cup 14, while at the same time an edge portion 13ª of the opening 13 will bear upon the surface of the cup to clamp it in position on the head of the screw 15, as shown particularly in Fig. 4.

The present implement is a very simple device for peening the ends of eyeglass mounting screws, while at the same time permitting this to be done with ease and celerity and without the likelihood of breaking the lens as the major pressure at all times is directly thru the screw and not upon the strap or lug 11 or the lens 12.

Having thus described the invention and the manner in which the same is to be used, it is to be understood that the invention is not limited to the specific construction herein shown and described, as one example, but, may be modified and varied to whatever form may be desired, within the scope of the appended claims.

What is claimed is:

1. A tool for peening screws and like comprising a pair of members adapted to be moved toward and away from each other, one of said members being provided with a loosely mounted element adapted to fit over and bear against the head of the screw and the other member being provided with a convexed peening element adapted to engage the other end of the screw, whereby the peening element may be moved over the end of the screw to upset the same while the other of said elements is in contact with the head of the screw when the tool is moved to rock the peening element.

2. A tool for peening screws and like comprising a pair of members adapted to be moved toward and away from each other, one of said members being provided with an element movably connected thereto for substantial universal movement with respect to said member and adapted to fit over and bear against the head of the screw and the other member being provided with a projecting convexed peening element adapted to engage the other end of the screw, whereby the peening element may be moved over the end of the screw to upset the same while the other of said elements is in contact with the head of the screw when the tool is moved to rock the peening element.

3. A tool for peening screws and the like comprising a pair of members adapted to be moved toward and away from each other, a cap element loosely mounted on one of said members to engage the head of the screw, a convexed enlargement on the other of said members to engage the end of the screw, whereby the enlargement may move over the end of the screw to upset the same when said tool is rocked with said cap bearing against the head of the screw, said cap having its screw-head engaging surface complemental to the surface of the screw-head and having a shank extending in an opening in its carrying member, which opening is larger than said shank.

4. A tool for peening screws and the like comprising a pair of members adapted to be moved toward and away from each other, a cap element loosely mounted on one of said members to engage the head of the screw, a convexed enlargement on the other of said members to engage the end of the screw, whereby the enlargement may move over the end of the screw to upset the same when said tool is rocked with said cap bearing against the head of the screw, said enlargement comprising a headed element removably mounted in its carrying member and disposed substantially opposite the opening in said cap carrying member, when the parts are in operative position.

5. A tool of the character described comprising a plier-type-implement having jaws movable toward and away from each other, one of said jaws having a transverse opening in an outer end portion thereof, a cup-shaped cap disposed at the inner face of said last mentioned jaw and larger than said opening, a shank on the cap of less thickness than the width of said opening and extending into and thru said opening whereby it is loose in the latter, means on the outer end of said shank for maintaining it in said opening, a rounded-convexly surfaced peening element stationarily disposed at the face of said other jaw and in substantial alignment with the opening in said first jaw, when the jaws are in operating position.

6. A tool as set forth in claim 5 further characterized by said peening element being removable for replacement.

AUGUSTINE T. ROCHTE.