Dec. 11, 1951 J. M. HANERT 2,577,753

ELECTRICAL MUSICAL INSTRUMENT WITH TONE SUSTAINING MEANS

Filed Aug. 22, 1949 2 SHEETS—SHEET 1

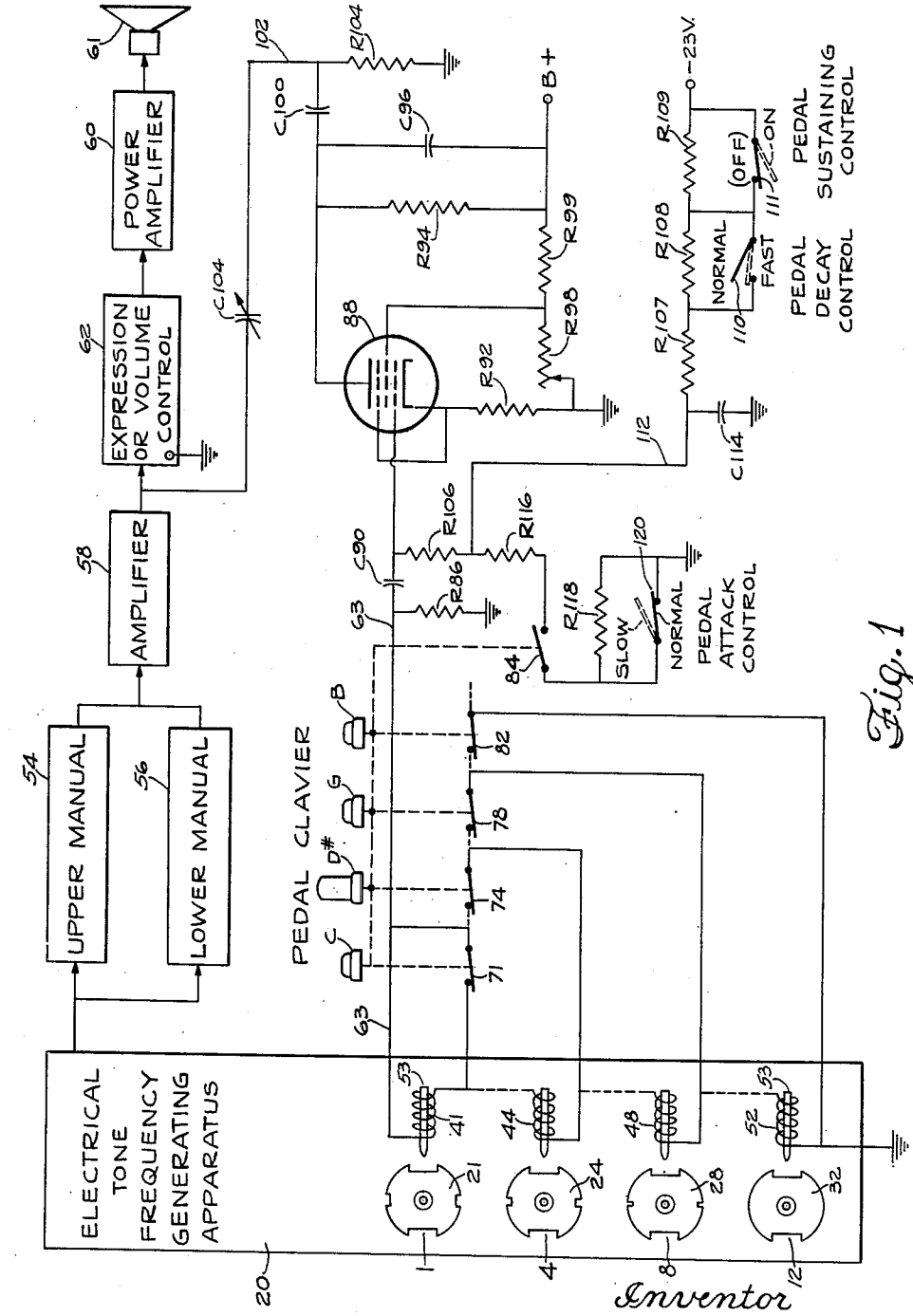

Fig. 1

Inventor
John M. Hanert
By Benjamin F. Wupper
Atty.

Dec. 11, 1951 J. M. HANERT 2,577,753

ELECTRICAL MUSICAL INSTRUMENT WITH TONE SUSTAINING MEANS

Filed Aug. 22, 1949 2 SHEETS--SHEET 2

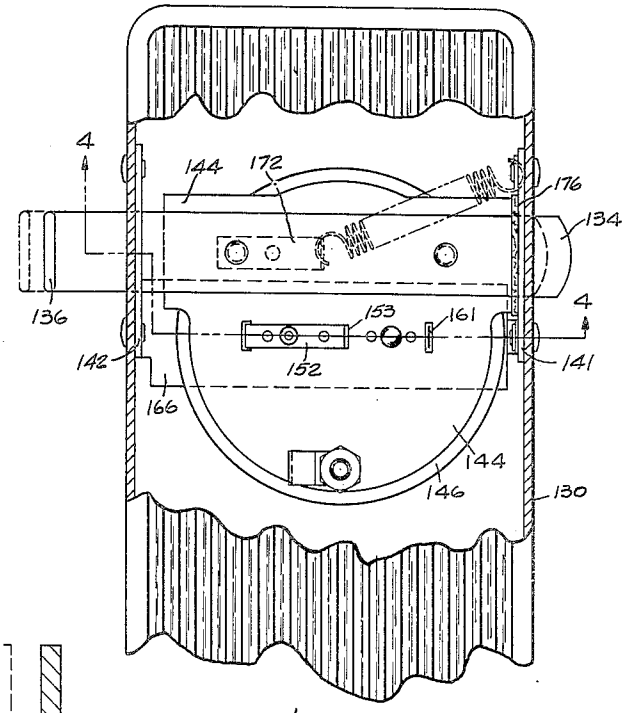

Fig. 2

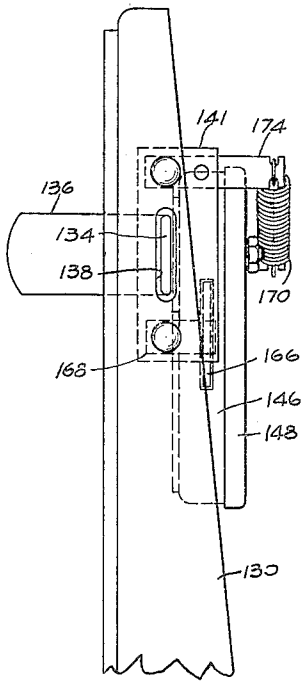

Fig. 3

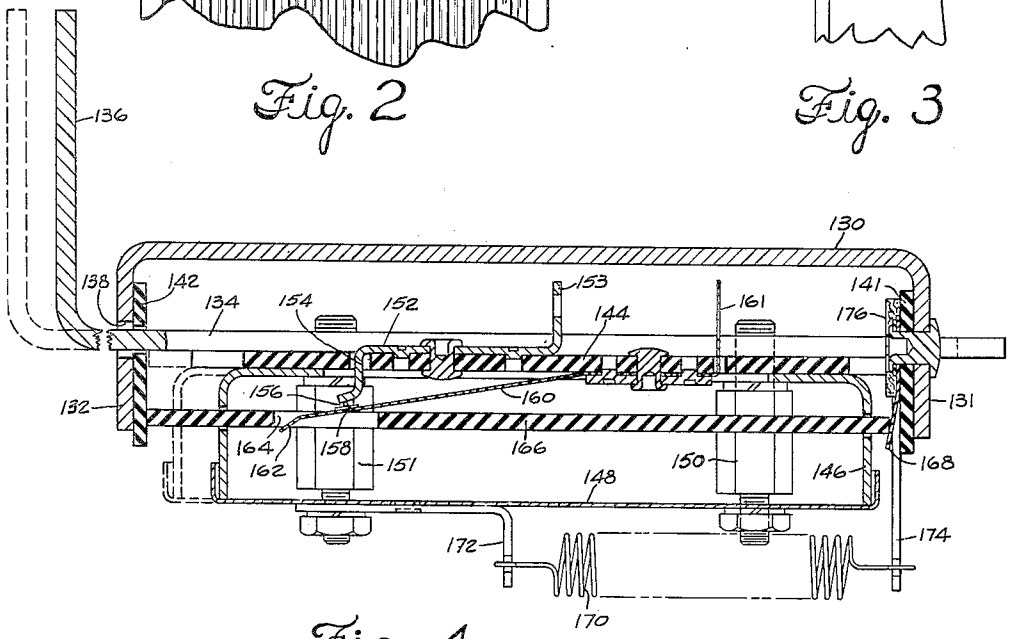

Fig. 4

Inventor
John M. Hanert
By Benjamin F. Wupper
Atty.

Patented Dec. 11, 1951

2,577,753

UNITED STATES PATENT OFFICE

2,577,753

ELECTRICAL MUSICAL INSTRUMENT WITH TONE SUSTAINING MEANS

John M. Hanert, Park Ridge, Ill., assignor to Hammond Instrument Company, Chicago, Ill., a corporation of Delaware

Application August 22, 1949, Serial No. 111,742

6 Claims. (Cl. 84—1.26)

1

My invention relates generally to electrical musical instruments and more particularly to improved means whereby the bass pedal controlled tones may be sustained after pedal release.

It is frequently desirable, in playing an electrical musical instrument; such as an electric organ, to produce sustained bass tones. When a number of such sustained bass tones are to be sounded in succession, the organist must use both feet on the pedal clavier if the tones are to be sounded in close succession. Since the organist's right foot is required for the operation of the expression pedal, it will be apparent that considerable skill is required to play a number of sustained bass pedal tones in succession, unless the pedals to be played in succession are adjacent one another.

If the bass notes are played in immediate succession, the music will sound good even if the instrument is being played in an acoustically "dead" room, because the continuously sounding bass tones produce an effect akin to that of reverberation, and this is especially the case if the bass tones decay slowly.

It is an object of the invention to provide an electrical musical instrument in which the pedal controlled bass tones have substantial decay periods, and in which the decay period may be greatly extended by the operation of a sustaining control.

A further object is to provide an electric organ having a tone sustaining control which may be operated easily by the organist's right foot.

A further object is to provide an improved tone intensity envelope determining circuit arrangement including a foot-operable switch for changing the tone decay rate.

A further object is to provide an improved electric organ in which the playing of the pedal bass notes is facilitated.

Other objects will appear from the following description, reference being had to the accompanying drawings, in which:

Fig. 1 is a schematic circuit and block diagram of an electric organ incorporating the invention;

Fig. 2 is a fragmentary sectional view of the expression pedal showing the sustaining switch secured thereto;

Fig. 3 is a side elevational view of the sustaining switch and a portion of the expression pedal; and

Fig. 4 is a sectional view taken on the line 4—4 of Fig. 2.

2

Referring to Fig. 1, the instrument comprises an electrical tone signal generating apparatus 20 including four generators 1, 4, 8 and 12 generating electrical tone signals for the lowest octave notes C, D♯, G and B respectively. These four generators are representative of twelve generators for the twelve lowest bass pedal controlled notes in the gamut of the instrument. These generators 1, 4, 8 and 12 comprise notched magnetic tone wheels 21, 24, 28 and 32 and pickup coils 41, 44, 48 and 52 respectively, the latter being wound on permanent magnets 53, having wedge shaped ends near the edges of the tone wheels. The tone wheels 1, 4 and 8 have equally spaced pairs of wide and narrow peripheral notches and thus each generates a musically desirable signal representing a complex tone coupled with a complex octave tone. The octave coupler effect is not desired on the three highest pitched generators for the bass octave and thus the tone wheel 32 has only one pair of notches.

The generators for the manuals may be of any desired construction but preferably generate substantially sine wave signals and may be of the construction shown in the patent to Laurens Hammond, 1,956,350, dated April 24, 1934. All of the generators are preferably driven by a synchronous motor through suitable gearing of the type shown in said patent.

The instrument in which the invention is used will usually include an upper manual 54 and a lower manual 56', each including suitable quality controls, and the tone signals controlled by these manuals are supplied to an amplifier 58. The output of the amplifier is transmitted to a power amplifier 60 and speaker 61 through a suitable expression or volume control means 62.

The pickup coils for the bass octave generators which includes coils 41, 44, 48, and 52 are connected in series between ground and a conductor 63, and each of these coils normally has its terminals connected together by switches 71, 74, 78, and 82 respectively, which are operated by pedals C, D♯, G and B respectively.

The switches 71, 74, 78 and 82 are of the "flexible" latching type, that is, when any switch is opened by depression of its associated pedal, it will remain open until another pedal is depressed to open its associated switch. Thus a signal of pitch corresponding to the last depressed pedal will appear between the conductor 63 and ground.

In addition to operating one of the switches, of which switches 71, 74, 78, and 82 are representative, each of the pedals operates a switch 84

through a suitable bail mechanism, the switch being closed upon depression of any pedal and opened only when all pedals are released. This pedal switching mechanism may be of the type disclosed in the patent to Laurens Hammond, et al., No. 2,480,132, dated August 30, 1949.

The signal conductor 63 is connected to ground through a load resistor R86 and is connected to the control grid of a control and amplifying remote cutoff pentode 88 through a capacitor C90. The cathode of tube 88 is connected to ground by a resistor R92, its suppressor grid is connected to the cathode, and its anode is connected by a load resistor R94 with a suitable source of plate voltage, indicated as a terminal B+, there being a capacitor C96 in parallel with resistor R94 to filter undesirable high frequencies from the signal. A suitable operating potential is applied to the screen grid from the junction between variable resistor R98 and fixed resistor R99 which form an adjustable voltage divider connected between the B+ terminal and ground. The output signal of the pentode 88 is transmitted through blocking capacitor C100 to a conductor 102, the latter being connected to ground by a high value coupling resistor R104. The conductor 102 is connected to the input of the expression or volume control 62 by a manually adjustable variable capacitor C104 by which the volume of the pedal tones, relative to those of the manuals, may be varied.

The pentode 88 is normally biased beyond cutoff by being connected to a suitable negative bias terminal —23 V. of the power supply, this connection being through resistors R106, R107, R108 and R109. Resistors R108 and R109 may be effectively cut out of this circuit by closure of switches 110 and 111 respectively. Conductor 112 connected to the junction between resistors R106 and R107, is connected to ground by a capacitor C114, and is connected to switch 84 by an attack resistor R116. The other pole of switch 84 is connected to ground by resistor R118, but the latter may be rendered ineffective by manually closing a switch 120.

The operation of switches 84, 120, 110 and 111 determines the character of the intensity envelopes of the tones produced in the following manner:

Assuming that these switches are in the positions in which they are shown in full lines in Fig. 1, the depression of any of the pedals, in addition to opening its associated switch, of which switches 71, 74, 78, and 82 are representative, will result in closing switch 84, thereby connecting conductor 112 to ground through resistor R116, increasing the potential on this conductor from its normal approximately —23 V. value at a rate determined mainly by the relative values of capacitor C114 and resistor R116. The time constant of the C114—R116 mesh is such that the voltage on the control grid of pentode 88 will increase rapidly so that the pentode will transmit the tone signal with a rapid but not too abrupt attack. The rate of attack may be lessened by opening switch 120 which puts resistor R118 in series with resistor R116 and thus increases the time constant of the C114—R116—R118 mesh. After a short time the voltage on conductor 112, and hence on the control grid, will attain its maximum value and the tone signal will thereafter be transmitted by pentode 88 at a constant volume until the depressed pedal is released and switch 84 thus opened.

When the switch 84 is opened the potential on the conductor 112, and hence on the control grid, decreases as the capacitor C114 is recharged from the —23 V. terminal through resistors R107 and R108 if switches 110 and 111 are in their normal positions, i. e. switch 110 open and switch 111 closed. The potential on conductor 112, and on the control grid will therefore gradually return to —23 V. and the tone signal transmitted will decay gradually to zero amplitude.

It will be apparent that the rate of decay will be determined by the resistance of the path by which capacitor C114 is recharged. Therefore, if a fast decay is desired, switch 110 is closed effectively to remove resistor R108 from the circuit through which capacitor C114 is recharged. On the other hand, if a sustained tone with a very long decay period is desired, sustaining switch 111 is opened.

The following are illustrative of suitable constants which may be employed in the attack and decay control circuits, assuming that pentode 88 is of the 6BA6 type:

R106	megohm	1
R107	do	1.2
R108	do	3.9
R109	do	22.
R116	do	.047
R118	do	.1
C114	microfarad	.5

It will be noted that resistor R109 has a value very much greater than resistors R107 and R108, so that when resistor R109 is in the charging circuit for capacitor C114 the tone will decay so slowly that it will ordinarily be perceived as a sustained tone. This sustaining feature is of great utility because the tone continues to sound after the player removes his foot from the pedal and until he depresses another pedal to cause a different tone to sound, provided the time interval is not too great, for example, not more than ten seconds.

Since the switch 111 will be used very frequently in the rendition of most musical selections, it is highly desirable that it be easily operable by the player. Because of the fact that the player's hands are fully occupied in playing on the manuals, his left foot is engaged in operation of the bass pedals, and his right foot is normally on the swell pedal, the location and manner of operation of this switch presented a problem. The switch shown in Figs. 2, 3 and 4 constitutes a very satisfactory solution of this problem, since it is mounted on the expression (volume control) pedal and may be operated by the right foot without interfering with the operation of the expression pedal.

The expression pedal 130, except for the addition of the sustaining switch, is of conventional construction and pivotally mounted in the usual manner. The pedal 130 is of inverted channel shape, having side flanges 131 and 132. The actuating means for the switch comprises a crossbar 134 having an upturned end portion 136 conveniently positioned for operation by sideward movement of the toe while the foot is resting on the pedal 130. The bar 134 extends freely through holes 138 formed in the pedal flanges 131 and 132 and is guided for longitudinal sliding movement by a pair of slotted plates 141 and 142 respectively riveted to flanges 131 and 132. These plates are preferably made of a suitable insulating material such as sheet "Bakelite."

An insulating plate 144, a shell 146, and a shell cover 148, are secured to the bar 134 by a pair

of pillars 150, 151. A switch arm 152 is riveted to the plate 144, having a soldering lug 153 at one end and a contact portion 154 at the other end, the latter extending through a suitable hole in the plate 144 and having a short piece of contact wire 156 welded thereto. The wire 156 is normally in contact with a transverse contact wire 158 welded to a resilient arm 160. This arm is riveted to the plate 144 and at one end has a soldering lug 161 extending through the plate. The other end 162 of arm 160 extends through a hole 164 in an insulating strip 166 and is bent at an angle suitable for coming into engagement with the edge at the left hand (Fig. 4) side of the hole 164. The strip 166 extends through suitable guide holes in the shell 146 and has its left hand end held in abutting engagement with the slotted plate 142 by a slack take-up leaf spring 168 which is riveted to flange 131.

Thus when the bar 134 is moved to the left (Figs. 2 and 4) the end 162 of contact arm 160 engages the edge of the strip 166 around the hole 164 and the arm is flexed downwardly to separate contact wires 156 and 158 and open the circuit. When the bar 134 is released it is returned to normal position by a coil spring 170 tensioned between a bracket 172 secured to pillar 151 and a rigid arm 174 riveted to flange 131. The right hand edge of plate 144 engages a noise reducing felt pad 176 to limit the rightward movement of the actuating bar 134 and all of the parts carried thereby. As the parts move to the right the spring contact arm 160 restores itself to contact marking position.

The switch mechanism shown in Figs. 2, 3 and 4 is thus conveniently operable by the player's foot while resting on the swell pedal. A slight leftward movement of the toe portion of the foot results in opening the sustaining switch and causing the tones to decay very slowly enabling the player to shift his left foot leisurely from pedal to pedal without causing any interruption of the bass tone accompaniment.

While I have shown and described a particular embodiment of my invention, it will be apparent to those skilled in the art that numerous modifications and variations may be made in the form and construction thereof, without departing from the more fundamental principles of the invention. I therefore desire, by the following claims, to include within the scope of my invention all such similar and modified forms of the apparatus disclosed, by which substantially the results of the invention may be obtained by substantially the same or equivalent means.

I claim:

1. In an electrical musical instrument having an electrical tone signal generating system, an output system including an expression pedal, and selectively operable keys for causing transmission

to the output system of signals from the generating system with predetermined rates of attack and decay, means for greatly reducing the decay rate including a switch, and operating means for the switch mounted on the expression pedal and operable by the player's foot while positioned on the expression pedal.

2. In an electrical musical instrument having a pedal clavier for controlling the selection of bass tones to be played, an expression pedal for controlling the intensity of the tones produced, sustaining means to cause a tone to continue to sound after the release of the pedal by which it was selected, and a control device for selectively rendering the sustaining means effective, said device including an element mounted on the expression pedal and engageable by the player's foot while the foot is in position for operating the expression pedal.

3. In an electrical musical instrument, an expression pedal operable by the right foot of the player, a pedal clavier for selecting the tones to be produced and normally operated by the left foot, means to cause the tones selected by the operation of the pedal clavier to decay very slowly, a switch controlling the operation of the slow decay causing means, and an element for operating said switch located so as to be operable by the right foot of the player while the foot is operatively positioned on the expression pedal.

4. In an electrical musical instrument having an expression pedal, electrical means for causing tones to be sustained, a switch for controlling the operation of the electrical sustaining means, and an element connected to the switch for operating it, said element having a part engageable by the player's foot while the foot is in position to operate the expression pedal.

5. In an electrical musical instrument having an expression pedal, electrical means for causing tones to be sustained, a switch mounted on the expression pedal for controlling the operation of the electrical sustaining means, and a switch actuating element movable transversely of the pedal and having a part extending above the plane of the top of the sustaining pedal along the side thereof and operable by the player's foot while resting on the pedal.

6. In an electrical musical instrument having an output system including an expression pedal, a control tube for transmitting electrically generated signals under the control of player operated keys, attack and decay determining meshes associated with said tube, a switch connected to said mesh operable greatly to prolong the decay of the tones, and means engageable by the foot of the player, while it is operatively positioned on the expression pedal, for operating said switch.

JOHN M. HANERT.

No references cited.