PCT WORLD INTELLECTUAL PROPERTY ORGANIZATION
International Bureau

EP 7945

INTERNATIONAL APPLICATION PUBLISHED UNDER THE PATENT COOPERATION TREATY (PCT)

(51) International Patent Classification: F04B 43/06, 9/12; F01L 23/00, 25/04	A1	(11) International Publication Number: WO 79/00197
		(43) International Publication Date: 19 April 1979 (19.04.79)

(21) International Application Number: PCT/GB78/00021

(22) International Filing Date: 11 October 1978 (11.10.78)

(31) Priority Application Number: 42208/77

(32) Priority Date: 11 October 1977 (11.10.77)

(33) Priority Country: GB

(71) Applicants: CHARLES S. MADAN & COMPANY LIMITED; Vortex Works, Atlantic Street, Broadheath, Altrincham, Cheshire, United Kingdom *(for all designated States except US)*. BALME, Roy; Two Trees, Grey Road, Altrincham, Cheshire, United Kingdom *(for US only)*. PERKINS, John, Francis; 10 Lodge Road, Knutsford, Cheshire, United Kingdom *(for US only)*. GUNATILLEKE, Nammunikankanange, Navinchandra; 7 Egerton Road, Manchester, United Kingdom *(for US only)*.

(72) Inventors: BALME, Roy; Two Trees, Grey Road, Altrincham, Cheshire, United Kingdom. PERKINS, John, Francis; 10 Lodge Road, Knutsford, Cheshire, United Kingdom. GUNATILLEKE, Nammunikankanange, Navinchandra; 7 Egerton Road, Manchester, United Kingdom.

(74) Agent: SERJEANTS, 25 The Crescent, King Street, Leicester, United Kingdom LE1 6RX.

(81) Designated States: DE, FR (European patent), GB, JP, LU, SE, US.

Published with:
International search report
Amended claims

Great Britain
24 APR 1979

(54) Title: DIAPHRAGM PUMPS

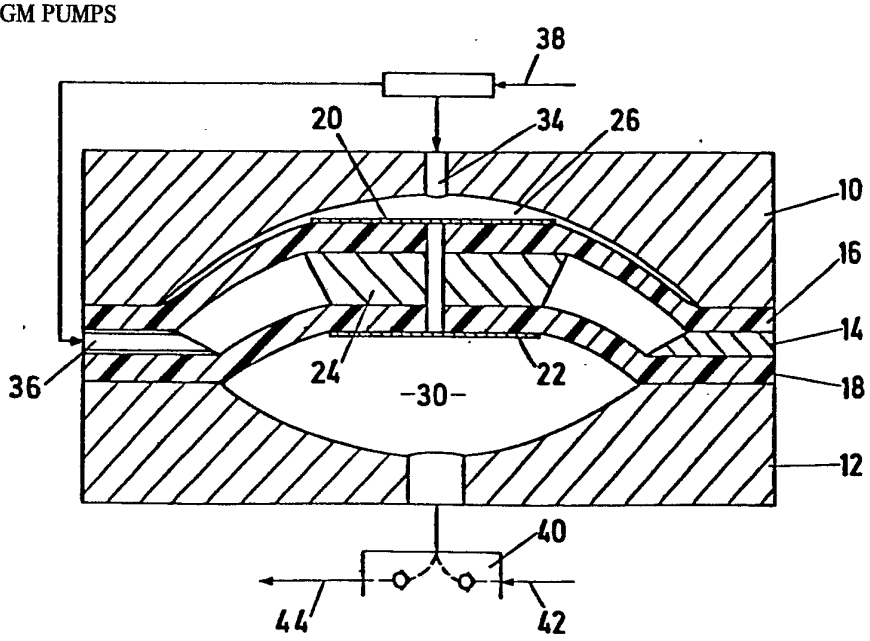

(57) Abstract

Diaphragm pumps are used for pumping liquids and comprise rods passing through a housing for effecting diaphragm return movement. This invention provides a novel diaphragm pump which avoids the use of those rods. The novel pump has an air chamber (26) and a pumping chamber (30) separated by a composite diaphragm (16, 18). Feeding compressed air to the air chamber (26) moves the diaphragm to effect a pumping stroke. The return stroke of the diaphragm is achieved by exhausting the air chamber (26) while feeding compressed air to a further air chamber formed between first (16) and second (18) membranes of the composite diaphragm. The area difference between the membranes is sufficient to make the composite membrane (16, 18) self-erecting, to draw fluid into the pumping chamber (30) ready for the next pumping stroke of the diaphragm.

FOR THE PURPOSES OF INFORMATION ONLY

Codes used to identify States party to the PCT on the front pages of pamphlets publishing international applications under the PCT

BR	Brazil	**JP**	Japan
CF	Central African Empire	**LU**	Luxembourg
CG	Congo	**MG**	Madagascar
CH	Switzerland	**MW**	Malaŵi
CM	Cameroon	**SE**	Sweden
DE	Germany, Federal Republic of	**SN**	Senegal
DK	Denmark	**SU**	Soviet Union
FR	France	**TD**	Chad
GB	United Kingdom	**US**	United States of America

DIAPHRAGM PUMPS

DESCRIPTION

This invention relates to positive displacement air-powered diaphragm pumps. Such pumps apply compressed air to one side of a diaphragm so as to transmit the pressure of the air to fluid on the other side of the diaphragm. Diaphragm movement effects positive displacement of the fluid at a pressure substantially equal to the pressure of the motive air. However if the pump is to be self-priming means must be provided for drawing the diaphragm back for a repeat pumping stroke. This drawing back movement of the diaphragm is referred to herein as the return stroke, and must be capable of drawing a substantial head of fluid from a source to the pump.

One prior proposed air powered diaphragm pump comprises two diaphragms each associated with its own pumping chamber for fluid to be pumped and its own air chamber for compressed air. The diaphragms are interconnected by a shaft passing through the two air chambers, and valving ensures that compressed air is supplied to and exhausted from the two air chambers alternately. Thus when one of the air chambers is supplied with compressed air the other is exhausted, and the diaphragm associated with the pressurized air chamber effects its pumping stroke. This diaphragm movement is transmitted via the shaft to the other

BUREAU OMPI WIPO INTERNATIONAL

diaphragm so as to cause it to effect its return stroke and draw more fluid from the source. Such a pump is referred to herein for convenience as a back-to-back pump, as it consists of two single acting diaphragm pumps mounted back to back and having the diaphragms interconnected so as to move only in unison. It is essentially a double-acting pump, as the diaphragms effect their pumping strokes alternately. It has, however, certain limitations and disadvantages as will be apparent below.

It is bulky, as the shaft connecting the diaphragms has to pass through both air chambers and through a bore in a wall separating the air chambers while maintaining an adequate air seal. Packing members have to be provided around the shaft as it passes through the bore, so as to maintain an adequate air seal between the chambers to allow for one chamber to be pressurized while the other is exhausted. Failure of these packing members causes a loss of efficiency of the pump or even total pump failure, and their replacement involves dismantling of much of the pump.

In order to reduce wear on the packing members the width of the wall separating the air chambers has been increased, so that the shaft is supported over a longer axial length and is more adequately constrained to

BUREAU OMPI WIPO INTERNATION

axial movement. Although this reduces the stresses at the bore and the packing members, it has the effect of increasing stress at the diaphragms and is thought adversely to affect diaphragm life. A rubbery diaphragm subjected to a reversed pressure differential across its working faces will tend to follow a non-linear path from one working position to another. Inequalities in the material of the diaphragm, and internal stresses therein, mean that one edge of the diaphragm will tend to move before a diametrically opposite edge, so that the diaphragm rolls from one axial position to the other. Connecting centre plates of the two diaphragms with a shaft as in the back-to-back pumps means that only axial diaphragm movement is permitted. The result is a tendency for wear of the diaphragms in a zone of maximum stress immediately around the centre plates.

This invention comprises a positive displacement diaphragm pump having an air chamber, a pumping chamber for fluid to be pumped, and a composite diaphragm between the air chamber and the pumping chamber, characterised in that the composite diaphragm comprises a first membrane communicating with the air chamber, a second membrane of smaller area than the first communicating with the pumping chamber, and a further air chamber between, and defined by, the first and second membranes, and means is provided for alternately

BUREAU OMPI WIPO INTERNATIONAL

supplying compressed air to the air chamber to effect a pumping stroke of the composite diaphragm and exhausting the air chamber while supplying compressed air to the further air chamber to effect a return stroke of the composite diaphragm.

The composite diaphragm of the pump of this invention may be considered self-erecting in that it is air pressure between the two membranes that effects the return stroke rather than a shaft passing through two air chambers as in the conventional back-to-back pumps. The area difference between the two membranes causes return stroke movement, and suitable design and choice of the membrane areas enables a desired head of fluid to be drawn on the return stroke of the diaphragm.

The composite diaphragm may comprise a pair of spaced diaphragms linked at their mid points by a connecting shaft or plate so as to move only in unison. A connecting plate used for such a purpose conveniently serves also as a backing plate for the centre plate of each diaphragm.

Alternatively the composite diaphragm may comprise first and second spaced membranes which are joined over the whole of their facing surfaces by a non-cellular porous spongy material. This spongy material should be air-permeable so that although it bonds the membranes

BUREAU OMPI WIPO INTERNATION

to one another to move only in unison, it also defines the further air chamber therebetween.

The materials for the two membranes may be the same or different. The first membrane is in contact only with air on both sides thereof, and if desired a lower standard material may be used than for the second membrane one side of which contacts the fluid to be pumped. For example, a rubberized asbestos or rubberized canvas diaphragm may be used as the first membrane while a more durable diaphragm, such as one made from a Viton (Trade Mark), neoprene, polyurethane, butyl or nitrile high resistant rubber, may be used as the second membrane. Clearly the choice of material for the second membrane is related to the nature of the fluids to be pumped.

A pump according to this invention has all the versatility of conventional diaphragm pumps as regards the range of fluids that can be pumped. It can cope with liquids of high viscosity, up to and including pastes, and with slurries of even quite large particles. Because there are no pistons, shafts, sliding seals or rotating parts, the pump is particularly dependable in use. Conventional non-return valves may be used in the fluid supply and delivery lines.

The means for controlling the air supply to the air chamber and the further air chamber may be any

BUREAU

conventional air valve, such as a spool or shuttle valve. The air valve may be controlled by mechanical means, such as a probe extending into the air chamber and responsive to the position of the composite diaphragm. Alternatively it may be controlled by air logic, utilizing small changes in the air pressure at a pilot pressure port to determine when the composite diaphragm is at the ends of its stroke; or it may operate on a time sequence; or it may be responsive to an operator's control.

For effecting the pumping stroke of the composite diaphragm, compressed air is supplied to the air chamber. At this time the further air chamber between the membranes may be exhausted if desired, or may be maintained at air supply pressure. In the latter case, the pressure acting on the two membranes of different areas in the further air chamber will oppose the pumping action, but this effect will be small in comparison to the force of the air acting on the whole area of the first membrane in the air chamber, so that the reduction in the maximum delivery pressure of the pump will be slight. This arrangement has certain advantages in reducing the stress on the composite membrane, and will in many cases be preferred on the basis of longer membrane life.

The pump of this invention has so far been described in terms of a single acting pump which delivers a pulsating output pressure from alternate pumping

BUREAU OMPI WIPO

and return strokes of the diaphragm. If desired two such pumps can be used in concert, fed by air from the same air valve effective to cause the two composite diaphragms to produce their pumping strokes alternately. The physical arrangement of the two pumps is not however limited to back-to-back as in the prior art pumps, as there is no mechanical connection between the composite diaphragms of the two pumps.

This invention is hereinafter described, by way of example only, with reference to the drawings of which:

Figure 1 is an axial section through a pump according to this invention with the composite diaphragm at the beginning of its working stroke;

Figure 2 is an axial section through the pump of Figure 1, with the composite diaphragm at the end of its working stroke and about to begin its return stroke; and

Figure 3 is a schematic diagram showing how two pumps according to Figure 1 can be connected together to provide a substantially constant pressure output.

Referring first to Figures 1 and 2, the pump comprises a housing formed from housing halves 10 and 12 between which is a spacer ring 14. Clamped between the housing half 10 and the spacer ring 14 is a first diaphragm 16, and clamped between the spacer ring 14

BUREAU OMPI WIPO INTERNATIONAL

and the housing half 12 is a second diaphragm 18. The whole is clamped together by means of bolts (not shown) so as to provide a reliably fluid tight seal around the edges of the two diaphragms.

The first diaphragm 16 is provided with a cover plate 20 and the second diaphragm 18 is provided with a cover plate 22. Each of these cover plates 20 and 22 is fastened securely to a spacer disc 24 by means of bolts (not shown) so that the two diaphragms are permitted to move only in unison. The two diaphragms 16 and 18, their cover plates 20 and 22 and the spacer disc 24 thus form a composite diaphragm that is movable between the two positions shown in Figures 1 and 2.

The first diaphragm 16 and its cover plate 20 are larger in diameter than the second diaphragm 18 and its cover plate 22.

Between the first diaphragm 16 and the housing half 10 is formed an air chamber 26, and between the first and second diaphragms 16 and 18 is formed a further air chamber 28. Between the second diaphragm 18 and the housing half 12 is formed a pumping chamber 30 for fluid to be pumped. The supply of compressed air to the air chamber 26 and the further air chamber 28 is controlled by an air control valve 32 which alternately directs the compressed air to an air port 34 leading to

BUREAU OMPI WIPO INTERNATION

the air chamber 26 and to an air port 36 leading to the further air chamber 28. The air port 36 is provided as a radial bore through the spacer ring 14. Air is supplied to the air control valve from any suitable compressed air source, through a line 38.

Communicating with the pumping chamber 30 is a fluid valve assembly 40, which comprises a pair of one-way valves. The valves permit fluid flow in a line 42 from a fluid source only in a direction towards the pumping chamber, and permit fluid flow in a delivery line 44 only in a direction away from the pumping chamber.

In use, when the composite diaphragm is at the beginning of a pumping stroke as shown in Figure 1, the air control valve 32 directs compressed air from the supply line 38 to the air chamber 26 through the air port 34, and exhausts air from the further air chamber 28 via the air port 36. The air pressure in the air chamber 26 acts over the whole of the area of the first diaphragm so as to move the diaphragm from the position of Figure 1 to that of Figure 2. This has the effect of expelling the fluid from pumping chamber 30 via the fluid delivery line 44 at a maximum discharge pressure that is directionally proportional to the pressure of the compressed air.

From the position of Figure 2, the composite diaphragm is returned to the position of Figure 1 by

BUREAU OMPI WIPO INTERNATIONAL

means of the air control valve 32 which reverses its porting so as to supply compressed air from the supply line 38 through the air port 36 into the further air chamber 28, while exhausting air from the air chamber 26. The working area of the first diaphragm 16 forming one boundary of the further air chamber 28 is greater than the corresponding working area of the second diaphragm 18. A net upward force is therefore imparted to the composite diaphragm, with the effect that it goes on its return stroke to the position of Figure 1. The force imparted to the composite diaphragm on its return stroke by the compressed air in the further air chamber 28 is dependent on the pressure of the air from the supply and the difference in working areas of the two diaphragms. It is however perfectly feasible to design a pump according to this invention which can draw fluid, on the return stroke, at the theoretical maximum head of 34 feet for water, while still maintaining substantial reserves of energy to move the composite diaphragm at any maximum speed that can be desired in practice.

There is no constraint on the composite diaphragm as it moves from one axial position to the other, other than the peripheral anchorage of the first and second diaphragms 16 and 18. Thus if the natural movement of the diaphragm is to flex so that the right hand side

BUREAU OMPI WIPO INTERNATIONAL

as viewed in Figure 2, for example, begins to rise first, then the cover plates and spacer disc 20, 22 and 24 can tilt or roll as the diaphragm moves. In this way internal stresses in the diaphragms 16 and 18 are kept at a minimum.

Although Figures 1 and 2 do not illustrate any particular means for governing the operation of the air control valve 32, it will be understood that this valve could be actuated by a timer mechanism, or by a sensor mechanism or by a combination of both. The timer mechanism would simply reverse the actuation of the air control valve repeatedly after successive time intervals. A sensor mechanism would be responsive to a pilot pressure, representative of the pressure in the air chamber 26, or would be responsive to the position of the cover plate 20. For example, a push rod may extend downwardly through the air port 34 so as to contact the cover plate 20. At an upward limit of the movement of the cover plate 20, the push rod would cause reversal of the actuation of the air control valve so as to supply compressed air to the air chamber 26 and exhaust the further air chamber 28, to drive the diaphragm on its pumping stroke. Further reversal of the actuation of the air control valve at the completion of the pumping stroke could then be achieved by biassing the push rod downwardly against the cover plate 20, for example by means of a spring or air pressure, so that the air control valve can sense the completion of the pumping stroke.

BUREAU OMPI WIPO INTERNATIONAL

In a modification of the pump above described, compressed air from the air line 38 could be supplied at all times to the further air chamber 28 through the air port 36. The effect would be that on the pumping stroke of the diaphragm, the compressed air in the further air chamber 28 would oppose the diaphragm pumping movement with force that is directly related to the difference in working area between the first and second diaphragm. Because this difference in working area would be only a fraction of the total effective working area of the first diaphragm 16 on which pressure acts from the air chamber 26, the pump modified in this way would have only a marginally reduced maximum output pressure. There would be no change in the efficiency of the pump.

Referring to Figure 3, there is shown a combination of two pumps according to Figure 1, sharing the same air control valve 32. In this embodiment, the further air chambers 28 of the two pumps are both supplied at all times with compressed air from the air supply line 38 and the air control valve 32 applies the same compressed air alternately to the two air chambers 26. In each case, when an air chamber 26 of one of the pumps is being supplied with compressed air from the air control valve 32, the air chamber 26 of the other pump is opened to exhaust. The result is a double

BUREAU OMPI WIPO INTERNATION

acting pump assembly, which delivers fluid at a substantially constant output pressure without the pulsating action of a single acting pump.

BUREAU OMPI WIPO INTERNATIONAL

CLAIMS

1. A positive displacement diaphragm pump having an air chamber, a pumping chamber for fluid to be pumped, and a composite diaphragm between the air chamber and the pumping chamber, characterised in that the composite diaphragm comprises a first membrane communicating with the air chamber, a second membrane of smaller area than the first communicating with the pumping chamber, and a further air chamber between, and defined by, the first and second membranes, and means is provided for alternately supplying compressed air to the air chamber to effect a pumping stroke of the composite diaphragm and exhausting the air chamber while supplying compressed air to the further air chamber to effect a return stroke of the composite diaphragm.

2. A pump according to claim 1 wherein the first and second membranes of the composite diaphragm are linked at their mid-points by a connecting member so as to be capable of movement only in unison.

3. A pump according to claim 2, wherein each of the first and second membranes is provided with a centre plate, and the connecting member serves as a backing plate for each of the centre plates so that each of the first and second membranes is secured between its centre plate and the connecting member.

4. A pump according to claim 1 wherein the first and

BUREAU OMPI WIPO INTERNATION

second membranes are joined over the whole of their facing surfaces by a non-cellular porous spongy material that is air-permeable and bonds the membranes to one another to move only in unison.

5. A pump according to claim 1, wherein the first membrane is a rubberized asbestos or rubberized canvas diaphragm.

6. A pump according to claim 1 or claim 5, wherein the second membrane is a diaphragm made from a Viton (Trade Mark), neoprene, polyurethane, butyl or nitrile rubber.

7. A pump according to claim 1, wherein the means for controlling the air supply to the air chamber and to the further air chamber is a spool or shuttle valve.

8. A pump according to claim 7, wherein the valve is controlled by a probe extending into the air chamber and responsive to the position of the composite diaphragm.

9. A pump according to claim 7, wherein the valve is controlled by air logic, utilizing small changes in the air pressure at a pilot pressure port to determine when the composite diaphragm is at the ends of its stroke.

10. A pump according to claim 7, wherein the valve is controlled according to a time sequence.

BUREAU OMPI WIPO INTERNATIONAL

11. A pump according to claim 7, wherein the valve is controlled in response to an operator's actions.

12. A pump according to claim 1 or claim 7, wherein the means for controlling the air supply to the air chamber is effective to maintain a constant supply of compressed air to the further air chamber while alternately supplying compressed air to and exhausting the air chamber.

13. A double-acting pump assembly comprising a pair of pumps according to claim 1, wherein the means for alternately supplying compressed air to the air chambers and exhausting the air chambers while supplying compressed air to the further air chambers comprises a single air valve effective to cause the two composite diaphragms to produce their pumping strokes alternately.

14. A positive displacement diaphragm pump comprising:

a housing;

a composite diaphragm across the housing, the composite diaphragm comprising a first membrane and a second membrane;

a pumping chamber for fluid to be pumped, defined between the housing and the second membrane of the composite diaphragm;

an air chamber within the housing defined by the first membrane and the housing;

a further air chamber between, and defined by, the

BUREAU OMPI WIPO INTERNATION

first and second membranes, the second membrane being of smaller area than the first; and

valve means for supplying compressed air to the air chamber to effect a pumping stroke of the composite diaphragm, and for exhausting the air chamber while supplying compressed air to the further air chamber to effect a return stroke of the composite diaphragm.

15. A positive displacement diaphragm pump comprising;

a housing;

first and second diaphragms within the housing and defining, with the housing, a first air chamber, a second air chamber, and a pumping chamber for fluid to be pumped;

the first diaphragm presenting, to the second air chamber, a larger effective area than the second diaphragm ;

means connecting the first and second diaphragms to move only in unison;

a compressed air source;

air valve means having first and second modes of actuation, of which the first mode is effective to connect the compressed air source to the first air chamber to urge the first and second diaphragms for movement in unison to a limiting position in which the volume of the pumping chamber is reduced, and the second mode is effective to exhaust the first air chamber and connect the source

BUREAU OMPI WIPO INTERNATIONAL

of compressed air to the second air chamber to urge the first and second diaphragms in unison in the opposite direction to a limiting position in which the volume of the pumping chamber is at a maximum; and

means for controlling the actuation of the air valve means alternately between the first and second modes.

16. A positive displacement diaphragm pump comprising:

first and second housing shells defining a housing;

a composite diaphragm sandwiched between the housing shells and dividing the housing into a working chamber and a pumping chamber;

an air inlet into the working chamber for alternately pressurizing and exhausting the working chamber;

a fluid inlet into the pressure chamber for admitting fluid to be pumped;

a one-way valve in the fluid inlet;

a fluid outlet from the pressure chamber for delivering pumped fluid therefrom;

a one-way valve in the fluid outlet;

the composite diaphragm comprising a pair of membranes connected together to move only in unison and defining an air chamber therebetween, the working areas of the membranes being such that a higher pressure in the air chamber than in the working chamber urges the composite diaphragm to move in a direction to reduce the volume of the working chamber; and

an air inlet into the air chamber for pressurizing the air chamber.

BUREAU OMPI WIPO INTERNATION

17. A double-acting positive displacement diaphragm pump comprising:

a first housing means;

first and second diaphragms within the first housing means defining a first working fluid chamber between the first diaphragm and the first housing means, a second working fluid chamber between the first and second diaphragms and a first pumping chamber between the second diaphragm and the first housing means;

means interconnecting the first and second diaphragms and permitting them to move only in unison;

a second housing means;

third and fourth diaphragms within the second housing means defining a third working fluid chamber between the third diaphragm and the second housing means, a fourth working fluid chamber between the third and fourth diaphragms and a second pumping chamber between the fourth diaphragm and the second housing means;

means interconnecting the third and fourth diaphragms and permitting them to move only in unison;

a fluid pressure source;

valve means for alternately connecting the first and third working fluid chambers to the fluid pressure source and for exhausting each of the first and third working fluid chambers when the other is so connected;

a first input conduit to the first pumping chamber;

a first output conduit from the the first pumping chamber;

a second input conduit to the second pumping chamber;

a second output conduit from the second pumping

BUREAU OMPI WIPO INTERNATIONAL

chamber; and

one-way valve means in the input and output conduits for permitting fluid to flow into the pumping chambers only through the input conduits and from the pumping chambers only through the output conduits.

18. A pump according to claim 17, wherein the first diaphragm is of greater area than the second and the third diaphragm is of greater area than the fourth.

19. A pump according to claim 18, further comprising means connecting each of the second and fourth working fluid chambers to the fluid pressure source.

20. A pump according to any of claims 17 to 19, wherein the first and second outlet conduits lead to a common delivery conduit for pumped fluid.

BUREAU OMPI WIPO INTERNATIONAL

AMENDED CLAIMS
(received by the International Bureau on 28 February 1979 (28.02.79))

1. A positive displacement diaphragm pump having an air chamber, a pumping chamber for fluid to be pumped, and a composite diaphragm between the air chamber and the pumping chamber, characterised in that the composite diaphragm comprises a first cupped membrane of a rubber or rubber-containing material communicating with the air chamber, a second cupped membrane of a rubber or rubber--containing material of smaller area than the first communicating with the pumping chamber, and a further air chamber between, and defined by, the first and second membranes, and means is provided for alternately supplying compressed air to the air chamber to effect a pumping stroke of the composite diaphragm and exhausting the air chamber while supplying compressed air to the further air chamber to effect a return stroke of the composite diaphragm.

2. A pump according to claim 1 wherein the first and second membranes of the composite diaphragm are linked at their mid-points by a connecting member so as to be capable of movement only in unison.

3. A pump according to claim 2, wherein each of the first and second membranes is provided with a centre plate, and the connecting member serves as a backing plate for each of the centre plates so that each of the first and second membranes is secured between its centre plate and the connecting member.

4. A pump according to claim 1 wherein the first and

BUREAU OMPI WIPO INTERNATIONAL

11. A pump according to claim 7, wherein the valve is controlled in response to an operator's actions.

12. A pump according to claim 1 or claim 7, wherein the means for controlling the air supply to the air chamber is effective to maintain a constant supply of compressed air to the further air chamber while alternately supplying compressed air to and exhausting the air chamber.

13. A double-acting pump assembly comprising a pair of pumps according to claim 1, wherein the means for alternately supplying compressed air to the air chambers and exhausting the air chambers while supplying compressed air to the further air chambers comprises a single air valve effective to cause the two composite diaphragms to produce their pumping strokes alternately.

14. A positive displacement diaphragm pump comprising:

a housing;

a composite diaphragm across the housing, the composite diaphragm comprising a first cupped membrane and a second cupped membrane both made of rubber or a rubber-containing material;

a pumping chamber for fluid to be pumped, defined between the housing and the second membrane of the composite diaphragm;

an air chamber within the housing defined by the first membrane and the housing;

a further air chamber between, and defined by, the

BUREAU OMPI WIPO INTERNATION

first and second membranes, the second membrane being of smaller area than the first; and

valve means for supplying compressed air to the air chamber to effect a pumping stroke of the composite diaphragm, and for exhausting the air chamber while supplying compressed air to the further air chamber to effect a return stroke of the composite diaphragm.

15. A positive displacement diaphragm pump comprising:

a housing;

first and second cupped diaphragms within the housing each made of rubber or a rubber-containing material and defining, with the housing, a first air chamber, a second air chamber, and a pumping chamber for fluid to be pumped;

the first diaphragm presenting, to the second air chamber, a larger effective area than the second diaphragm;

means connecting the first and second diaphragms to move only in unison;

a compressed air source;

air valve means having first and second modes of actuation, of which the first mode is effective to connect the compressed air source to the first air chamber to urge the first and second diaphragms for movement in unison to a limiting position in which the volume of the pumping chamber is reduced, and the second mode is effective to exhaust the first air chamber and connect the source of compressed air to the second air chamber to urge the first and second diaphragms in unison in the

BUREAU OMPI WIPO INTERNATIONAL

opposite direction to a limiting position in which the volume of the pumping chamber is at a maximum; and

means for controlling the actuation of the air valve means alternately between the first and second modes.

16. A positive displacement diaphragm pump comprising:

first and second housing shells defining a housing;

a composite diaphragm sandwiched between the housing shells and dividing the housing into a working chamber and a pumping chamber;

an air inlet into the working chamber for alternately pressurizing and exhausting the working chamber;

a fluid inlet into the pressure chamber for admitting fluid to be pumped;

a one-way valve in the fluid inlet;

a fluid outlet from the pressure chamber for delivering pumped fluid therefrom;

a one-way valve in the fluid outlet;

the composite diaphragm comprising a pair of cupped membranes each made of rubber or a rubber-containing material connected together to move only in unison and defining an air chamber therebetween, the working areas of the membranes being such that a higher pressure in the air chamber than in the working chamber urges the composite diaphragm to move in a direction to reduce the volume of the working chamber; and

an air inlet into the air chamber for pressurizing the air chamber.

BUREAU OMPI WIPO INTERNATIONAL

17. A double-acting positive displacement diaphragm pump comprising;

a first housing means;

first and second cupped diaphragms within the first housing means, each made of rubber or a rubber-containing material and defining a first working fluid chamber between the first diaphragm and the first housing means, a second working fluid chamber between the first and second diaphragms and a first pumping chamber between the second diaphragm and the first housing means;

means interconnecting the first and second diaphragms and permitting them to move only in unison;

a second housing means;

third and fourth diaphragms within the second housing means defining a third working fluid chamber between the third diaphragm and the second housing means, a fourth working fluid chamber between the third and fourth diaphragms and a second pumping chamber between the fourth diaphragm and the second housing means;

means interconnecting the third and fourth diaphragms and permitting them to move only in unison;

a fluid pressure source;

valve means for alternately connecting the first and third working fluid chambers to the fluid pressure source and for exhausting each of the first and third working fluid chambers when the other is so connected;

a first input conduit to the first pumping chamber;

a first output conduit from the first pumping chamber;

a second input conduit to the second pumping chamber;

a second output conduit from the second pumping chamber; and

BUREAU OMPI WIPO INTERNATIONAL

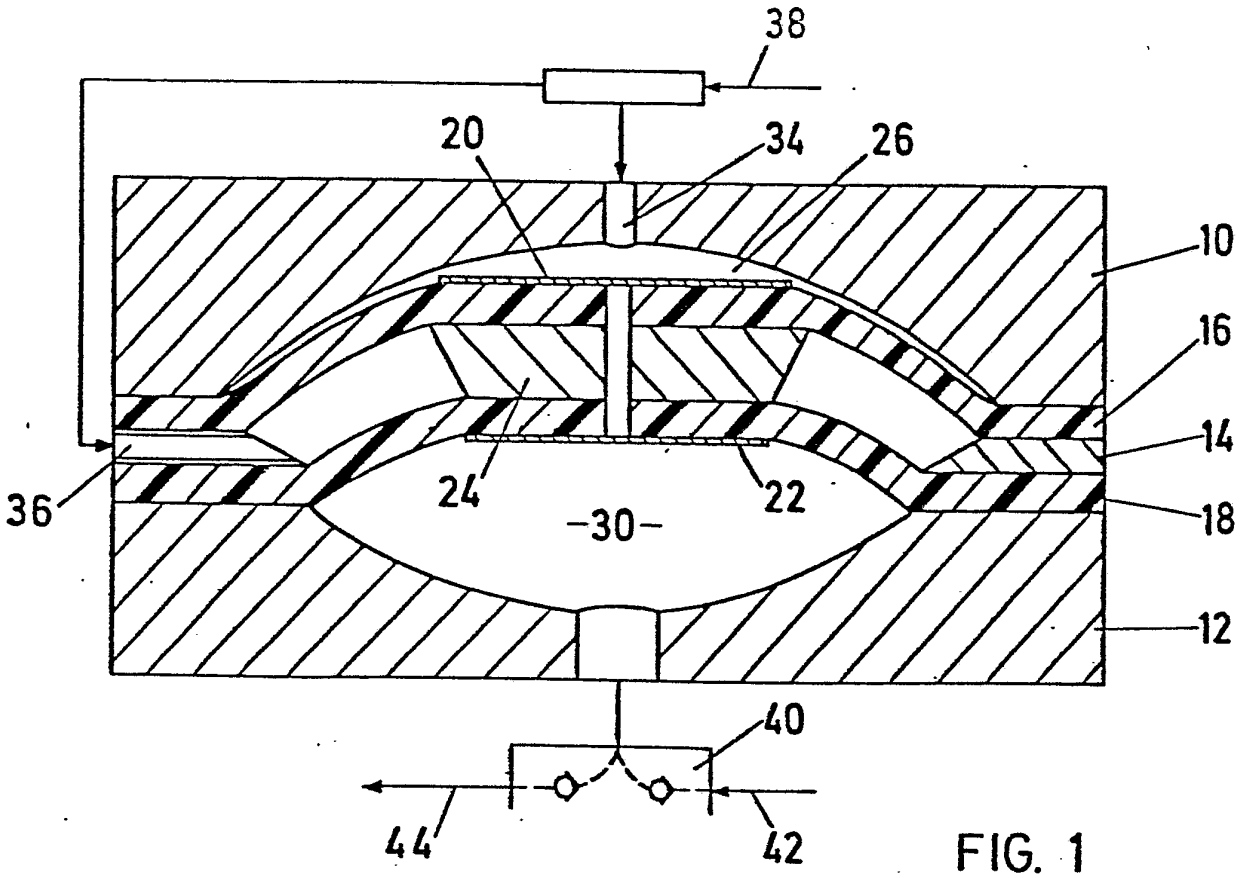

FIG. 1

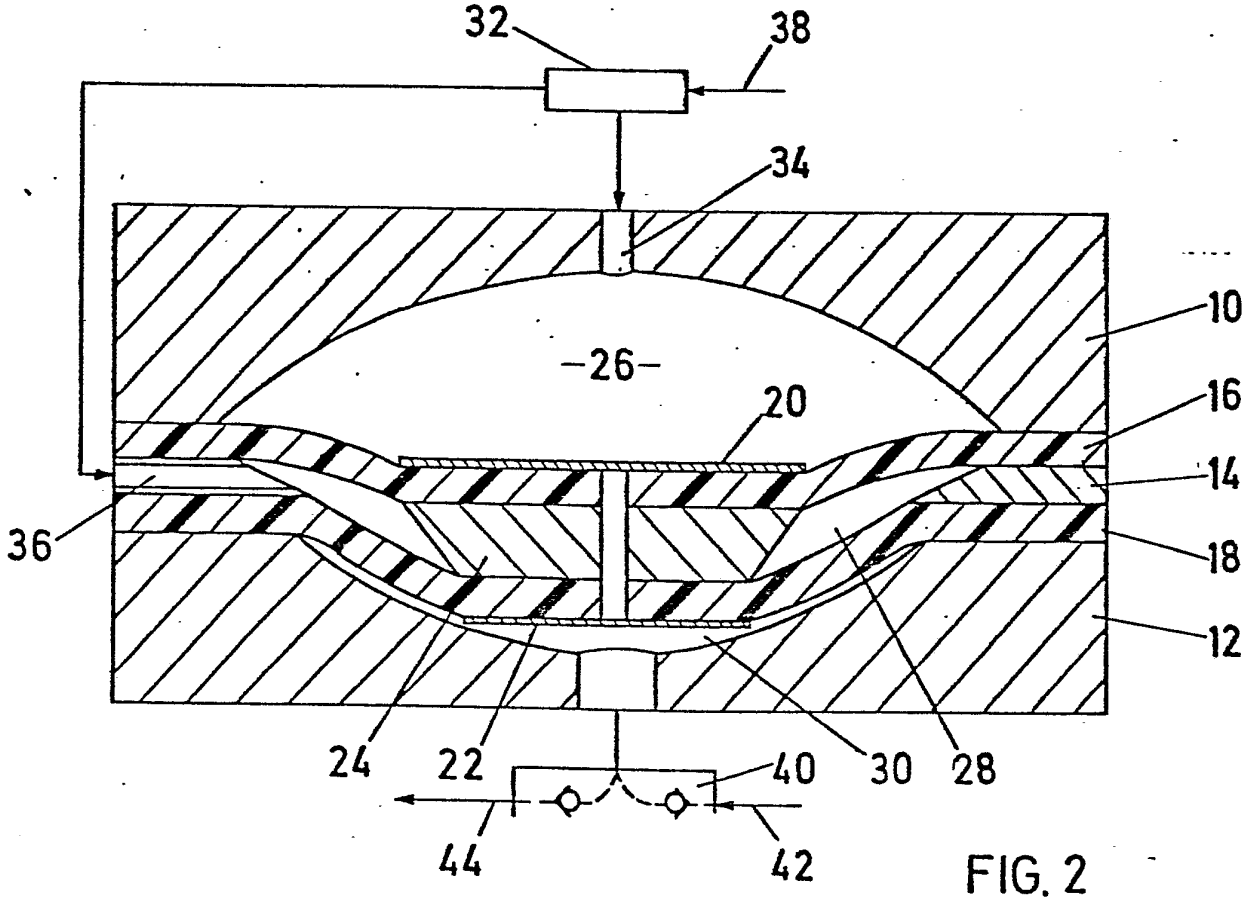

FIG. 2

BUREAU OMPI WIPO INTERNATIONAL

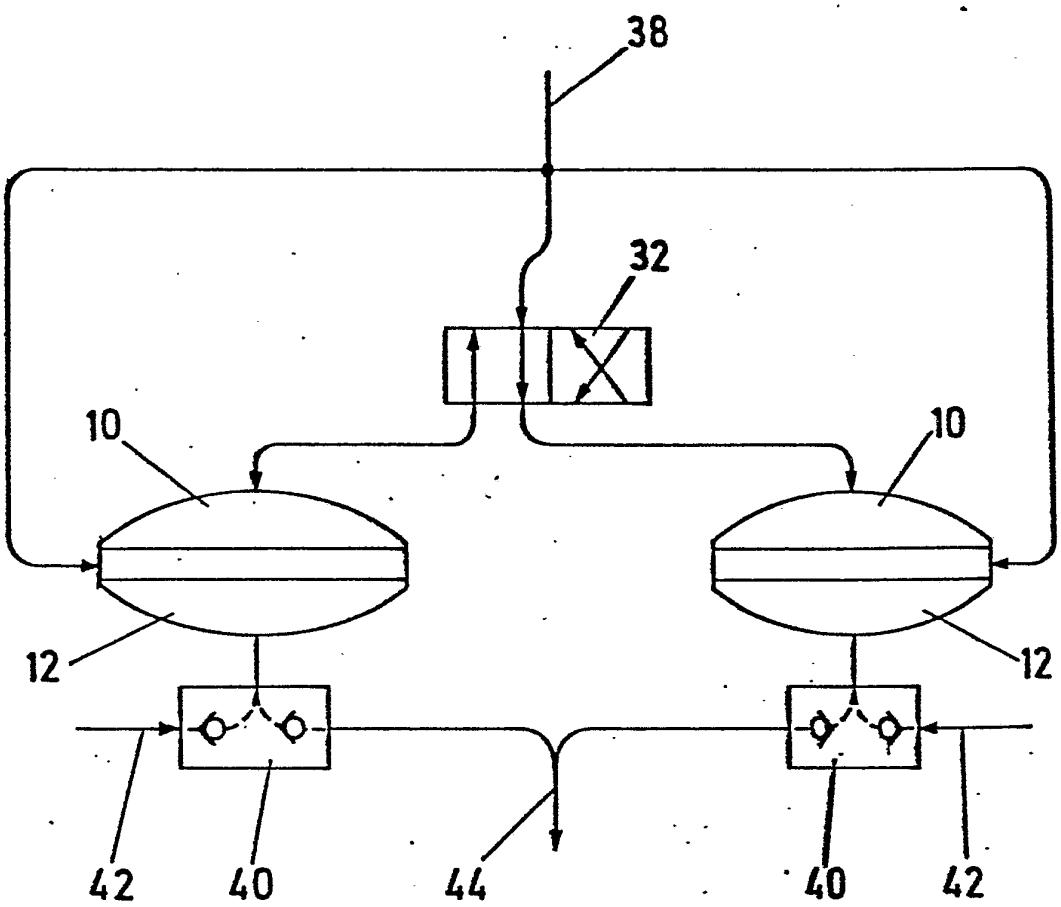

FIG. 3

BUREAU OMPI WIPO INTERNATIONAL

INTERNATIONAL SEARCH REPORT

International Application No PCT/GB 78/00021

I. CLASSIFICATION OF SUBJECT MATTER (if several classification symbols apply, indicate all) [3]

According to International Patent Classification (IPC) or to both National Classification and IPC

F 04 B 43/06; F 04 B 9/12; F 01 L 23/00; F 01 L 25/04

II. FIELDS SEARCHED

Minimum Documentation Searched [4]

Classification System	Classification Symbols
Int.Cl.[2]	F 04 B 43/00; F 04 B 43/06; F 04 B 43/10; F 01 L 25/04

Documentation Searched other than Minimum Documentation to the Extent that such Documents are Included in the Fields Searched [5]

III. DOCUMENTS CONSIDERED TO BE RELEVANT [14]

Category *	Citation of Document, [16] with indication, where appropriate, of the relevant passages [17]	Relevant to Claim No. [18]
X	GB, A, 1112507, published 1968, May 8 (IMPERIAL CHEMICAL INDUSTRIES OF AUSTRALIA AND NEW ZEALAND) --	1-3,7,8,12, 14-16
X	FR, A, 2177181, published 1973, November 2, see figures 5 and 7; page 16, line 13 to page 18, line 7; page 19, line 19 to page 21, line 30 (S.K.M.) --	1-3,7,8,12-14, 16-20
	US, A, 2391703, published 1945, December 25, see figure 1 and claim 1 (HUGHES) --	1-3,10,12,14, 16
	US, A, 2675758, published 1954, April 20, see figure 6; column 4, lines 35-44; column 7, lines 52-57 (HUGHES) --	5,6
	US, A, 2323950, published 1943, July 13, see figures 2 and 4; page 2, left-hand column, lines 42-47; page 3, right-hand column, lines 12-14 (WADE) -- ./..	5,6

* Special categories of cited documents: [15]

"A" document defining the general state of the art

"E" earlier document but published on or after the international filing date

"L" document cited for special reason other than those referred to in the other categories

"O" document referring to an oral disclosure, use, exhibition or other means

"P" document published prior to the international filing date but on or after the priority date claimed

"T" later document published on or after the international filing date or priority date and not in conflict with the application, but cited to understand the principle or theory underlying the invention

"X" document of particular relevance

IV. CERTIFICATION

Date of the Actual Completion of the International Search [1]	Date of Mailing of this International Search Report [2]
22nd November 1978	29th November 1978
International Searching Authority [1]	**Signature of Authorized Officer [20]**
European Patent Office	

FURTHER INFORMATION CONTINUED FROM THE SECOND SHEET

	US, A, 2869474, published 1959, January 20, see figures 5 and 6; column 3, line 65 to column 4, line 2 (PLEUGER)	5,6
	--	
	FR, A, 1207196, published 1960, February 15, see figure, membranes 7 and 13 (POMPES NOEL)	5,6
	--	
	FR, E, 93124, published 1969, February 14, see page 2, left-hand column, 11th paragraph (ETUDES ET REALISATIONS D'AUTOMATISMES)	6
	--	
	./..	

V. ☐ OBSERVATIONS WHERE CERTAIN CLAIMS WERE FOUND UNSEARCHABLE [10]

This international search report has not been established in respect of certain claims under Article 17(2) (a) for the following reasons:

1. ☐ Claim numbers....., because they relate to subject matter [12] not required to be searched by this Authority, namely:

2. ☐ Claim numbers....., because they relate to parts of the international application that do not comply with the prescribed requirements to such an extent that no meaningful international search can be carried out [13], specifically:

VI. ☐ OBSERVATIONS WHERE UNITY OF INVENTION IS LACKING [11]

This International Searching Authority found multiple inventions in this international application as follows:

1. ☐ As all required additional search fees were timely paid by the applicant, this international search report covers all searchable claims of the international application.

2. ☐ As only some of the required additional search fees were timely paid by the applicant, this international search report covers only those claims of the international application for which fees were paid, specifically claims:

3. ☐ No required additional search fees were timely paid by the applicant. Consequently, this international search report is restricted to the invention first mentioned in the claims; it is covered by claim numbers:

Remark on Protest

☐ The additional search fees were accompanied by applicant's protest.

☐ No protest accompanied the payment of additional search fees.

FURTHER INFORMATION CONTINUED FROM THE SECOND SHEET

DE, A, 1811937, published 1969, October 16 (MANTON) --	9
DE, A, 1962151, published 1971, June 24 (EISELE) --	9
GB, A, 1234921, published 1971, June 9, see page 3, lines 5-11 (BAGGALEY) ----	6,10,1,2

V. ☐ OBSERVATIONS WHERE CERTAIN CLAIMS WERE FOUND UNSEARCHABLE [10]

This international search report has not been established in respect of certain claims under Article 17(2) (a) for the following reasons:

1. ☐ Claim numbers _____, because they relate to subject matter [12] not required to be searched by this Authority, namely:

2. ☐ Claim numbers _____, because they relate to parts of the international application that do not comply with the prescribed requirements to such an extent that no meaningful international search can be carried out [13], specifically:

VI. ☐ OBSERVATIONS WHERE UNITY OF INVENTION IS LACKING [11]

This International Searching Authority found multiple inventions in this international application as follows:

1. ☐ As all required additional search fees were timely paid by the applicant, this international search report covers all searchable claims of the international application.

2. ☐ As only some of the required additional search fees were timely paid by the applicant, this international search report covers only those claims of the international application for which fees were paid, specifically claims:

3. ☐ No required additional search fees were timely paid by the applicant. Consequently, this international search report is restricted to the invention first mentioned in the claims; it is covered by claim numbers:

Remark on Protest

☐ The additional search fees were accompanied by applicant's protest.

☐ No protest accompanied the payment of additional search fees.