A. L. SOHM.

WORKMAN'S TIME RECORDER.

APPLICATION FILED JULY 27, 1917.

1,304,618.

Patented May 27, 1919.

2 SHEETS—SHEET 1.

Fig. 1

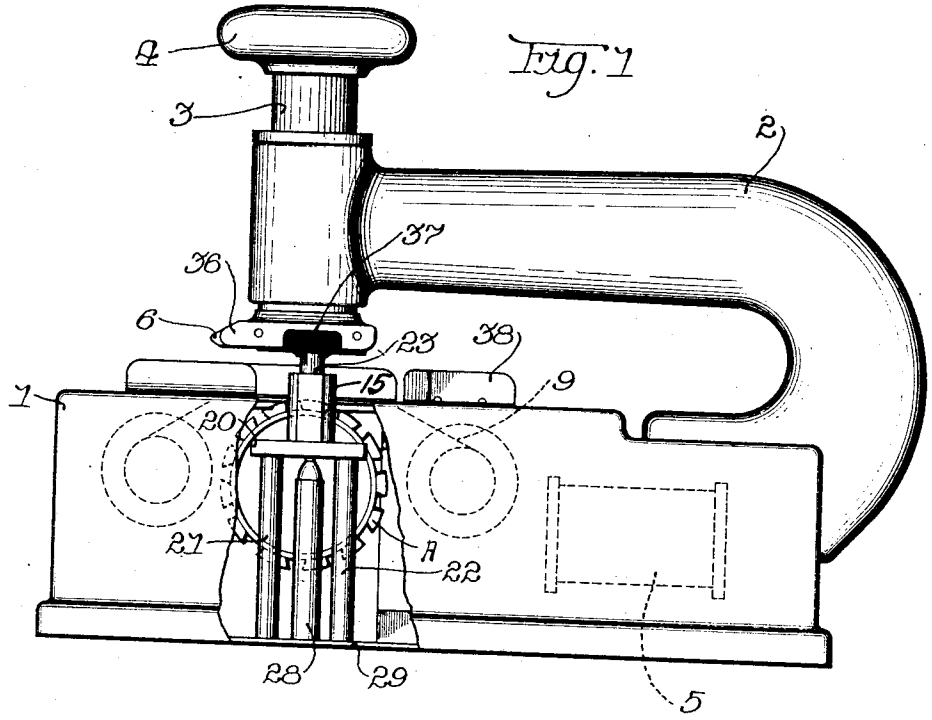

Fig. 2

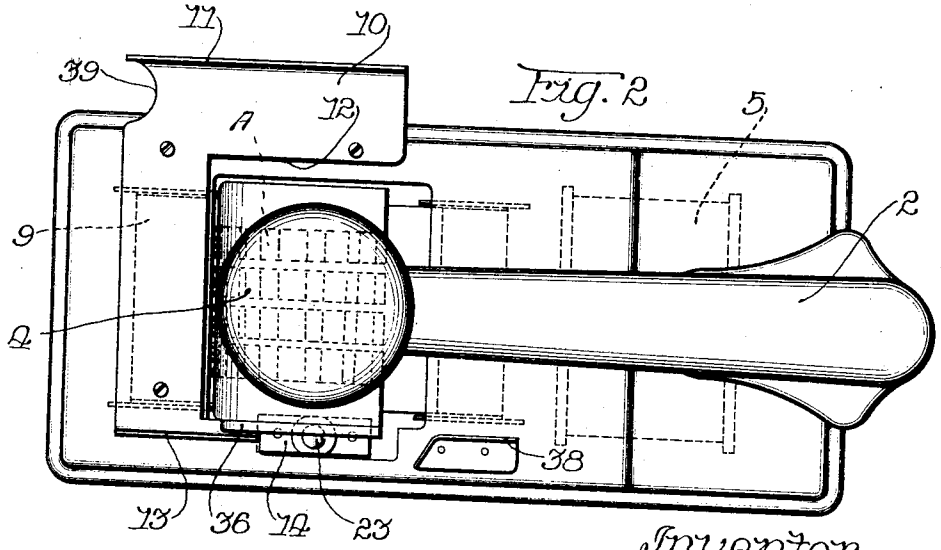

Inventor
Alfred L. Sohm
By Brown, Hanson & Battelle
Attorneys

THE NORRIS PETERS CO., PHOTO-LITHO., WASHINGTON, D. C.

A. L. SOHM.

WORKMAN'S TIME RECORDER.

APPLICATION FILED JULY 27, 1917.

1,304,618.

Patented May 27, 1919.

2 SHEETS—SHEET 2.

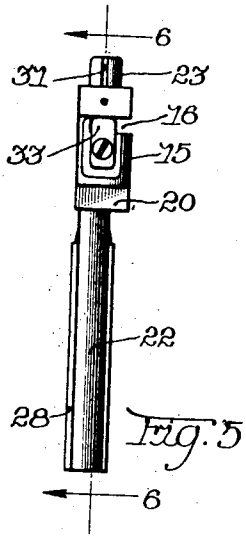

Fig. 5

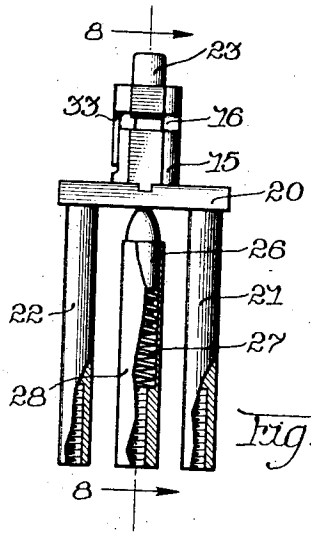

Fig. 7

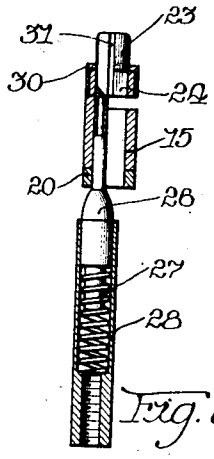

Fig. 8

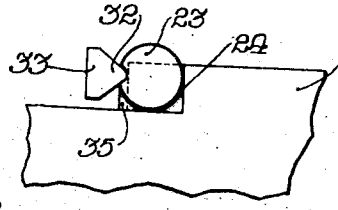

Fig. 10

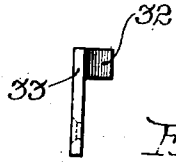

Fig. 9

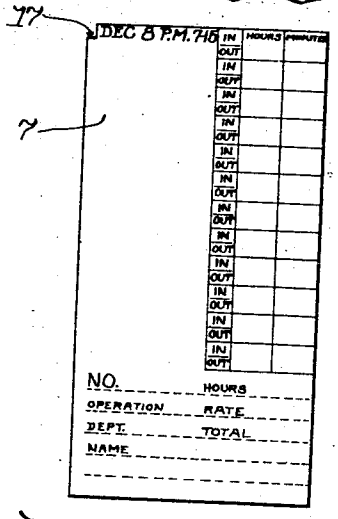

Fig. 3

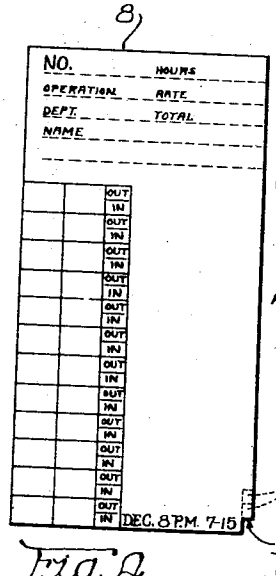

Fig. 4

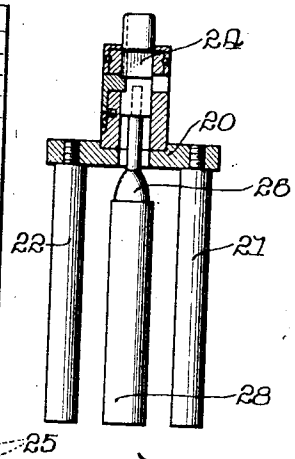

Fig. 6

Inventor
Alfred L. Sohm
By Brown, Hanson & Battcher
Attorneys

UNITED STATES PATENT OFFICE.

ALFRED L. SOHM, OF CHICAGO, ILLINOIS, ASSIGNOR TO SOHM ELECTRIC COMPANY, OF CHICAGO, ILLINOIS, A CORPORATION OF ILLINOIS.

WORKMAN'S TIME-RECORDER.

1,304,618. Specification of Letters Patent. Patented May 27, 1919.

Application filed July 27, 1917. Serial No. 183,085.

To all whom it may concern:

Be it known that I, ALFRED L. SOHM, a citizen of the United States, residing at Chicago, in the county of Cook and State of Illinois, have invented a certain new and useful Improvement in Workmen's Time-Recorders, of which the following is a full, clear, concise, and exact description, reference being had to the accompanying drawings, forming a part of this specification.

My invention relates to workmen's time recorders and relates particularly to that class of recorders employing a workman's time card for each individual workman.

To make the individual in-and-out records correctly requires proper spacing of these entries upon the card in order to make it possible to readily compute the time for which the workman is to be paid.

My invention aims to provide a simple, convenient time stamp adapted to receive the workman's card and to make the proper entries thereupon.

My invention aims further to provide improved means for guiding the cards and spacing the individual entries upon the cards. And a further aim of my invention is to provide an improved stop and clipper for clipping the edge of the card.

I shall now describe an embodiment of my invention.

In the accompanying drawings which form a part of this specification—

Figure 1 is a side elevation with parts broken away of a time stamp embodying my invention;

Fig. 2 is a plan view of the same;

Figs. 3 and 4 are illustrations of the type of card employed in the device of Figs. 1 and 2;

Fig. 5 is an end elevation of the clipping device showing the top;

Fig. 6 is a longitudinal cross section taken on the line 6—6 of Fig. 5;

Fig. 7 is a front elevation of the clipping device showing the stop;

Fig. 8 is a longitudinal cross section taken on the line 8—8 of Fig. 7;

Fig. 9 is a detail elevation of the stop device; and Fig. 10 is a fragmentary plan view showing the relation between the stop member, the card and the cutting shoulder.

The time recorder shown in Figs. 1 and 2 comprises a generally rectangular base 1 having an overhanging arm 2 which guides a plunger 3 for reciprocation by means of the handle 4 and a spring, not shown, over a set of type and number wheels A, which are housed in the base 1. These type and number wheels are time controlled, being advanced by means of an electromagnet 5, shown in dotted lines in Figs. 1 and 2.

After the card has passed the clipping device it is narrower than it was and I provide a guide strip 38 which is set closer to the guide 11 than the guide 13 by the amount the card is reduced in width by the clipping device. I have in effect a channel for guiding a card of original width and a narrower channel for guiding the narrow or cut end of the card.

This magnet is periodically energized to advance the time wheels which lie under the plunger 3. The plunger 3 bears a suitable striking pad 6 having a rubber face for striking the back of the card 7 or 8 shown in Figs. 3 and 4 against the time wheels. A suitable printing ribbon 9 shown in dotted lines in Figs. 1 and 2 is interposed between the impression wheels and the card.

The card is guided over the type wheels by means of a suitable guiding plate 10. This guiding plate has one edge bent upward as shown at 11 to form a guide along the edge farthest remote from the impression wheels.

The guiding plate 10 is cut out as is shown at 12 to make room for the engagement of the impression wheels with the time card. The other edge of the plate 10 is bent up as is shown at 13 to form a guide for the adjacent edge of the card.

The stop and clipping device 14 is located adjacent the type wheels at one edge of the card for stopping the card at the proper point and for clipping off the shoulder at each impression, said clipping or trimming device comprising a post 15 having a transverse slot 16 for receiving the edge of the card just in advance of the shoulders 17 or 18 (see Figs. 3 and 4).

The post 15 is supported upon a cross-bar 20 which is supported at its outer end by the pillars or posts 21 and 22.

The post 15 is hollow and is provided with a cutting plunger 23 which has a square cutting shoulder 24 for cutting out small rectangular sections from the edge of the card, as shown at 25 in Fig. 4, for advancing the shoulders 17 or 18, as the case may be.

The cutting or clipping plunger 23 is normally held in raised position by means of the pin 26 which is pressed upward by the spring 27 lying in the barrel 28. The barrel 28 and the posts 21 and 22 are secured to the base or bottom 29 of the frame of the device. The post 15 is provided with a small annular ring or cap 30 which limits the upward movement of the plunger 23. The plunger 23 is provided with a groove 31 within which lies the forward edge or nose 32 of the stop 33. The stop 33 lies in the path of the shoulder 17 or 18 and the nose 32 engages this shoulder, holding the card against further insertion in the guides 10, 11, 13.

Fig. 10 illustrates the relative position of the cutting shoulders 24, the card 7 and the nose 32 of the stop member 33. It will be noted that the rear edge 35 of the cutter 24 extends back of the front edge of the nose 32. This means that the small rectangular clipping will be completely cut off at each stroke because of the overlapping cutting edge. As shown in Figs. 1 and 2, the plunger 23 extends upward at the side of the slot 6 and is adapted to be engaged by the trip or extension 36 which is attached at the adjacent edge of the platen. The strip 36 is recessed as shown at 37 in order to cause engagement with the plunger 23 substantially at the same time that the pad or platen 6 engages the card.

The card 7 has the earlier date of the stamp at the top progressing in accordance with the time entries.

The card No. 8 has these entries advancing from the bottom of the card upward so that subtraction is made easier. Either form of card or any preferred form may be employed.

It is apparent that the details of the mechanism that I have shown may be varied without departing from the invention.

I claim:

1. In combination, a guide comprising an outer channel, and a narrow inner channel, the outer channel being adapted to receive a card at its full width, a stop stationary at the junction of the channels and a clipping punch movable up and down immediately in advance of the stop for clipping or trimming the edge of the card to permit it to enter farther into the inner channel, the punch having a guide groove in its rear side receiving the forward edge of the stop.

2. A clipper comprising a post having a transverse slot for receiving the edge of a card, a sliding plunger in said post, said plunger having a clipping edge coöperating with said slot, a spring plunger engaging the sliding plunger to yieldingly hold same at the upper limit of its movement, and a stop member secured to the post across said transverse slot, said clipping plunger having a longitudinal groove for receiving the forward edge of the stop member.

3. In combination, a base adapted to support time controlled printing mechanism and an overhanging arm secured to the base, a plunger mounted for vertical longitudinal movement in said overhanging arm and vertically in line with the impression device, a platen device secured to the lower end of said plunger, a guiding and clipping device comprising a flat plate having an upturned edge at each side forming a channel of the width of the card for guiding the card at its full width, a post having a transverse slot therein, said slot being in line with the adjacent edge of the plate, a plunger in said post, said plunger having a cutting member adapted to clip off a substantially rectangular section from the edge of the card and a fixed stop for engaging the shoulder formed by clipping the section from the edge of the card, said stop arranged forward of the rear edge of said plunger, and said platen having a projecting portion for engaging the plunger.

In witness whereof I hereunto subscribe my name this 24th day of July, A. D. 1917.

ALFRED L. SOHM.

Copies of this patent may be obtained for five cents each, by addressing the "Commissioner of Patents, Washington, D. C."