A. L. PUCEL.

WARNING APPARATUS FOR THE PROTECTION OF VALUABLE OBJECTS.

APPLICATION FILED FEB. 12, 1913.

1,068,928. **Patented July 29, 1913.**

3 SHEETS—SHEET 1.

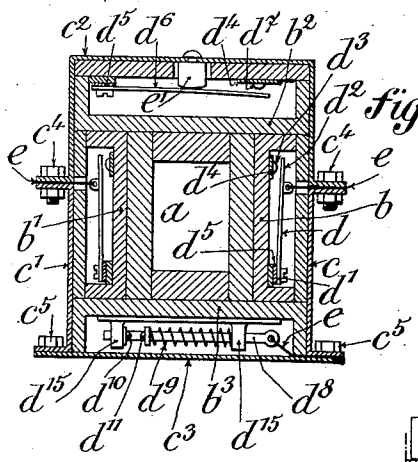

fig. 1.

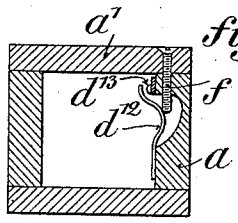

fig. 3.

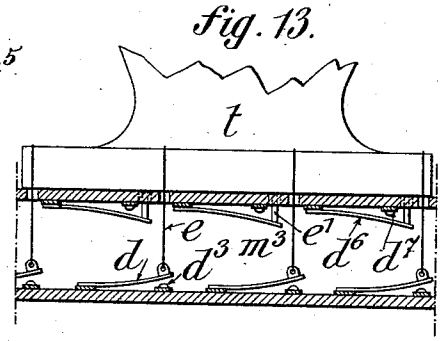

fig. 13.

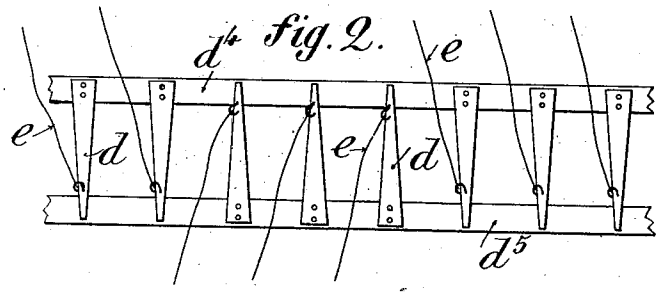

fig. 2.

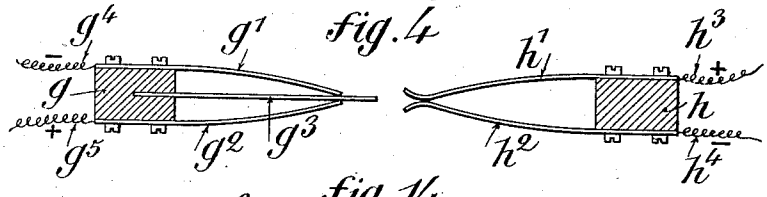

fig. 4

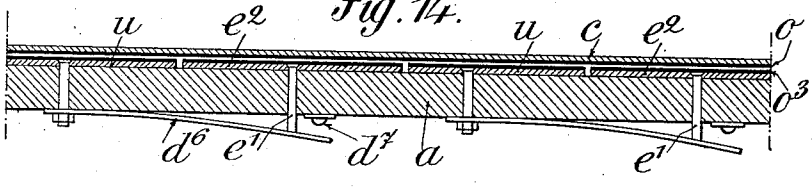

fig. 14.

Witnesses
A. VanLoock
L. B. James

Inventor
Auguste Léon Pucel
By H. A. Wilkinson & Co
Attorneys

COLUMBIA PLANOGRAPH CO., WASHINGTON, D. C.

A. L. PUCEL.

WARNING APPARATUS FOR THE PROTECTION OF VALUABLE OBJECTS.

APPLICATION FILED FEB. 12, 1913.

1,068,928.

Patented July 29, 1913.

3 SHEETS—SHEET 2.

Fig. 5.

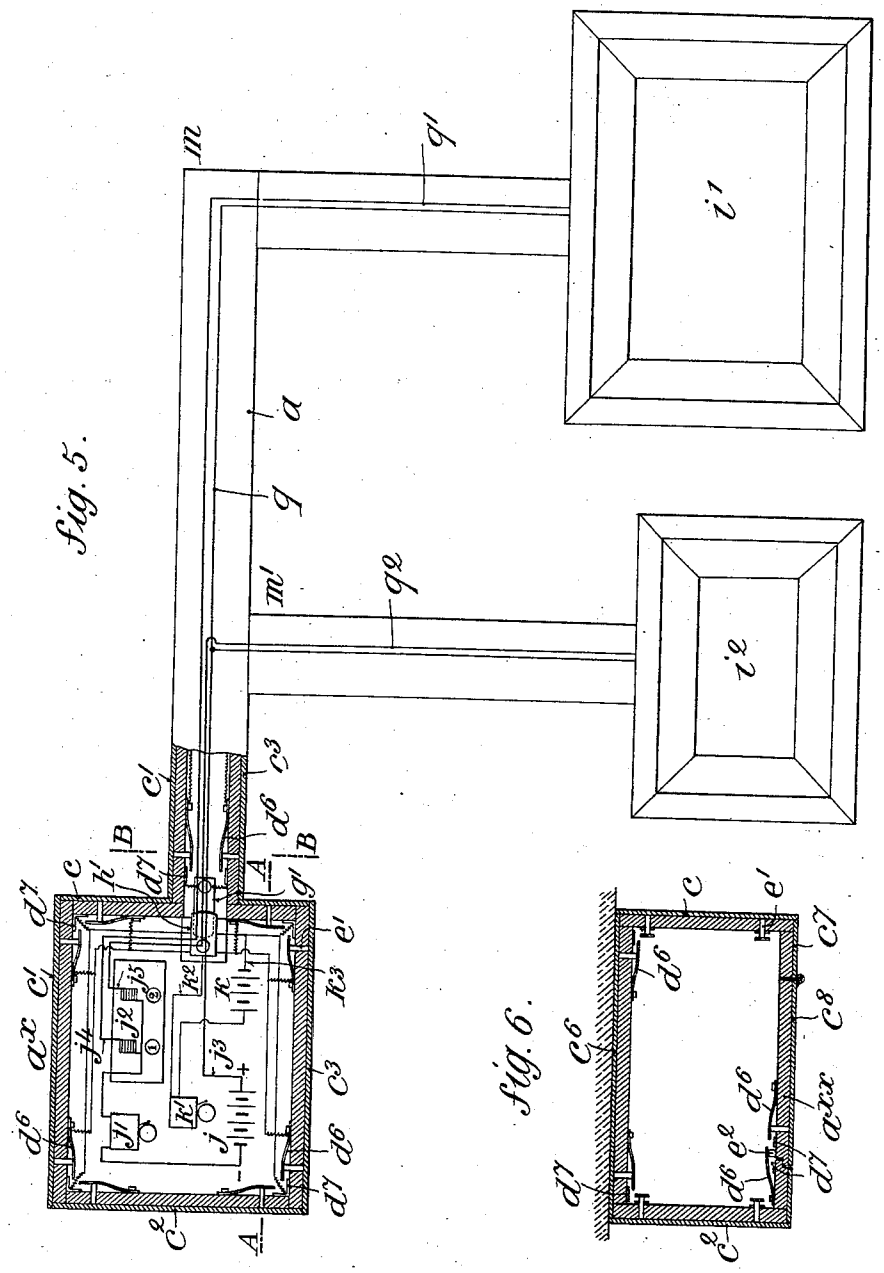

Fig. 6.

Witnesses
A. Van Loock
L. B. James

Inventor
Auguste Léon Pucel
By A. B. Wilson & Co
Attorneys.

COLUMBIA PLANOGRAPH CO., WASHINGTON, D. C.

A. L. PUCEL.

WARNING APPARATUS FOR THE PROTECTION OF VALUABLE OBJECTS.

APPLICATION FILED FEB. 12, 1913.

1,068,928. Patented July 29, 1913.

3 SHEETS—SHEET 3.

fig. 7.

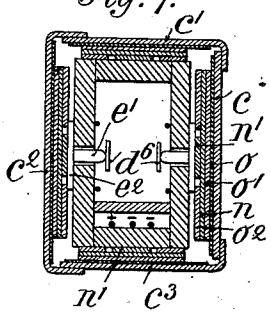

fig. 8.

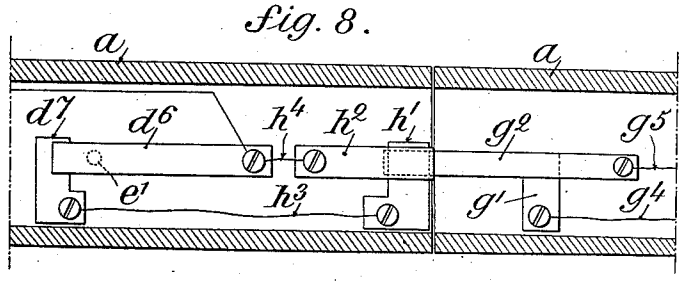

fig. 9.

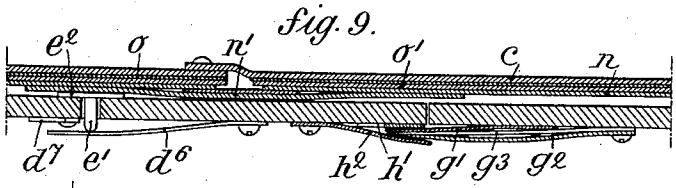

fig. 10.

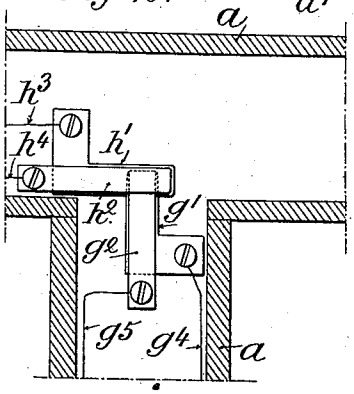

fig. 12.

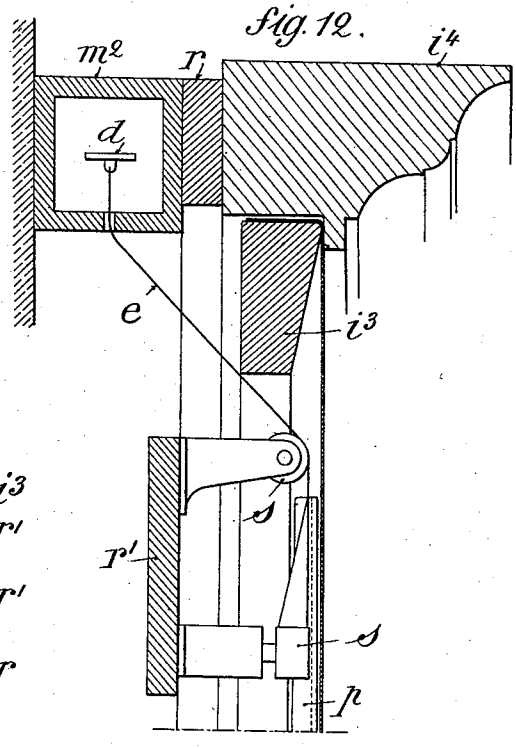

fig. 11.

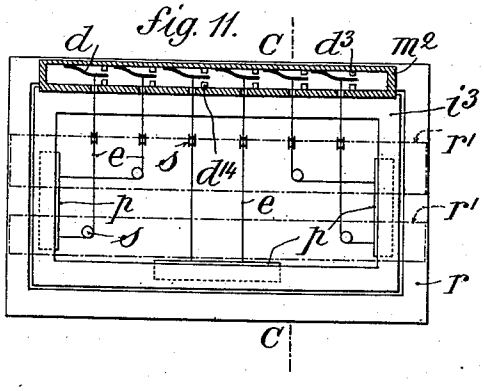

Witnesses
A. Van Loock
L. B. James

Inventor
Auguste Léon Pucel
By H. B. Willson & Co
Attorneys

COLUMBIA PLANOGRAPH CO., WASHINGTON, D. C.

UNITED STATES PATENT OFFICE.

AUGUSTE LÉON PUCEL, OF SCEAUX, FRANCE.

WARNING APPARATUS FOR THE PROTECTION OF VALUABLE OBJECTS.

1,068,928. Specification of Letters Patent. Patented July 29, 1913.

Application filed February 12, 1913. Serial No. 748,042.

To all whom it may concern:

Be it known that I, AUGUSTE LÉON PUCEL, a citizen of the Republic of France, residing at 58 Rue Voltaire, Sceaux, Seine, in the Republic of France, engineer, have invented certain new and useful Improvements in Warning Apparatus for the Protection of Valuable Objects, of which the following is a specification.

This invention relates to improvements in warning apparatus for the purpose of protecting valuable objects, such as pictures, strong-boxes and the like, by giving an alarm signal as soon as an attempt is made to remove, perforate or damage such objects.

The object of the invention is to provide means whereby to prevent the circuits necessary for connecting the divers valuable objects with the signaling device from being cut or rendered useless otherwise. To accomplish this it is indispensable that all the circuits, together with the batteries, the signaling device and all the connections shall be protected without any solution of continuity. For such purpose the said circuits are inclosed in a wrapper closed at every part and which comprises narrow parts in the shape of sheaths inclosing the conductors and enlarged parts in the shape of casings large enough to inclose the batteries, the signaling devices and the like, and such wrapper is encircled at every part by a metal jacket which acts on spring switches mounted in the said wrapper in such a manner that such jacket or even any part thereof cannot be removed without such switches operating and closing a signaling circuit.

Several embodiments of this invention are shown by way of examples in the accompanying drawings, in which:—

Figure 1 is a transversal section of a wrapper in the shape of a sheath with the metal jacket. Fig. 2 shows in elevation the details of such wrapper. Fig. 3 is a transversal section of a wrapper, showing a switch actuated by a connecting screw. Fig. 4 represents two current-taking devices adapted to engage each other. Fig. 5 is a diagram partly in section and partly in elevation of an apparatus so fitted as to protect two pictures. Fig. 6 is a horizontal section on the line A—A of Fig. 5, of a casing inclosing the batteries and the signaling devices. Fig. 7 is a cross section on the line B—B of Fig. 5, of a part of the wrapper. Fig. 8 is a fragmentary elevation of a wall of the said wrapper, seen from within. Fig. 9 is a fragmentary longitudinal section of such wall. Fig. 10 is a detail section of the wrapper at the point junction of a lateral branch. Fig. 11 shows partly in section and partly in elevation a picture, seen from the rear. Fig. 12 is a vertical section on the line C—C of Fig. 11. Fig. 13 is a detail section of a wrapper comprising two series of spring switches. Fig. 14 is a fragmentary longitudinal section of a modified wrapper.

In Figs. 1 and 2, a designates a wooden conduit designed to inclose the wires of the electric circuit to be protected. On the four faces of such conduit are secured, by screws or studs, hollow beads or boxes, b, b^1, b^2, b^3, which inclose the switches serving to protect the wrapper. These parts as a whole are surrounded by a metal casing composed of sheet iron plates c, c^1, c^2, c^3 assembled together by bolts c^4, c^5. The switches located in the beads b, b^1, b^2, b^3 may be of any suitable kind adapted to be held normally open as long as the metal casing remains closed, and to close automatically the corresponding circuits as soon as the parts of the casing are separated. Three kinds of switches are shown in Fig. 1. In the bead b the switch consists of a resilient blade d, one end d^1 of which is fixed and the other end d^2 tends to apply itself against a contact d^3, but is normally kept separated by a wire e attached at one end to the said blade and at the other end to one of the bolts c^4 of the casing; if the said bolt is unscrewed the wire is released and the blade d bears against the contact d^3, thus bringing in communication two conductor blades d^4 and d^5 which extend the whole length of the bead and which are connected respectively (see Fig. 2) with the two poles of a circuit comprising a battery and a signaling device, such as a ringing device or the like. The bead b^1 incloses switches similar to the previous ones. Within the bead b^2, the switch shown comprises also a blade d^6 and a contact d^7 connected respectively with the blades d^4, d^5, but the blade d is kept separated from the contact d^7 by a push button e^1 secured to the top c^2 of the metal casing, so that if the top is raised, the push button e^1 will allow the blade d^6 to rise and close

the circuit on the contact d^7. In the bead b^3 is located a switch comprising a rod d^8 slidable in the guides d^{15} and subjected to the action of a spring d^9; a wire e connects the said rod with one of the bolts c^5 of the casing so as to keep separate from one another the contacts d^{10}, d^{11} carried by the rod and one of the guides and connected continuously with the circuit of the signaling device. Any suitable number of switches may be placed on each side of the wrapper and they may be so near together as to render it almost impossible to insert a boring tool in the wrapper without encountering one of the switches; if all the blades d are connected with the same pole of the circuit and if the metal casing is in communication with the other pole the boring tool will then close the circuit in touching both the metal casing and one of the blades d, so that the attempt to bore will be signaled. For the same purpose, the inner wall of the parts of the metal casing may be lined with several coatings of conducting materials separated by layers of insulating materials, preferably in uniting intimately the said layers together and with the metal casing so that they cannot be separated and furthermore in making them very thin so that a tool boring the casing will not fail to reach one of the inner conducting coatings; the latter being connected with one pole of a circuit of a warning circuit and the metal casing with the other pole, the alarm will thus be given as soon as the tool has pierced the said casing.

More particularly, the sheet metal may be covered by an insulating varnish and such varnish may be baked up to between 200 and 300 degrees centigrade, and then a coating of metallic powder may be spread on the said varnish, a suitable binding material being added to such powder, the whole being baked again. There may be also applied on the varnish coating one or more thin metal sheets, of tin for instance, with the contingent intercalation of sheets of paper or of other insulating material, the whole being united by means of varnish or other binding material.

The wrapper a will generally be composed of pieces of wood assembled together by means of screws or studs to form sheaths, boxes or the like rectangular in cross section. There may be added to the above described protecting means, a supplementary protecting means consisting of switches placed within the wrapper and actuated direct by the said screws, studs or other fastening members, for instance as shown in Fig. 3, where the fastening screw f, uniting two walls a and a^1 of the wrapper, acts by its point against a resilient blade d^{12} to separate the same from a contact d^{13} when screwed home, such blade and such contact being secured to the wall a and connected with the two poles of a warning circuit. If an attempt is made to loosen the screw f, the blade d^{12} is released and comes and bears against the contact d^{13}, in closing the circuit.

The wrapper a will generally be of such a length as to require to be composed of several parts assembled end to end. It will then be suitable to insure the connection of the corresponding portions of the circuits inclosed in such parts by means of simple and safe connections. One embodiment of such connection is shown in Fig. 4, where an insulating support g, secured within one of the parts to be assembled, carries two metal blades g^1, g^2 mounted on its opposite sides and bearing yieldingly against an intermediate blade of insulating material g^3 secured also to the support g; the blades g^1, g^2 are connected by the wires g^4, g^5 with the terminals of the switches carried by the walls of the said part of the wrapper. In the other part to be assembled, an insulating support h is also secured and carries two resilient blades h^1 h^2, which are connected by wires h^3, h^4 with the terminals of the switches mounted in the said part of the wrapper; the ends of such blades touch one another and are curved beyond their point of contact in such a manner as to form an open nozzle in which can be engaged the pair of blades g^1 g^2 in forming a closed nozzle. Such engagement takes place when the two parts are brought together to be assembled, so that the wires h^3, h^4 are then connected with the wires g^4 g^5. If the two parts of the wrapper are separated, the blades h^1, h^2 make contact again with one another and put in communication the wires h^3, h^4. In practice, each end of the fractional part of the wrapper will be provided with a pair of blades g^1, g^2 and with a pair of blades h^1, h^2 and similar pairs of blades will be arranged symmetrically in diagonal at the opposite end so that the said fractional parts can be indifferently turned end for end. When the two consecutive parts of the wrapper are separated, there will be a closure of the warning circuit by the blades h^3, h^4 of that part which remains connected with the poles of the warning circuit.

Fig. 5 shows diagrammatically an apparatus composed of fractional parts of the wrapper thus constructed and assembled and so fitted as to protect two pictures i^1, i^2. The wrapper comprises a box a^x inclosing two batteries j and k, two ringing devices j^1 and k^1 and a notice-board having eye-pieces j^2 serving to indicate the numbers of the pictures which might be removed or damaged. The inner walls of such box are provided with spring switches d^6, d^7 of the same kind as those indicated at the upper part of Fig. 1 and shown in detail in Figs. 7 to 10; the said switches being held open

by sheet-metal plates c, c^1, c^2, c^3, c^6, c^7 which cover all the faces of the said box and such switches closing automatically in case such plates should be separated from the walls of the box. In the front wall is provided a door a^{xx} (see Fig. 6) also provided with switches d^6, d^7 and with a sheet-metal plate c^8; such wall carries the switches d^6, d^7 arranged to be opened by push-buttons or projections e^2 associated with the door when the said door is open. All the blades d^6 and the contacts d^7 are connected respectively with the two poles k^2 and k^3 of the circuit comprising the battery k and the ringing device k^1, so that neither the door can be opened nor one of the sheet-metal plates forming the metal casing of the box a^x be removed without the ringing device k^1 being set in motion.

Besides the box a^x, the wrapper comprises a sheath a which extends from such box to the pictures to be protected and which is constructed in a similar manner to that of the box; such sheath is fixed to the walls and may comprise of course elbows as at m (see Fig. 5), one or several branches as at m^1, and even parts widened in the shape of casings as at m^2 or of boxes similar to the box a^x. The details of such sheath are shown in Figs. 7 to 10. It is composed of parts or sections tubular in cross section which are provided with metal casings c, c^1, c^2, c^3 of the above described kind and with spring switches d^6, d^7; all the poles of such switches are connected respectively to the poles k^2 and k^3 through the medium of wires g^4, g^5 and h^3, h^4 secured within the sections and pairs of blades g^1, g^2 and h^1, h^2 placed at the points of junction, so that the ringing device will operate as soon as one of the sheet-metal plates will have been removed or one of the sections will have been separated from the others.

All the parts of the metal casing c are lined with conductor sheet n, of tin for instance, which are insulated from the sheet-metal by insulating coatings of varnish o and of paper o^1. Such metal sheets c and such tin sheets n are connected respectively with the poles of the switches d^6 d^7, so that the ringing device k will operate also when the said sheets c and n will be put in communication by any kind of boring tool. Sheets of paper o^2 are gummed to the inner face of the tin sheets n to prevent them from being damaged by the heads of the push buttons e^1; for the same purpose the heads of such buttons are provided with wide and flat plates e^2. Furthermore, it will be advantageous to insure the electric communication of the successive metal sheets c by overlapping their edges from which the varnish has been taken off as shown in Fig. 9, and also the communication of the successive tin sheets n by means of strips of tin n^1 forming bridges above the joints and making contact with the sheets n across the openings provided in the sheets o^2.

Each of the casings m^2 located behind the pictures to be protected (see Figs. 11 and 12) incloses a series of spring switches d, d^3 similar to those represented in Figs. 1 and 2, which are held open by the tension of the tapes e attached at one end to the blades d and at the other end to the beads p inserted between the canvas and the frame i^3 of the picture, so that should one of such tapes be cut, the blade d released would bear against the contact d^3. Contacts d^{14} are located in front of the contacts d^3, so that if a greater pull is made on the tapes e, the blades will bear against the contacts d^{14}. All the blades d on the one hand and all the contacts d^3, d^{14} on the other hand are connected with the poles j^3 and j^4 of the circuit comprising the battery j, the ringing device j^1 and one of the magnets of the notice board j^2, through the medium of insulated conductor wires q, q^1, so that when any one of the blades d will touch one of the contacts d^3 or d^4, the said circuit will be closed and the ringing device j^1 will operate and at the same time the board j^2 will indicate the number of the corresponding picture i^1.

The tapes e are placed directly against the back of the canvas of the picture and are allotted in a sufficient number on the whole of the surface so that one of the same at least will be reached when the canvas is lacerated or otherwise damaged by a spiteful hand. To secure the casing m^2 and to guide the tapes behind the picture without modifying either the frame i^4 or the frame-work i^3 of the latter, a supplementary frame r will be preferably used and which will be firmly secured to the frame i^4 and will carry the casing m^2, as well as a suitable number of cross pieces r^1, the latter serving to support pulleys s on which the tapes e will be guided. Of course, the number of the tapes and the relative positions of the latter may vary according to the proportions of the pictures.

The casings m^2 are protected in the same way as the other parts of the wrapper by means of a metal jacket or outer casing and of switches kept open by the pressure of such outer casing; but such protecting members have not been shown for greater clearness in the drawings.

The picture i^2 is protected in the same manner as the picture i^1 through the medium of wires q, q^2 connected with the pole j^3 and the pole j^5 of the second electro-magnet of the board j^2. It will be understood that there may be any number of pictures or other objects to be protected.

Fig. 13 shows a part of a warning apparatus adapted to protect a valuable object. The latter is placed direct on a box or casing m^3 inclosing switches arranged on its upper

and lower walls; those d^6, d^7 are opened by the weight of the object t, the weight of which holds the pusher members e^1 lowered and slidable through openings of the upper wall; those d, d^3 are opened by the pull on the wires e passing also through the openings of such wall and attached to the socle of the object t. All the blades being connected with one pole of the warning circuit and all the contacts being connected with the other pole, the said circuit would surely be closed as soon as the object is removed or as the wires e will have been cut. The lateral walls of the casing m^3 will be protected in the same manner as those of the wrapper represented in Figs. 5 to 10.

Fig. 14 shows a modified construction of the protected wrapper, wherein the wall a for instance is provided outwardly with a series of juxtaposed rectangular plates u, e^2, u, e^2. . . . The plates u are secured to the said wall a and the plates e^2 are associated with the movable pusher members e^1 which serve to separate the blades d^6 from the contacts d^7; all such plates are connected electrically with the blades d^6 and hence with a pole of the warning circuit, while the metal casing c of the wrapper is connected with the other pole. Such casing is covered by a coating of varnish or other insulating material o and the plates u, e^2 are also covered with a coating of insulating material o^3 so that when the casing c bears against the said plates the warning circuit is opened; if a hole is bored through the casing c, the tool will surely encounter one of the plates u or e^2 and close the circuit; it will be the same if the casing c is broken out, for one at least of the plates e^2 will be released and will allow of the corresponding switch being closed.

It must be understood that the alarm signals may be of any suitable kind; instead of ringing devices there may be employed for instance electric detonators or the like.

Claims.

1. A warning apparatus for the protection of valuable objects comprising the combination of an electric alarm signal, a battery, a circuit in which such signal and such battery are intercalated, a wrapper which extends to the objects to be protected and which incloses entirely the said signal, the said battery and the said circuits, a metal sheath covering the said wrapper, spring switches mounted on the walls of the said wrapper, and means influenced by the position of the parts of the said sheath for maintaining such switches open so long as the metal sheath is applied on the wrapper and for allowing the said switches to close as soon as a part of the sheath is separated, such switches being intercalated in the said warning circuit.

2. A warning apparatus for the protection of valuable objects comprising the combination of an alarm signal, a battery, a circuit in which such signal and such battery are intercalated, a wrapper which incloses entirely the said signal, the said battery and the said circuit and which extends to the objects to be protected, a metal sheath covering the said wrapper, spring switches mounted on the walls of the said wrapper and intercalated in the said circuit, screws, bolts or other similar fastening members fixing or assembling the parts of such sheath together, and means influenced by the tightening and the loosening of such fastening means for opening and closing the said switches in such a manner as to hold such switches open so long as the sheath is firmly assembled and to allow the closure of the same as soon as the parts of the sheath are separated or partly opened.

3. A warning apparatus for the protection of valuable objects comprising the combination of an alarm signal, a battery, a circuit in which such signal and such battery are intercalated, a wrapper which incloses entirely such signal, such battery and such circuit and which extends to the objects to be protected, a metal sheath covering such wrapper, a conductor lining between the said wrapper and the said sheath, one or more coatings of insulating material separating such lining from the said sheath, spring switches mounted on the walls of the said wrapper and intercalated in the said circuit, and means influenced by the position of the parts of the sheath in such a manner as to hold the said switches open when such sheath remains intact and to allow such switches to close when the corresponding parts of the said sheath are separated, such sheath and such conductor lining being also connected to the said circuit.

4. A warning apparatus for the protection of valuable objects comprising the combination of a wrapper composed of parts in the shape of sheaths and of parts in the shape of boxes or casings, a metal sheath covering such wrapper, spring switches mounted on the walls of the said wrapper and held open by the pressure of the parts of the said sheath, spring switches being also mounted on the walls of such wrapper, means connected with the objects to be protected and acting on these latter switches to maintain the same normally open and to allow such switches to close when the said objects are deranged or partly destroyed, an alarm signal, a battery, a circuit in which such signal, such battery and the first named switches are intercalated, a second battery, a second signal, a notice board, and a second circuit in which the said second battery, the said second signal, the said notice board and the second named switches are intercalated.

5. In a warning apparatus for the pro-

tection of valuable objects the combination of a wrapper, spring switches in such wrapper and means connected with the valuable objects to be protected and acting on the said switches to maintain the same normally open and to allow the closure of such switches when the said objects are deranged or partly destroyed, the said switches comprising each a resilient blade and two contacts placed at the opposite sides of such blade and the said means comprising tapes which are attached on the one part to the valuable objects and on the other part to the blades of the said switches.

6. In a warning apparatus for the protection of valuable objects, the combination of a wrapper, a warning circuit in such wrapper, spring switches in the said wrapper and comprising each a resilient blade and a stationary contact, a series of juxtaposed plates on the outer wall or surface of the wrapper, some of the plates being fixed to such wall and the other being movable and operatively connected with the said switch blades, and a metal sheath placed outwardly against the said plates and electrically insulated from the latter, the said sheath and the said plates being connected with the opposite poles of the warning circuit.

In testimony, that I claim the foregoing as my invention I have signed my name in presence of two subscribing witnesses.

AUGUSTE LÉON PUCEL.

Witnesses:
HANSON C. COXE,
MAURICE ROUX.

Copies of this patent may be obtained for five cents each, by addressing the "Commissioner of Patents, Washington, D. C."