US 20080272140A1

(19) **United States**

(12) **Patent Application Publication**

(10) **Pub. No.: US 2008/0272140 A1**

(43) **Pub. Date: Nov. 6, 2008**

Mowers et al.

(54) **CASSETTE FOR DISPENSING FLEXIBLE TUBING THEREFROM**

(75) Inventors: **Stephen Mowers**, Fairfield, CT (US); **John Rousso**, Trumbull, CT (US); **Michael Jackson**, Wooster, OH (US)

Correspondence Address:
MICHAUD-DUFFY GROUP LLP
306 INDUSTRIAL PARK ROAD, SUITE 206
MIDDLETOWN, CT 06457 (US)

(73) Assignee: **Playtex Products, Inc.**, Wesport, CT (US)

(21) Appl. No.: **11/800,324**

(22) Filed: **May 4, 2007**

Publication Classification

(51) **Int. Cl.**
B65H 49/02 (2006.01)

(52) **U.S. Cl.** **221/69**

(57) **ABSTRACT**

In a cassette for dispensing flexible tubing a cassette body includes a central tubular portion defining an aperture extending therethrough. An outer wall surrounds the central tubular portion and a cassette bottom extends between and connects the outer wall and the central tubular portion. The outer wall, the cassette bottom and the central tubular portion cooperate to define an interior area that surrounds the central tubular portion. A length of flexible tubing is positioned in the interior area. The cassette bottom includes first registration features and a cover is coupled to the body and at least partially overlies the interior area, the cover defining second registration features matingly engageable with the first registration features so that cassettes can be stacked one-on-top-of-the-other with the cooperation of the first and second registration features preventing successively stacked cassettes from shifting relative to one another.

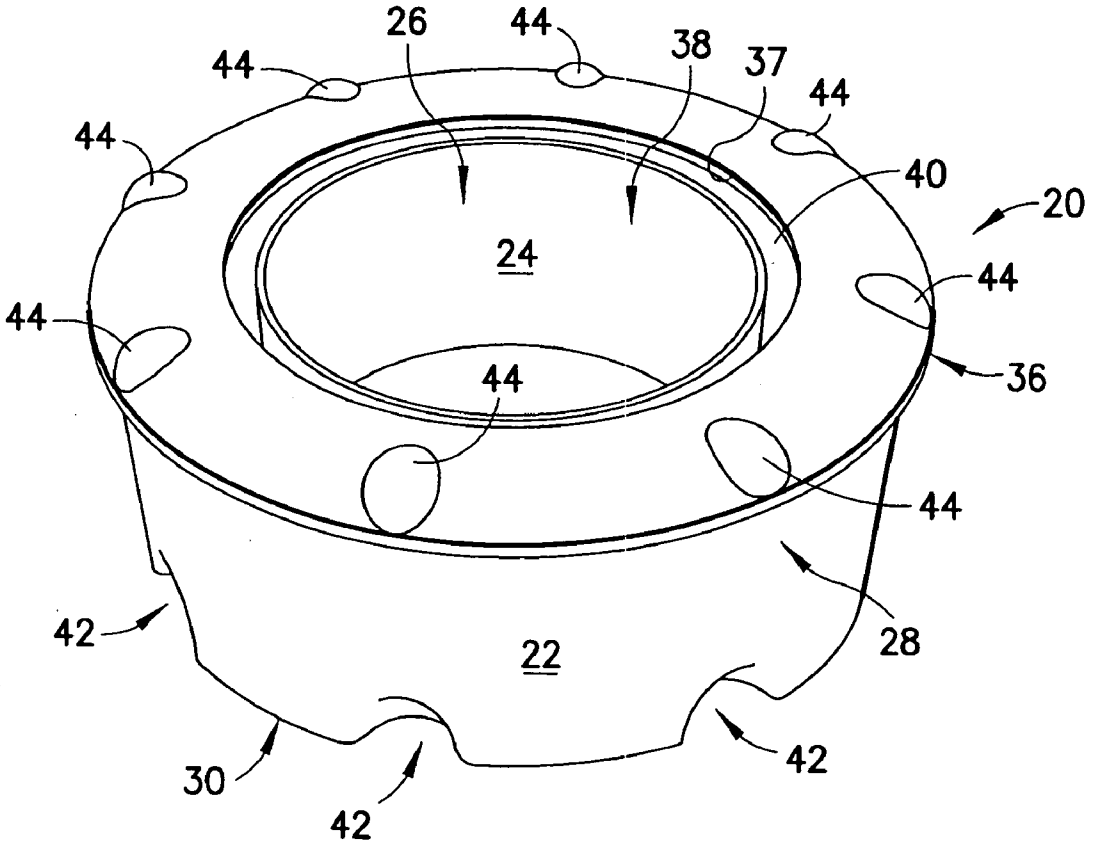

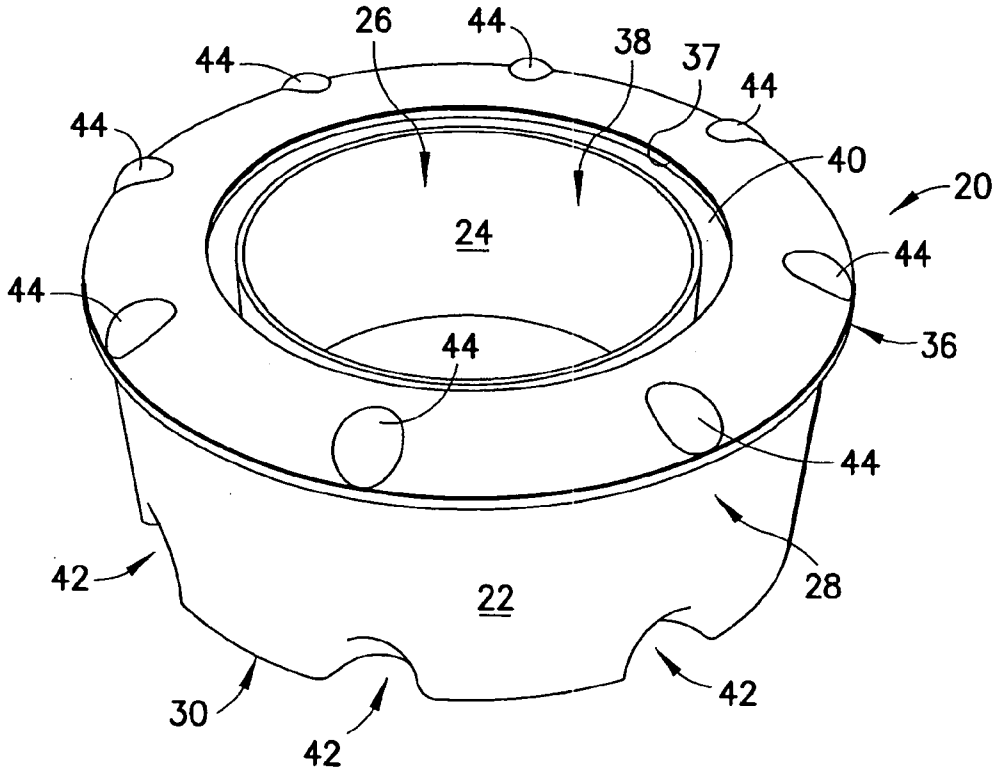
26
44
38
37
44
44
44
40
20
24
44
44
36
44
44
44
28
42
22
42
30
42

FIG. 1

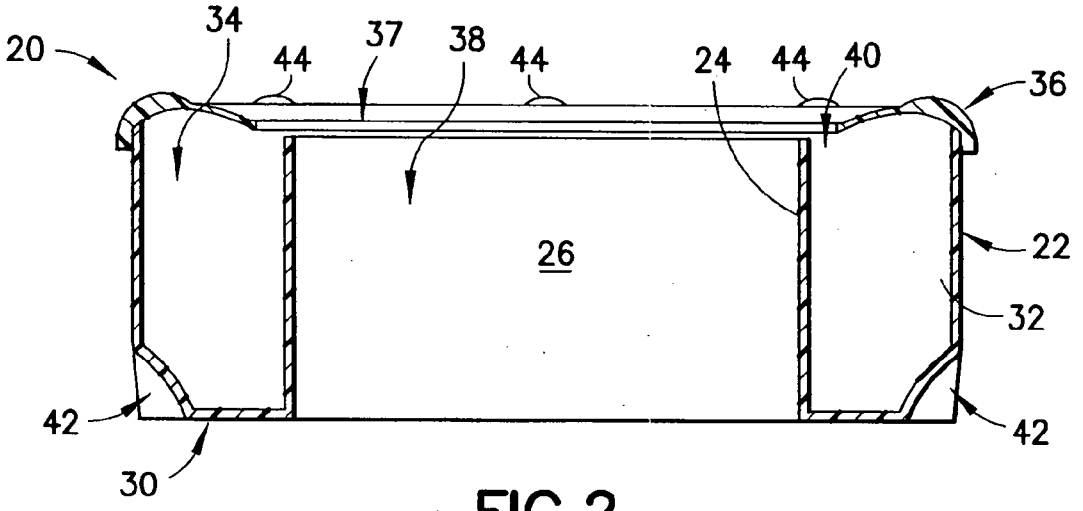
20
34
44
37
38
44
24
44
40
36
26
22
32
42
30
42

FIG. 2

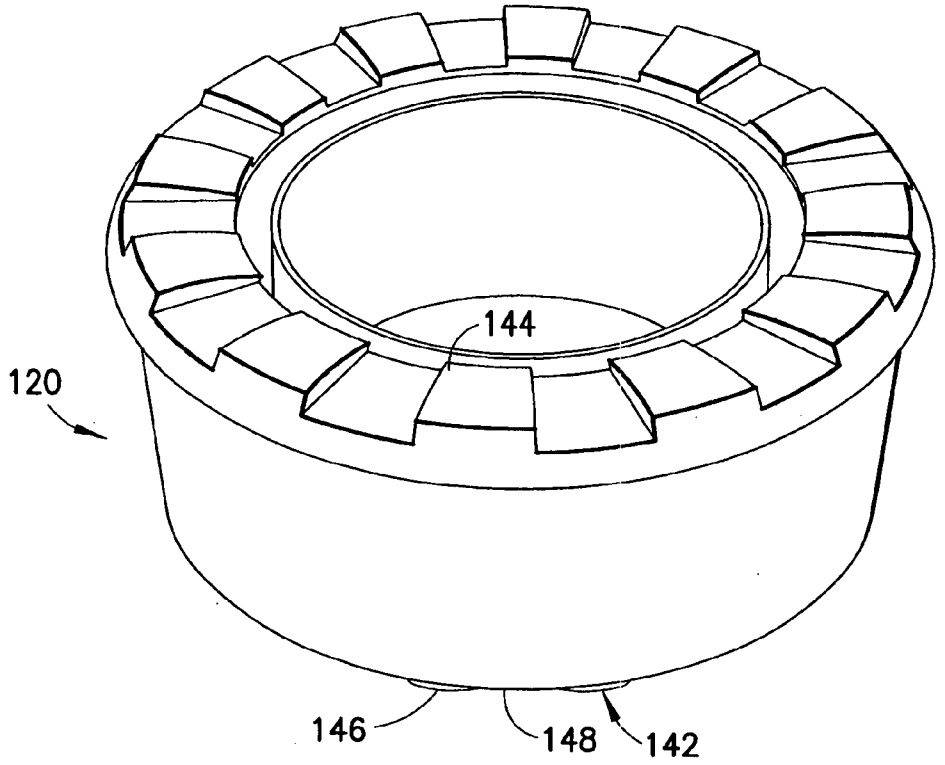

FIG.3

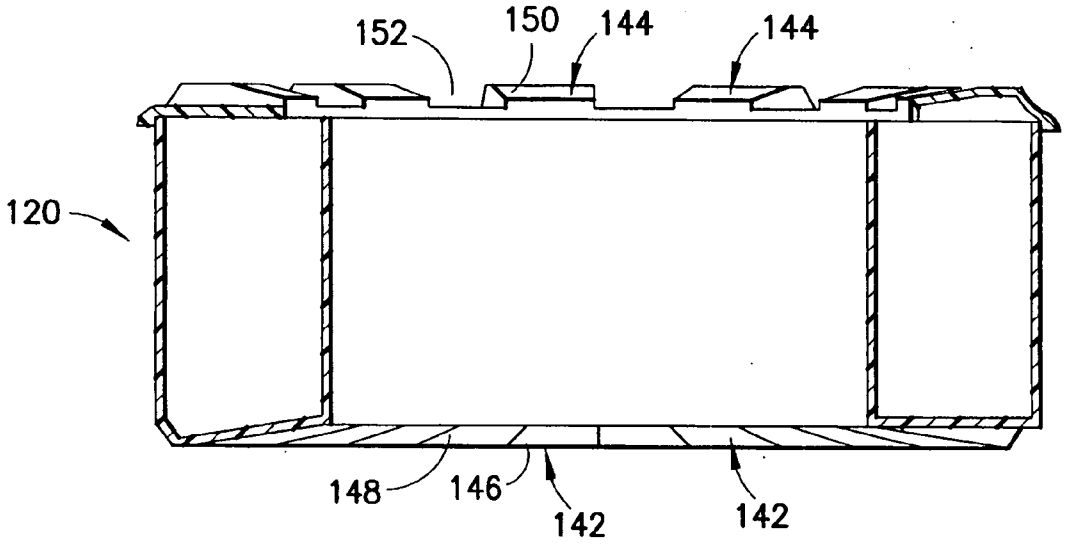

FIG.4

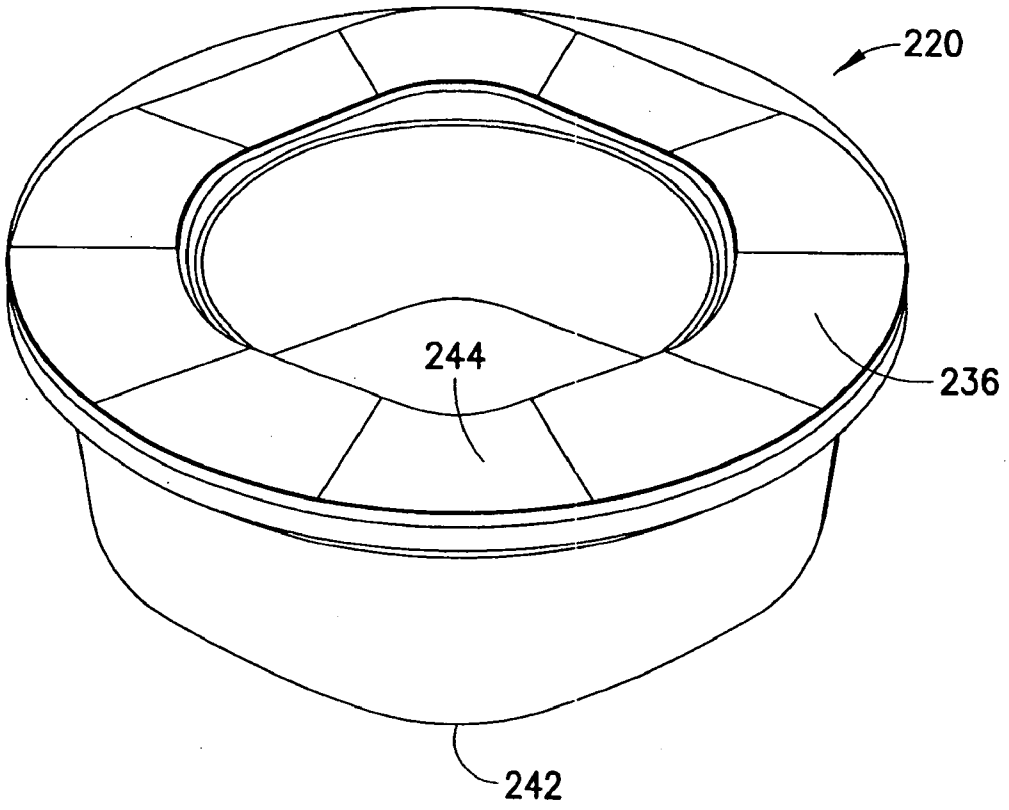

FIG.5

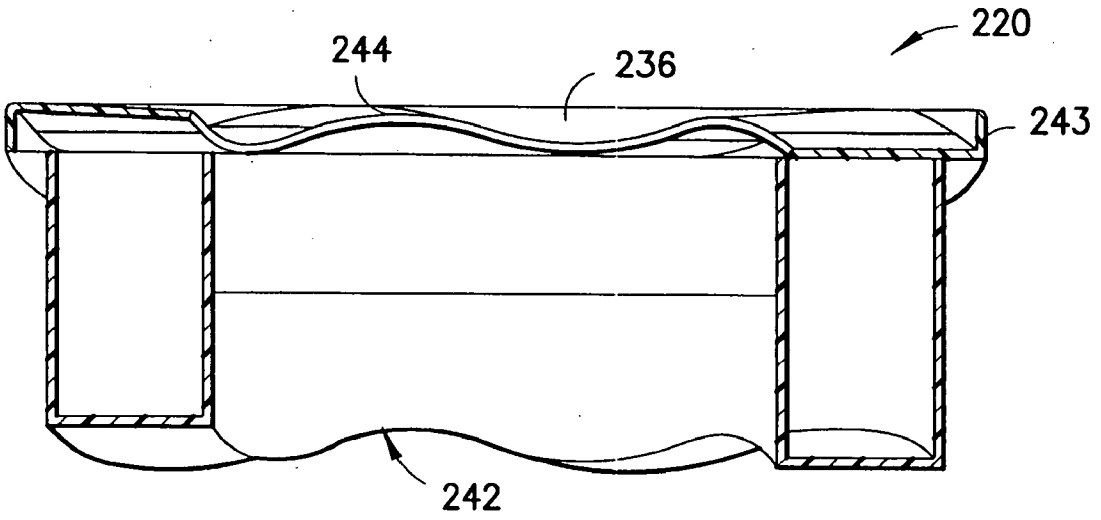

FIG.6

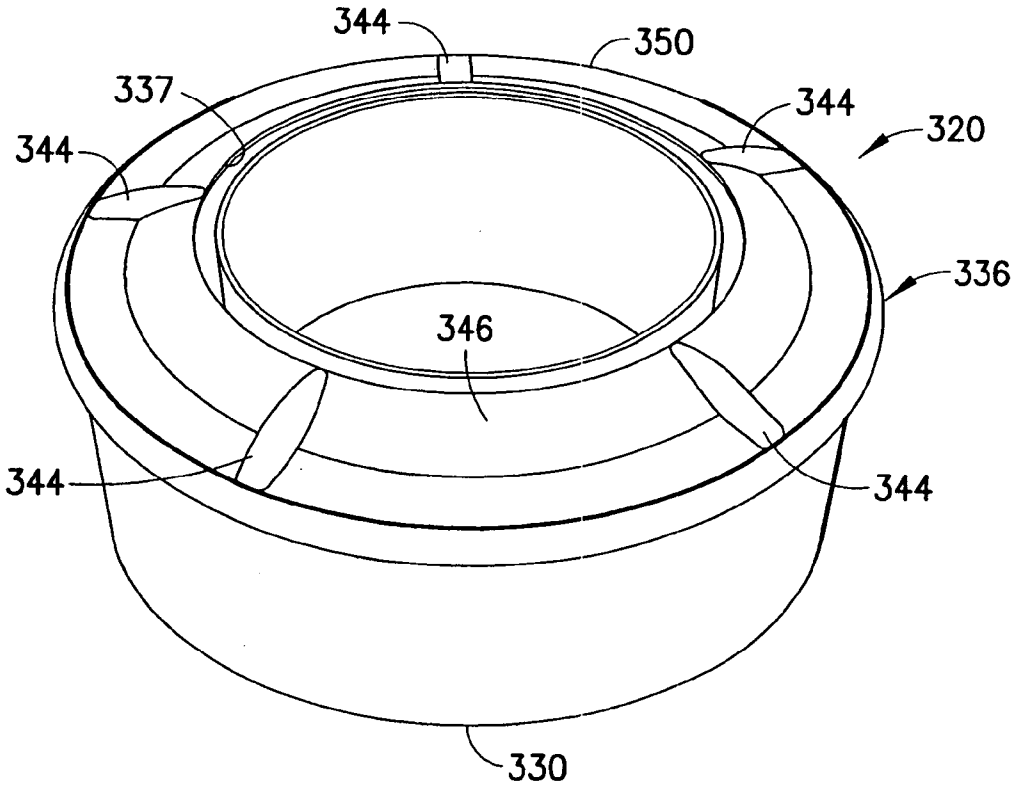
344
350
337
344
320
344
336
346
344
344
330

FIG.7

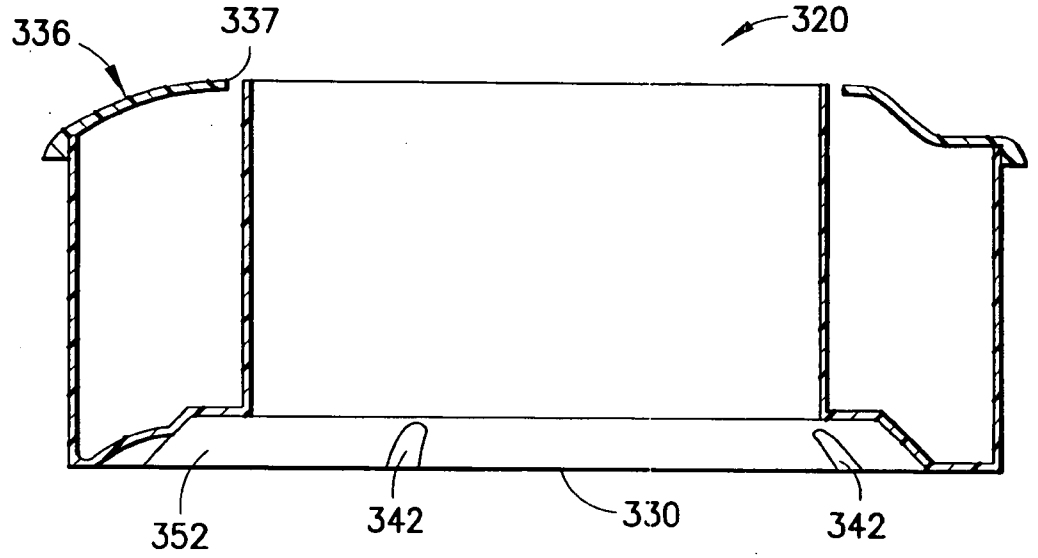
336
337
320
352
342
330
342

FIG.8

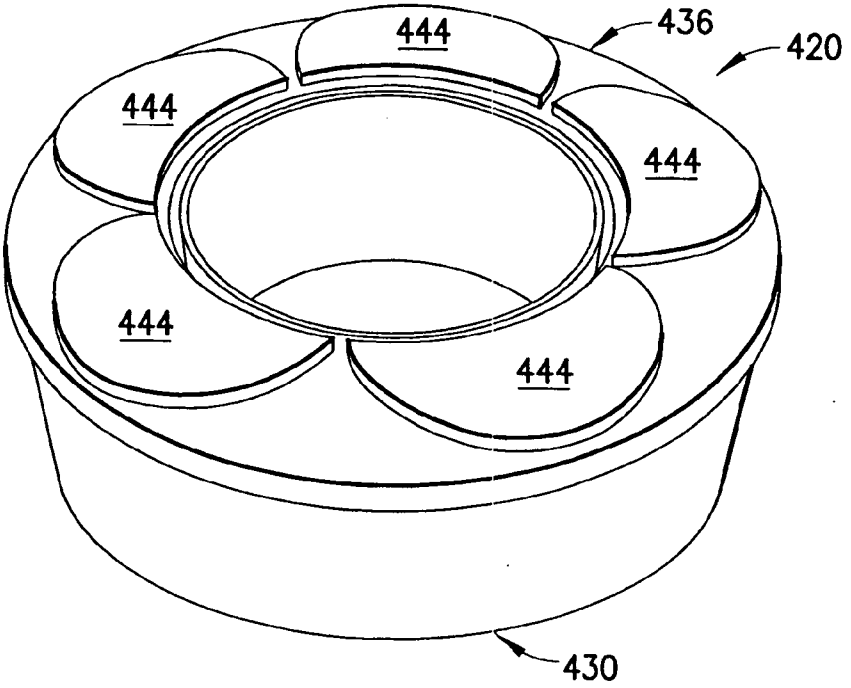

FIG.9

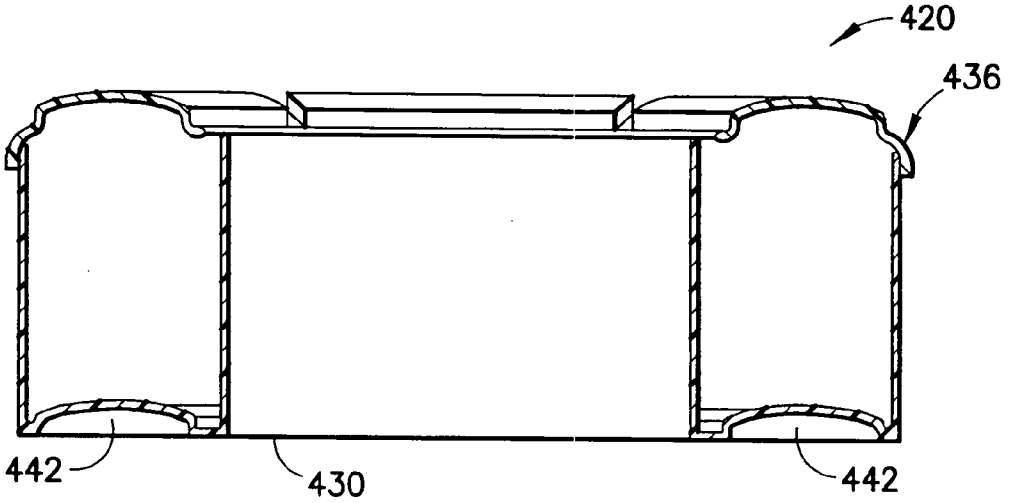

FIG.10

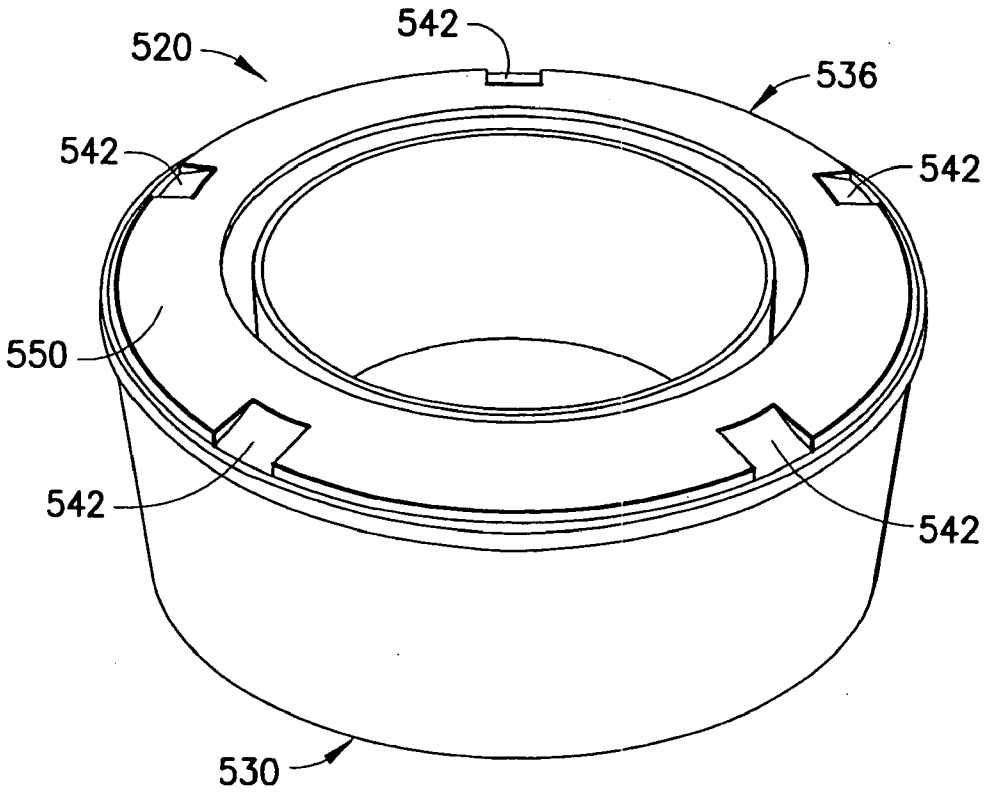
542
520
536
542
542
550
542
542
530

FIG. 11

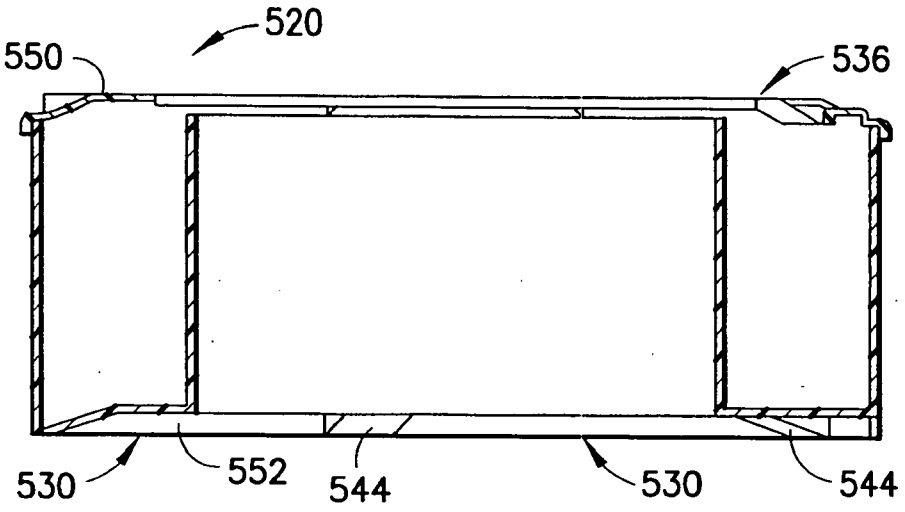
520
550
536
530
552
544
530
544

FIG. 12

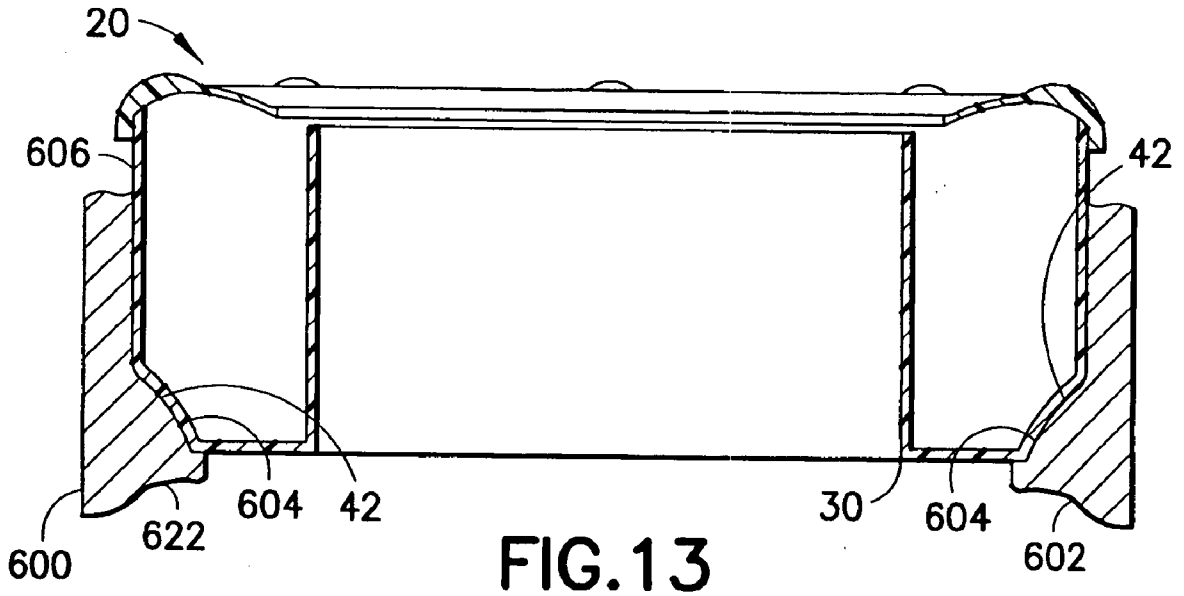

FIG. 13

CASSETTE FOR DISPENSING FLEXIBLE TUBING THEREFROM

FIELD OF THE INVENTION

[0001] The present invention is generally related to cassettes having plastic tubing therein used in the disposal of waste products such as soiled diapers and is more particularly related to said cassettes having registration features thereon for more efficient stacking as well as to aid in the prevention of improper installation of the cassettes into a receptacle operable therewith.

BACKGROUND OF THE INVENTION

[0002] Historically, waste materials such as soiled diapers were disposed of by simply placing them in the trash, however, this presented sanitary and odor problems. Moreover, with regard to soiled diapers, these are typically disposed of, albeit temporarily, in the area where the child is changed. Usually this is the nursery where the child sleeps and spends a considerable amount of time. As such, maintaining a sanitary and relatively odor free environment is important.

[0003] A number of systems have been developed to address the above-described disposal and sanitary issues associated with soiled diapers. One such disposal system is referred to as the Diaper Genie® manufactured by Playtex Products, Inc. of Westport, Conn. This system employs a receptacle having an interior waste storage area and an interior area for receiving and retaining a cassette having a length of plastic tubing stored therein and dispensable therefrom. When a soiled diaper is inserted into the receptacle, it is pushed through an opening in the cassette where the soiled diaper is encased and substantially sealed within the plastic tubing. Once the quantity of plastic tubing in the cassette has been exhausted, the cassette is removed from the receptacle and replaced with a new cassette.

[0004] A problem that can sometimes occur when placing the cassette in the receptacle is that the cassette can inadvertently be installed upside down. When this occurs and a soiled diaper is inserted into the receptacle through the cassette, the diaper is exposed to parts of the cassette prior to encountering the plastic tubing. This creates potential sanitary problems. In addition, an overabundance of plastic tubing can be dispensed resulting in the cassette having to be prematurely replaced. Moreover, the amount of plastic tubing remaining in the cassette is not readily ascertainable.

[0005] Another difficulty associated with the above-described cassettes arises from the fact that they are sold in stores as replacements for exhausted cassettes and therefore must be shipped in boxes to the various retail outlets. In order to be shipped and sold, the cassettes are generally stacked in the boxes and then stacked on top of one another on store shelves. The configuration of the cassettes has made them susceptible to toppling or shifting relative to one another when stacked on the store shelves. The cassette configuration has also made them difficult to stack so packing them into boxes for shipment is less than optimal.

[0006] Based on the foregoing, it is the general object of the present invention to provide a cassette and a cassette and receptacle system that improves upon or overcomes the problems and drawbacks associated with known cassettes and receptacles.

SUMMARY OF THE INVENTION

[0007] The present invention resides in one aspect in a cassette for dispensing flexible tubing. The cassette includes a cassette body having a central tubular portion defining an aperture extending therethrough, through which, during use, waste materials such as soiled diapers are passed. The cassette includes an outer wall that surrounds the central tubular portion with a cassette bottom extending between and connecting the outer wall and the central tubular portion. The cooperation of the outer wall, the cassette bottom and the central tubular portion defines an interior area into which a length of flexible tubing is positioned to be dispensed from the cassette. A cover is coupled to the cassette body and at least partially overlies the interior area.

[0008] The cassette bottom includes first registration features located on an outwardly facing surface with the cover defining second registration features also located on an outwardly facing surface. The first registration features defined by the cassette bottom and the second registration features defined by the cover are matingly engageable with one another so that cassettes can be stacked one-on-top-of-the-other with the cooperation of the first and second registration features preventing successively stacked cassettes from shifting relative to one another.

[0009] In an embodiment of the present invention, one of the first and second registration features includes at least one and preferably a plurality of outwardly projecting protuberances with the other of the first and second registration features including at least one and preferably a plurality of recesses complementarily shaped to engage the protuberances. In a preferred embodiment of the present invention, the cassette bottom and the cover are each circular with the plurality of protuberances being defined by a plurality of raised bumps projecting outwardly from one of the cassette bottom and the cover, the raised bumps being radially and circumferentially spaced there around. Likewise, the recesses are radially and circumferentially spaced around the other of the cassette bottom and the cover. Each of the recesses is complimentarily shaped to engage at least one of the protuberances when cassettes are successively stacked one-on-top-of-the-other.

[0010] In another embodiment of the present invention the first registration features are defined by one or more first steps, each having a first raised portion and a corresponding first recessed portion. The second registration features are defined by one or more second steps each having a second raised portion and a corresponding second recessed portion. The first raised portions are matingly engageable with the second recessed portions and the first recessed portions are matingly engageable with the second raised portions so that when cassettes are stacked one on top of the other, the first steps of one of the cassettes engage the second steps of another of the cassettes thereby minimizing relative movement between successively stacked cassettes.

[0011] In still another embodiment of the present invention, the first registration features include a first undulating surface formed by the cassette bottom and the second registration features include a second undulating surface formed by the cover. The first and second undulating surfaces are matingly engageable with one another so that when cassettes are

stacked one on top of the other, the first undulating surface of one of the cassettes engages the second undulating surface of another of the cassettes thereby minimizing relative movement between successively stacked cassettes. Preferably, in this embodiment of the present invention, a lip extends along a peripheral surface defined by the cover so that an outer periphery defined by the cassette bottom is slidably engageable with the lip when one cassette is positioned on top of another cassette.

[0012] In yet another embodiment of the present invention, the cover and the cassette bottom are each substantially circular with one of the first and second registration features including a plurality of outwardly projecting ribs and the other of the first and second registration features including a plurality of recesses. When two or more cassettes are stacked on top of one another, the ribs defined by one cassette are matingly receivable in the recesses defined by another cassette. Preferably, and in addition to the ribs and recesses described above, the cassette bottom and the cover each define an outer peripheral edge with one of the cassette bottom and the cover defining an annular raised area positioned internally of the peripheral edge and the other of the cassette bottom and the cover defining an annular recessed portion positioned internally of the peripheral edge. The annular raised portion is slidably engageable with the annular recessed portion when cassettes are successively stacked on top of one another.

[0013] The present invention resides in a second aspect in a cassette for dispensing flexible tubing and a receptacle for receiving the cassette. The cassette is configured essentially as described above with the exception that for this embodiment it is not necessary for the cover to include registration features. Accordingly, the cassette includes a cassette body having a central tubular portion defining an aperture extending therethrough. An outer wall surrounds the central tubular portion and a cassette bottom extends between and connects the outer wall and the central tubular portion. The outer wall, the cassette bottom and the central tubular portion cooperate to define an interior area that surrounds the central tubular portion and into which a length of flexible tubing is positioned. A cover is coupled to the body and at least partially overlies the interior area so that the flexible tubing can be dispensed through an opening defined by an inner peripheral edge of the cover and the central tubular portion. The cassette bottom includes first registration features. While the cover has been described as not necessarily including registration features, this embodiment of the present is not limited in this regard as the cover can include registration features mating engageable with the registration features defined by the cassette bottom so that the registration features of successively stacked cassettes engage one another. The receptacle includes an opening sized at least to receive the cassette and defines alignment features matingly engageable with those defined by the cassette bottom thereby minimizing the likelihood of the cassette being improperly installed within the receptacle.

BRIEF DESCRIPTION OF THE DRAWINGS

[0014] FIG. **1** is a perspective view of an embodiment of the cassette of the present invention.

[0015] FIG. **2** is a cross-sectional side elevational view of the cassette of FIG. **1**.

[0016] FIG. **3** is a perspective view of an embodiment of the cassette of the present invention.

[0017] FIG. **4** is a cross-sectional side elevational view of the cassette of FIG. **3**.

[0018] FIG. **5** is a perspective view of an embodiment of the cassette of the present invention.

[0019] FIG. **6** is a cross-sectional side elevational view of the cassette of FIG. **5**.

[0020] FIG. **7** is a perspective view of an embodiment of the cassette of the present invention.

[0021] FIG. **8** is a cross-sectional side elevational view of the cassette of FIG. **7**.

[0022] FIG. **9** is a perspective view of an embodiment of the cassette of the present invention.

[0023] FIG. **10** is a cross-sectional side elevational view of the cassette of FIG. **9**.

[0024] FIG. **11** is a perspective view of an embodiment of the cassette of the present invention.

[0025] FIG. **12** is a cross-sectional side elevational view of the cassette of FIG. **11**.

[0026] FIG. **13** is a partial cross-sectional view illustrating the cassette of FIG. **1** positioned in a receptacle with the registration features defined by a bottom surface of the cassette matingly engaged with complimentarily-shaped alignment features defined by a seating surface of the receptacle.

DETAILED DESCRIPTION OF THE PREFERRED EMBODIMENT OF THE PRESENT INVENTION

[0027] As shown in FIGS. **1** and **2**, a cassette for dispensing plastic tubing is generally designated by the reference number **20**. The cassette includes a cassette body generally designated by the reference number **22**. The cassette body is defined by a tubular central portion **24** having an aperture **26** extending therethrough. An outer wall **28** surrounds the tubular central portion **24** and is connected thereto by a cassette bottom **30**. The tubular central portion **24**, the outer wall **28** and the cassette bottom **30** cooperate together to define an interior area **32** into which a length of flexible tubing **34** is operably positioned. A cover generally designated by the reference number **36** is attached to the body **22**. The cover **36** has an interior peripheral edge **37** that defines an opening **38** extending through the cover. The opening **38** is sized to form a gap **40** between the tubular central portion **24** and the interior peripheral edge **37** of the cover **24**. While the cassette **20** has been shown in the illustrated embodiment as being cylindrical, the present invention is not limited in this regard as other shapes such as squares, rectangles, ovals, and the like, or combinations of these shapes, can be substituted without departing from the broader aspects of the present invention.

[0028] Still referring to FIGS. **1** and **2**, the cassette bottom **30** defines first registration features, shown in the illustrated embodiment as a plurality of recesses **42** radially spaced around an outer periphery of the cassette bottom. Similarly, the cover **36** defines second registration features, shown in the illustrated embodiment as a plurality of protuberances or raised bumps **44**. The recesses **42** and the raised bumps **44** are complimentarily shaped relative to one another so that when cassettes **20** are stacked one-on-top-of-the-other, the raised bumps **44** of one cassette matingly engage the recesses **42** of the next successive cassette, thereby minimizing the potential for relative movement between successively stacked cassettes. While a plurality of recesses **42** and raised bumps **44** have been shown and described, the present invention is not limited in this regard as any number of recesses and raised bumps, even a single recess and raised bump can be employed. In addition, while the recesses and raised bumps,

42 and 44 respectively, have been shown as all being the same size and shape, the present invention is not limited in this regard as different shapes, different sizes, and combinations of different sizes and shapes can be employed without departing from the broader aspects of the present invention.

[0029] As shown in FIGS. 3 and 4, an embodiment of the cassette 20 is shown therein and generally referred to by the reference number 120. The cassette 120 is similar in many respects to the cassette 20, accordingly like elements will be given similar reference numbers preceded by the numeral 1. The cassette 120 differs from the cassette 20 in that instead of recesses 42 and raised bumps 44, the first and second registration features are in the form of first and second steps, 142 and 144 respectively. Each of the first steps 142 is formed by a raised portion 146 and an adjacent recessed portion 148. Likewise, each of the second steps 144 is formed by a raised portion 150 and a corresponding recessed portion 152. Accordingly, when two or more cassettes 120 are stacked one-on-top-of-the-other, the first and second steps, 142 and 144 respectively, matingly engage one another.

[0030] As shown in FIGS. 5 and 6, an embodiment of the cassette 20 is shown therein and generally referred to by the reference number 220. The cassette 220 is similar in many respects to the cassette 20, accordingly like elements will be given similar reference numbers preceded by the numeral 2. The cassette 220 differs from the cassette 20 in that instead of recesses 42 and raised bumps 44, the first and second registration features are in the form of first and second undulating surfaces, 242 and 244 respectively. Each of the first and second undulating surfaces, 242 and 244 respectively, is formed by a by a series of successive peaks and valleys which in the illustrated embodiment vary in a sinusoidal pattern. Accordingly, when two or more cassettes 220 are stacked one-on-top-of-the-other, the peaks of one of the first and second undulating surfaces, 242 and 244 respectively, matingly engage the valleys of the other of the first and second undulating surfaces thereby causing successively stacked cassettes to nest into one another. The cover 236 of the cassette 220 includes a lip 243 extending around an outer peripheral edge of the cover. When two or more cassettes 220 are stacked on top of one another, the lip 243 slidingly engages the outer wall 228 [not labeled on Figure] of the next successively stacked cassette thereby minimizing or preventing the potential for relative movement between the cassettes.

[0031] As shown in FIGS. 7 and 8, an embodiment of the cassette 20 is shown therein and generally referred to by the reference number 320. The cassette 320 is similar in many respects to the cassette 20, accordingly like elements will be given similar reference numbers preceded by the numeral 3. The cassette 320 differs from the cassette 20 in that instead of raised bumps 44, the second registration features defined by the cover 336 are in the form of outwardly projecting ribs 344 spaced radially around the cover. The second registration features defined by the cassette bottom 330 are in the form of recesses 342 sized and positioned to matingly engage the ribs 344 when cassettes 320 are stacked one-on-top-of-the-other. In addition to the ribs 344 the cover 336 also defines an annular raised portion 346 located internally of an outer peripheral edge 350 of the cover. In the illustrated embodiment, the annular raised portion 336 extends to the inner peripheral edge 337 defined by the cover. The cassette bottom 330 includes an annular recessed portion 352, best seen in FIG. 8, that is complimentarily shaped to matingly engage the annular raised portion 346 defined by the cover 336 when two cassettes 320 are successively stacked on top of one another. While the ribs 344 and the recesses 342 have been shown and described as being located on the cover 336 and the cassette bottom 330 respectively, the present invention is not limited in this regard as the location of the ribs and recesses can be reversed. In such a situation, the ribs 344 would be located on the cassette bottom 330 and the recesses 342 would be located on the cover. Likewise, the locations of the annular raised portion 346 and the annular recessed portion 352 can be switched so that the annular raised portion is located on the cassette bottom 330 and the annular recessed portion is located on the cover 336, without departing from the broader aspects of the present invention.

[0032] As shown in FIGS. 9 and 10, an embodiment of the cassette 20 is shown therein and generally referred to by the reference number 420. The cassette 420 is similar in many respects to the cassette 20, accordingly like elements will be given similar reference numbers preceded by the numeral 4. The cassette 420 differs from the cassette 20 in that instead of raised bumps 44, the second registration features are in the form of semi-circular raised portions 444. The cassette bottom 430 includes semi-circular recesses 442, best seen in FIG. 10, that are complimentarily shaped relative to the semi-circular raised portions 444 so that when cassettes 420 are stacked on top of one another, the semi-circular raised portions 444 matingly engage the semi-circular recessed portions 442. While the semi-circular raised portions 444 and the semi-circular recesses 442 have been shown and described as being located on the cover 436 and the cassette bottom 430 respectively, the present invention is not limited in this regard as the location of the raised portions and recesses can be reversed. In such a situation, the semi-circular raised portions 444 would be located on the cassette bottom 430 and the semi-circular recesses 442 would be located on the cover 436.

[0033] As shown in FIGS. 11 and 12, an embodiment of the cassette 20 is shown therein and generally referred to by the reference number 520. The cassette 520 is similar in many respects to the cassette 20, accordingly like elements will be given similar reference numbers preceded by the numeral 5. The cassette 520 differs from the cassette 20 in that instead of recesses 42 and raised bumps 44, the first and second registration features are in the form of slots 542 and key portions 544, located on the cover 536 and the cassette bottom 530 respectively. In addition the cover 536 defines an outwardly extending arcuate upper surface 550 and the cassette bottom 530 defines an inwardly extending arcuate recess 552 complimentarily shaped to matingly engage the arcuate upper surface 550 when cassettes 520 are stacked on top of one another. Accordingly, when two or more cassettes 520 are stacked on top of one another, the key portions 544 engage the slots 542 and the arcuate raised portion 550 engages the arcuate recessed portion 552. While the slots 542 have been shown and described as being positioned on the cover 536 and the key portions 544 have been shown and described as being located on the cassette bottom 530, the present invention is not limited in this regard as the positions of the slots and key portions can be reversed. Likewise, the locations of the arcuate raised portion 550 and the arcuate recessed portion 552 can also be reversed without departing from the broader aspects of the present invention.

[0034] Referring to FIG. 13, the above-described cassette 20 is shown positioned in a receptacle 600. The receptacle is only partially illustrated as it can take any number of forms. However, each receptacle 600 of the present invention will

include a seat portion **602** defining alignment features **604** that are matingly engageable with the first registration features **42**, **142**, **242**, **342**, **442**, and **542** defined by the cassette bottom **30**, **130**, **230**, **330**, **430**, and **530**. In this manner the cassette **20**, **120**, **220**, **320**, **420** and **520** can be passed through an opening **606** defined by the receptacle and positioned on the seat portion **602** so that the first engagement features mate with the alignment features thereby minimizing the potential for the cassette to be installed upside down.

[0035] Although this invention has been shown and described with respect to the detailed embodiments thereof, it will be understood by those of skill in the art that various changes may be made and equivalents may be substituted for elements and steps thereof without departing from the scope of the invention. In addition, modifications may be made to adapt a particular situation to the teachings of the invention without departing from the essential scope thereof. Therefore, it is intended that the invention not be limited to the particular embodiments disclosed in the above detailed description, but that the invention will include all embodiments falling within the scope of the above description.

What is claimed is:

1. A cassette for dispensing flexible tubing, said cassette comprising:

a cassette body having a central tubular portion defining an aperture extending therethrough, an outer wall surrounding said central tubular portion and a cassette bottom extending between and connecting said outer wall and said central tubular portion;

said outer wall, said cassette bottom and said central tubular portion cooperating to define an interior area that surrounds said central tubular portion;

a length of flexible tubing positioned in said interior area;

said cassette bottom including first registration features;

a cover coupled to said body and at least partially overlying said interior area, said cover defining second registration features matingly engageable with said first registration features so that cassettes can be stacked one-on-top-of-the-other with the cooperation of said first and second registration features minimizing the potential for successively stacked cassettes from shifting relative to one another.

2. A cassette as defined by claim **1** wherein one of said first and second registration features includes at least one outwardly projecting protuberance and the other of said first and second registration features includes at least one recess complimentarily shaped to engage said protuberance.

3. A cassette as defined by claim **2** wherein said at least one protuberance includes a plurality of protuberances and said at least one recess includes a plurality of recesses.

4. A cassette as defined by claim **3** wherein said cassette bottom and said cover are each circular and said plurality of protuberances include a plurality of raised bumps projecting outwardly from and spaced circumferentially around one of said cassette bottom and said cover, and said plurality of recesses are spaced circumferentially around the other of said cassette bottom and said cover, said recesses being complimentarily shaped to engage said bumps when successive cassettes are stacked one-on-top-of-the-other.

5. A cassette as defined by claim **1** wherein said first registration feature is defined by one or more first steps, each having a first raised portion and a corresponding first recessed portion and said second registration feature is defined by one or more second steps each having a second raised portion and a corresponding second recessed portion, and wherein said first raised portions are matingly engageable with said second recessed portions and said first recessed portions are matingly engageable with said second raised portions so that when cassettes are stacked one on top of the other, said first steps of one of said cassettes engage said second steps of another of said cassettes thereby minimizing relative movement between successively stacked cassettes.

6. A cassette as defined by claim **1** wherein said first registration features include a first undulating surface formed by said cassette bottom and said second registration features include a second undulating surface formed by said cover and wherein said first and second undulating surfaces are matingly engageable with one another so that when cassettes are stacked one on top of the other, said first undulating surface of one of said cassettes engages said second undulating surface of another of said cassettes thereby minimizing relative movement between successively stacked cassettes.

7. A cassette as defined by claim **6** further comprising a lip extending along a peripheral surface defined by said cover so that an outer periphery defined by said cassette bottom is slidably engageable with said lip when one cassette is positioned on top of another cassette.

8. A cassette as defined by claim **7** wherein said cover and said bottom are circular.

9. A cassette as defined by claim **1** wherein said cover and said cassette bottom are each substantially circular and one of said first and second registration features includes a plurality of outwardly projecting ribs and the other of said first and second registration features includes a plurality of recesses, said ribs being matingly receivable in said recesses when cassettes are successively stacked on top of one another.

10. A cassette as defined by claim **9** wherein said cassette bottom and said cover each define a peripheral edge and one of said cassette bottom and said cover defines an annular raised portion positioned internally of said peripheral edge and the other of said cassette bottom and said cover defines an annular recessed portion positioned internally of said peripheral edge and wherein said annular raised portion is slidably engageable with said annular recessed portion when cassettes are successively stacked on top of one another.

11. A cassette for dispensing flexible tubing and a receptacle for receiving said cassette:

said cassette comprising a cassette body having a central tubular portion defining an aperture extending therethrough, an outer wall surrounding said central tubular portion and a cassette bottom extending between and connecting said outer wall and said central tubular portion;

said outer wall, said cassette bottom and said central tubular portion cooperating to define an interior area that surrounds said central tubular portion;

a length of flexible tubing positioned in said interior area;

said cassette bottom including first registration features; and

a cover coupled to said body and at least partially overlying said interior area;

said receptacle including an opening sized at least to receive said cassette; and

alignment features defined by said receptacle; and

wherein said first registration features and said alignment features are matingly engageable with one another to prevent said cassette from being improperly positionable in said receptacle.

12. A cassette for dispensing flexible tubing and a receptacle for receiving said cassette as defined by claim **11** wherein one of said first registration features and said alignment features includes at least one outwardly projecting protuberance and the other of said first registration features and said alignment features includes at least one recess complimentarily shaped to engage said protuberance.

13. A cassette for dispensing flexible tubing and a receptacle for receiving said cassette as defined by claim **12** wherein said at least one protuberance includes a plurality of protuberances and said at least one recess includes a plurality of recesses.

14. A cassette for dispensing flexible tubing and a receptacle for receiving said cassette as defined by claim **11** wherein said first registration feature is defined by one or more first steps, each having a first raised portion and a corresponding first recessed portion and said alignment features are defined by one or more second steps each having a second raised portion and a corresponding second recessed portion, and wherein said first raised portions are matingly engageable with said second recessed portions and said first recessed portions are matingly engageable with said second raised portions.

15. A cassette for dispensing flexible tubing and a receptacle for receiving said cassette as defined by claim **11** wherein said first registration features include a first undulating surface formed by said cassette bottom and said alignment features include a second undulating surface formed by said receptacle and wherein said first and second undulating surfaces are matingly engageable with one another.

16. A cassette for dispensing flexible tubing and a receptacle for receiving said cassette as defined by claim **11** wherein one of said first registration features and said alignment features includes a plurality of outwardly projecting ribs and the other of said first registration features and said alignment features includes a plurality of recesses, said ribs being matingly receivable in said recesses.

17. A cassette for dispensing flexible tubing and a receptacle for receiving said cassette as defined by claim **11** wherein said cassette and said receptacle each define a peripheral edge and one of said cassette bottom and said receptacle defines an annular raised area positioned internally of said peripheral edge and the other of said cassette bottom and said receptacle define an annular recessed portion positioned internally of said peripheral edge and wherein said annular raised portion is slidably engageable with said annular recessed portion.

* * * * *