May 4, 1965 G. J. BUBELIS 3,181,280

HAND-HELD COMBINED ROTARY AND RECIPROCABLE TOOL

Filed June 28, 1963

FIG. 1

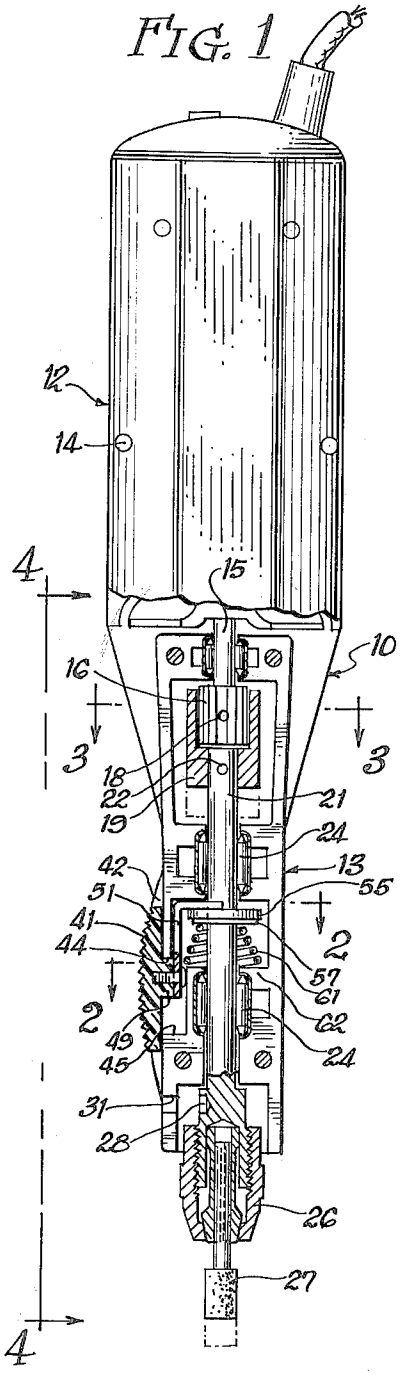

FIG. 2

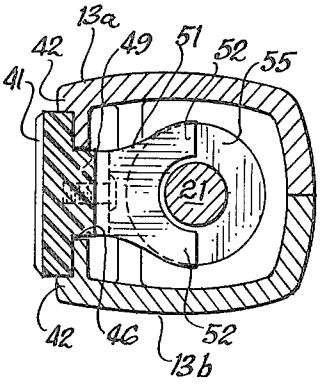

FIG. 3

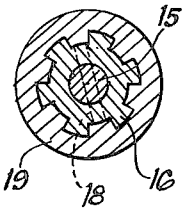

FIG. 4

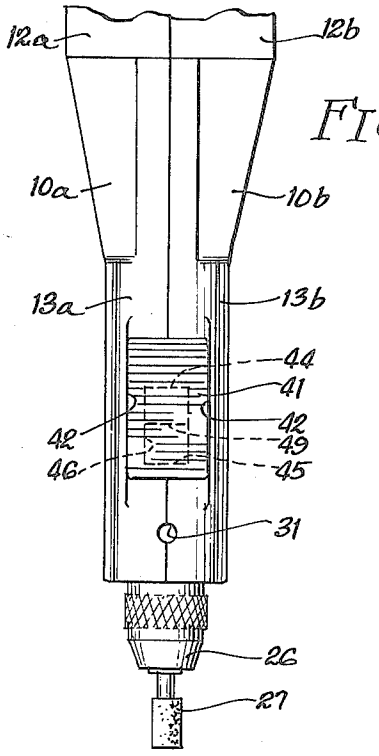

INVENTOR.
Gediminas J. Bubelis
BY
Leonard S. Knox
Att'y

United States Patent Office

3,181,280

Patented May 4, 1965

1

3,181,280
HAND-HELD COMBINED ROTARY AND RECIPROCABLE TOOL

Gediminas J. Bubelis, Chicago, Ill., assignor to Supreme Products Corporation, Chicago, Ill.

Filed June 28, 1963, Ser. No. 291,472
6 Claims. (Cl. 51—170)

This invention relates to rotary tools designed to be held in the hand for performing light cutting, abrading or polishing operations as in model-making, and in the fabrication of tools, dies, molds or similar articles in connection with which so-called free-hand performance is frequently resorted to.

Tools of the foregoing class are well known but in those hitherto known only simple rotation of the cutting, grinding or polishing implement is available. Frequently it is necessary to combine rotation of the tool with axially-reciprocating movement thereof, as for example, where a surface is to be free of scratch marks such as would result from simple rotation of the implement, or removal of material from the work piece is to be accelerated. Heretofore, the operator seeking such results has been obliged to reciprocate the entire tool and, in so doing, has difficulty controlling the stroke to follow the predetermined contour and to confine the action to a relatively small area. Moreover, the mental and physical effort thus involved is exhausing and vexatious.

The present invention relates to improvements in hand-held rotary tools wherein reciprocation of the spindle, and hence the implement secured thereto, may be accomplished through the medium of a digitally-actuated button completely under the control of the operator, in order that overrun of the stroke or failure to follow a contour, with consequent injury to the work, is precluded.

Another object is to provide a hand-held tool of the foregoing character in which the desired reciprocating action is achieved with minimum application of friction to the spindle.

A further object is to provide a hand-held tool of the character aforesaid in which the reciprocating feature is embodied in a simple, reliable manner at minimum cost.

An additional object is to provide a tool of the character stated in which the reciprocating stroke may be selected to be over any range within a maximum range for which the tool is designed.

Other objects and advantages of the invention will become apparent from the ensuing description which, taken with the accompanying drawing, discloses a preferred mode of carrying the principles of the invention into practice.

In this drawing:

FIG. 1 is a combined side elevation and longitudinal mid-section of a tool embodying the invention;

FIG. 2 is a cross-section taken on the line 2—2 of FIG. 1;

FIG. 3 is a cross-section taken on the line 3—3 of FIG. 1; and

FIG. 4 is a partial view taken in the direction of the arrows 4—4 of FIG. 1.

Broadly regarded, the invention comprises the incorporation, with the rotary output shaft of the power source, of a rotatable and reciprocable spindle on the outboard end of which is means, e.g., a chuck, for gripping the working implement such as a cutter, rotary file, grinding wheel, polishing wheel, etc. Means are provided for digitally shifting the spindle in one direction against the bias of a spring, this latter otherwise serving continuously to maintain the spindle non-reciprocatory. Thus, accurate control of shifting of the spindle is rendered possible as the operator is obliged to concentrate on only one direction of shift, and such direction is so selected

2

as to require thrust of the operator's thumb which is somewhat more easily controlled although, if desired, the parts may be rearranged in order that flexion of the thumb, rather than extension thereof may be relied upon. The maximum stroke is predetermined but the operator may select any stroke which is shorter, depending upon the work in hand, simply by controlling his thumb movement accordingly.

Thus, reverting to the drawing, there is shown a tool according to the invention comprising a combined framework **10** and housing portions **12** and **13**. These parts are desirably formed as mating halves **10***a*, **10***b*, **12***a*, **12***b* and **13***a*, **13***b* secured by screws or bolts **14**, all as is conventional, in order to render assembly and disassembly most convenient. The housing **12** contains a suitable source of power, e.g., an electric motor having an output shaft **15**, although an air motor or flexible shaft to an exterior power source may be availed of.

The shaft **15** carries one member **16**, e.g., the male member, of a splined coupling secured to the shaft **15**, e.g., as by a pin **19**. The female member **19** of the coupling is secured, as by a pin **22** to the spindle **21**, this latter being carried in anti-friction bearings **24** supported in suitable mating recesses in the housing halves **13***a* and **13***b*. At its outboard end the spindle carries a chuck or collet **26** of any known type to grip the implement **27**, e.g., a cutter, grinding wheel, rotary file or polishing wheel. In order to prevent rotation of the spindle while the chuck is being locked or unlocked, there is a recess **28** accessible through a bore **31** whereby a pin may be temporarily inserted into the recess **28**, as is well known.

Reciprocation of the spindle is through the medium of a button **41** slidable with respect to the housing portion **13** over some predetermined range, say ¼". Desirably, the button **41** is maintained in a path longitudinally of the tool by means of a pair of walls **42**—**42** engaged by the flat sides of the button. Travel of the button is limited by the ends **44** and **45** of a slot **46** in the housing portion **13**, it being apparent that each half **13***a*, **13***b* thereof contains one-half of the slot. The button has a boss **49** riding in the slot **46** and has an L-shaped actuator **51** pinned thereto (FIG. 2). The actuator is bifurcate, with arms **52**—**52** straddling the spindle **21**, in order that assembly of the parts may be facilitated. It will be noted that the effective points of application of force by the actuator arms are essentially in an axial plane. A thrust washer **55** surrounds the spindle **21** whereby force exerted through the button **41** is not evidenced as excessive friction on the spindle. The washer **55** is, in turn, maintained in operative position by an axially-fixed abutment, e.g., a backing ring **57**, which may be a split ring seized in the groove in the spindle or a flange forming an integral part of the spindle. Bias means, e.g., a compression spring **61** is interposed between the ring **57** and an abutment portion **62** of the framework constituted as matching halves, one associated with each housing portion **13***a* and **13***b*.

If desired, a freely-rotatable ball may be mounted in a suitable recess in each arm of the actuator **51**, or alternatively, the thrust washer **55** may be of the ball-bearing type.

From the foregoing it will have become evident that the spindle may be manually reciprocated by alternate application of, and release of pressure by the thumb resting on the button **41**, the spring **61** restoring the spindle as pressure is relieved. It will be understood that the button is so positioned that, when the housing portion **12** is gripped in the hand in the most comfortable position, the thumb may be extended and flexed without fatigue to provide the required reciprocation of the spindle; also, that when reciprocation is not desired, the force of the spring

61 will be such as to exert sufficient bias to maintain the tool 27 in its operative position notwithstanding drag of the implement 27 on the work. The spline coupling 16 and 19 is so arranged that, when fully engaged by reason of the spring 61, the chuck 26 is at the proper axial location, as shown.

If desired, the actuator 51, instead of being provided with furcations 52, may completely surround the spindle whereby thrust may be applied to the latter over a substantially larger area to reduce side loading of the spindle and easier control of reciprocation.

While I have shown a particular embodiment of my invention, it will be understood, of course, that I do not wish to be limited thereto since many modifications may be made and I, therefore, contemplate by the appended claims to cover any such modifications as fall within the true spirit and scope of my invention.

I claim:

1. A hand-held tool comprising a framework, powered means supported on said framework providing a rotary output, a spindle mounted on said framework for combined rotary and reciprocating movement over a predetermined stroke, means at one end of said spindle coupling the same to said output for said combined movement, means at the opposite end of the spindle to hold an implement to be applied to the work piece, an abutment axially fixed on said spindle, a digitally-operable button movable between two positions mounted on said framework, an actuator providing an operative connection between said button and spindle abutment, bias means intermediate said abutment and framework normally urging said spindle to one limit of its stroke, the actuation of said actuator shifting said spindle toward the other end of its stroke against said bias means to impart reciprocating movement to said implement during rotation thereof.

2. The combination in accordance with claim 1 wherein said actuator comprises a bifurcated portion straddling said spindle and said abutment is an annulus encircling said spindle.

3. The combination in accordance with claim 2 further characterized in that a thrust washer is interposed between said actuator portion and annulus.

4. The combination in accordance with claim 1 wherein said abutment comprises a radially-extending flange on said spindle and said actuator comprises a portion providing pressure on said flange along a plane which passes essentially through the rotational axis of the spindle.

5. The combination in accordance with claim 4 further characterized by the provision of anti-friction means intermediate said flange and said actuator portion.

6. A hand-held power-driven tool comprising a framework, means on said framework to connect the tool to a source of power, a spindle mounted on said framework for combined rotary and reciprocating movement over a predetermined stroke, means at one end of said spindle coupling the same to said first means for said combined movement, means at the opposite end of the spindle to hold an implement to be applied to the work piece, an abutment axially fixed on said spindle, a digitally-operable button movable between two positions mounted on said framework, an actuator providing an operative connection between said button and spindle abutment, bias means intermediate said abutment and framework normally urging said spindle to one limit of its stroke, the actuation of said actuator shifting said spindle toward the other end of its stroke against said bias means to impart reciprocating movement to said implement during rotation thereof.

References Cited by the Examiner

UNITED STATES PATENTS

1,673,012	6/28	Meunier	51—170 X
1,787,999	1/31	Schultz	81—57
1,802,078	4/31	Exley	51—170
2,108,029	2/38	Connor	51—34.9 X
2,200,573	5/40	Connor	51—34.9
2,227,697	1/41	Blood	51—34.9
2,992,520	7/61	Kish	51—177 X

FOREIGN PATENTS

926,752	4/47	France.
840,805	6/52	Germany.

LESTER M. SWINGLE, *Primary Examiner.*

JOHN C. CHRISTIE, *Examiner.*